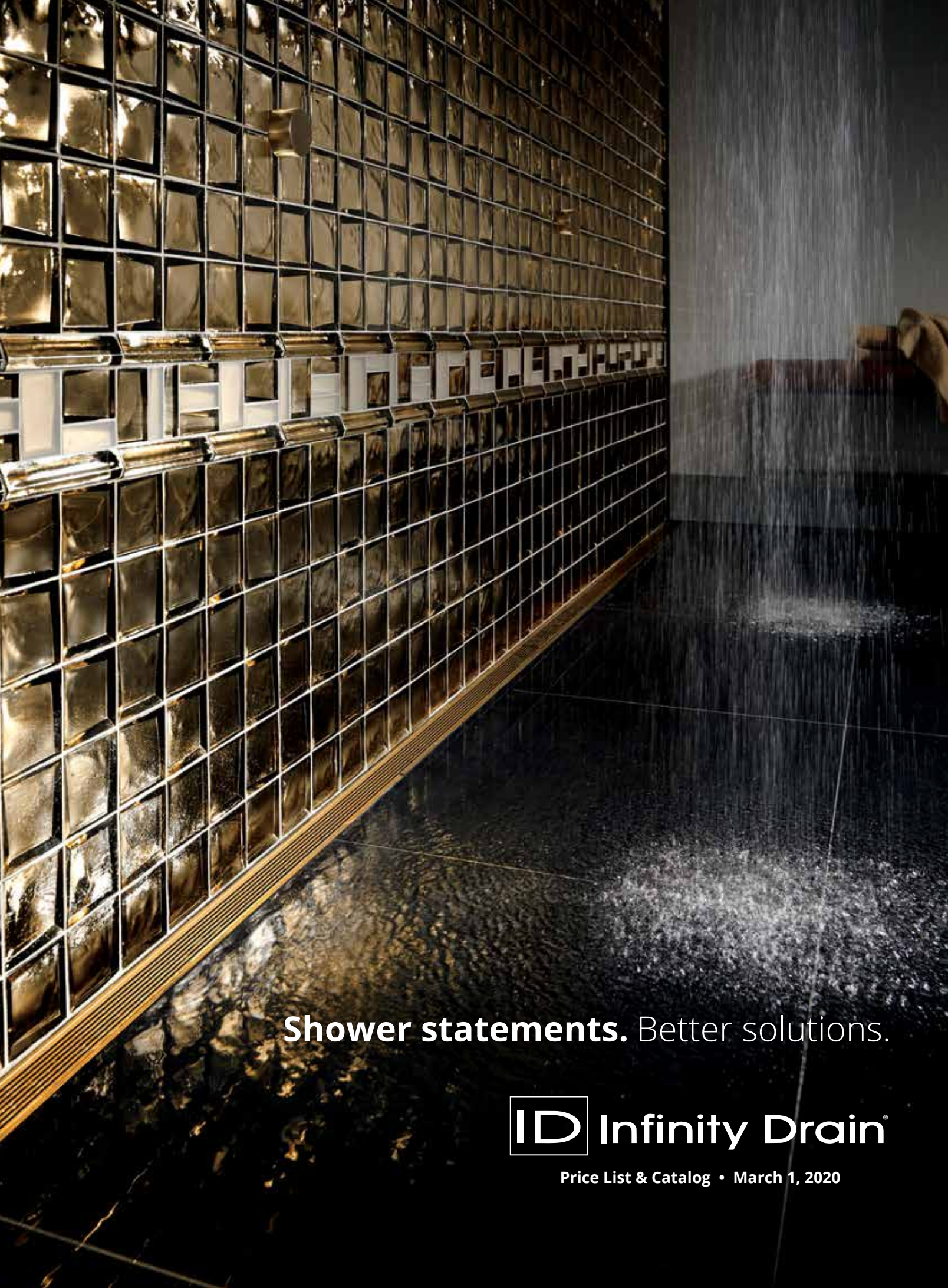

Shower statements. Better solutions.

ID Infinity Drain®

Price List & Catalog • March 1, 2020

Hand crafted and designed to exacting standards.

FFTIF 65 Tile Insert Frame (tile not included)

Linear Drains

GRATE STYLES

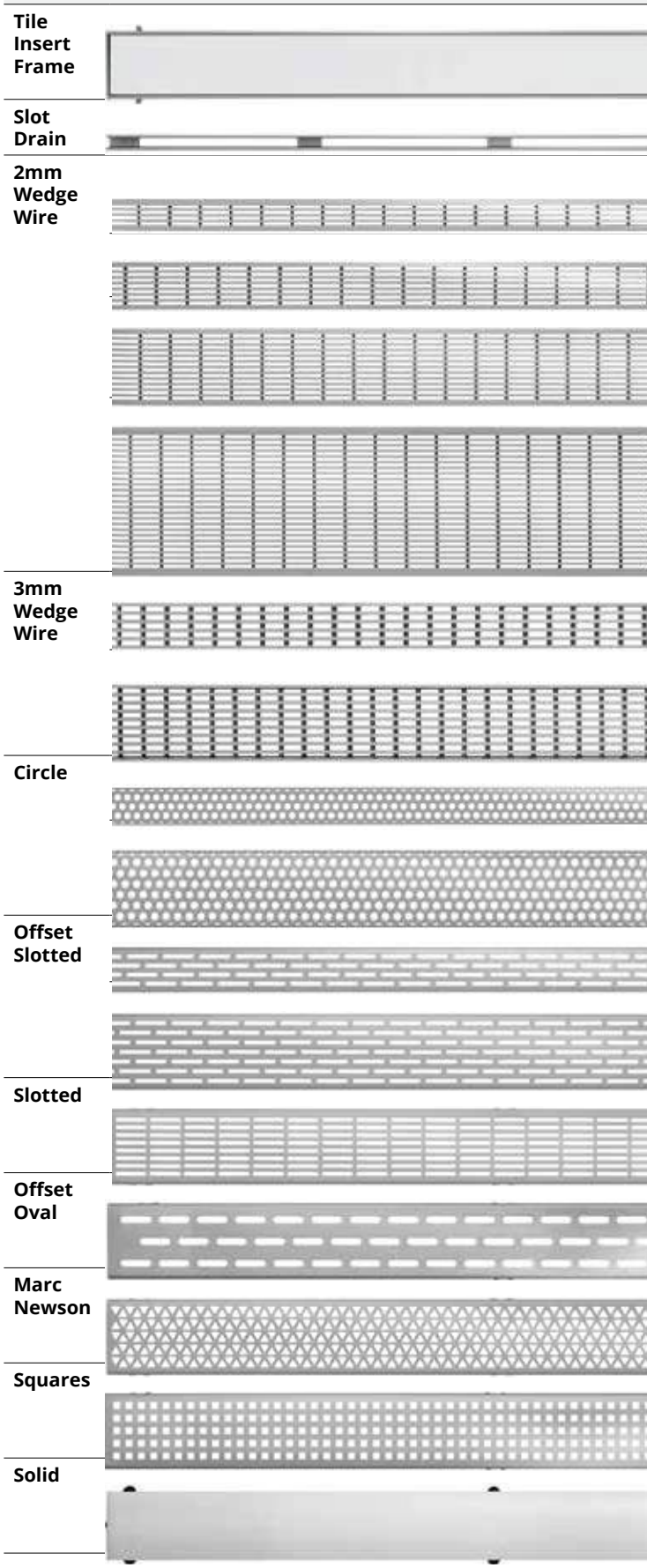

LINEAR DRAIN STYLE REFERENCE CHART

	Site Sizable [S]	Fixed Length [FX]	Fixed Flange [FF]	Side Outlet [FT]	Flange with Schluter® Kerdi [FCS]	Double Waterproofing [FCB]	Universal [U]
	Traditional Waterproofing		Liquid / Fabric Waterproofing		Schluter® Kerdi Waterproofing	Traditional ***and*** Liquid/Fabric	Traditional ***or*** Liquid/Fabric
	S-TIF 65 (pg 21) S-LTIF 65 (pg 22) S-TIFAS 65 (pg 29) S-TIFAS 99 (pg 30)	FXTIF 65 (pg 35)	FFTIF 65 (pg 39)	FTTIF 65 (pg 57)	FCSTIF 65 (pg 45)	FCBTIF 65 (pg 51)	UTIF (pg 62)
			FFST (pg 42)		FCSST (pg 48)	FCBST (pg 54)	
			FFAS 25 (pg 41)		FCSAS 25 (pg 47)	FCBAS 25 (pg 53)	
	S-LAG 38 (pg 14)						
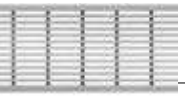	S-LAG 65 (pg 16) S-AS 65 (pg 27) S-AS 99 (pg 28)	FXAS 65 (pg 35)	FFAS 65 (pg 40)	FTAS 65 (pg 58)	FCSAS 65 (pg 46)	FCBAS 65 (pg 52)	
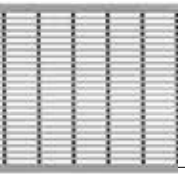	S-AG 100 (pg 23)	FXAS 125 (pg 36)	FFAS 125 (pg 41)		FCSAS 125 (pg 47)		
	S-AG 38 (pg 13)						
	S-AG 65 (pg 15)						
	S-DG 38 (pg 17)						
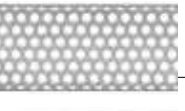	S-DG 65 (pg 19) S-DGAS 65 (pg 25) S-DGAS 99 (pg 26)						
	S-LT 38 (pg 18)						
	S-LT 65 (pg 20)						
		FXIG 65 (pg 34)	FFIG 65 (pg 38)	FTIG 65 (pg 56)	FCSIG 65 (pg 44)	FCBIG 65 (pg 50)	
		FXED 65 (pg 33)	FFED 65 (pg 37)	FTED 65 (pg 55)	FCSED 65 (pg 43)	FCBED 65 (pg 49)	
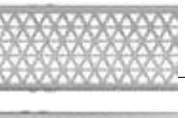		FXMN 65 (pg 33)	FFMN 65 (pg 37)	FTMN 65 (pg 55)	FCSMN 65 (pg 43)	FCBMN 65 (pg 49)	
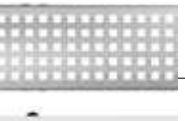							USQ (pg 61)
		FXSG 65 (pg 34)	FFSG 65 (pg 38)	FTSG 65 (pg 56)	FCSSG 65 (pg 44)	FCBSG 65 (pg 50)	

All products available in Satin Stainless, Polished Stainless, Oil Rubbed Bronze, Satin Bronze, and Matte Black. Custom finishes available.

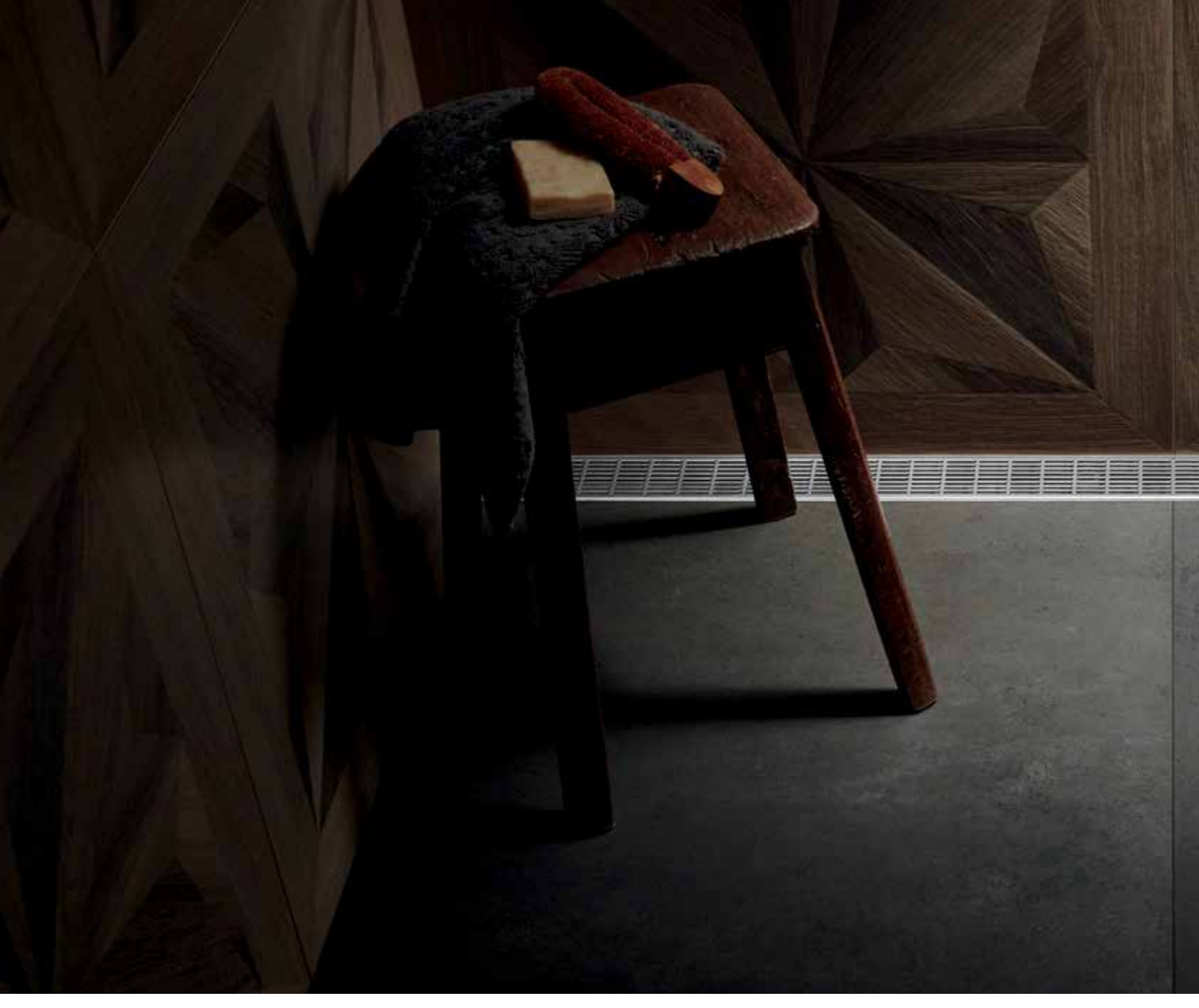

About Us

Why we do what we do. It's not about making linear or center drains — it's much bigger than that, with a more holistic perspective. It's about making a small difference in people's lives every day. Be it a power shower or a relaxing bath, we help create an environment to appreciate and be indulgent in. It's offering distinct details that combine to provide a more pleasing experience… stress free and without water management issues. Making one feel good about their bath surroundings whether staying at a boutique hotel, a towering luxury hotel, or one's own home. Infinity Drain, it's the complete package of very functional and yet, exquisitely beautiful.

Our Brand

Infinitely different. It's personal. We don't punch steel, we pursue passion, in every individual we hire, in every product we craft. The result — we call it the brand elevation factor. Whether that's artisans sculpting carefully considered flourishes, engineers striving for nano tolerances, or those who quality

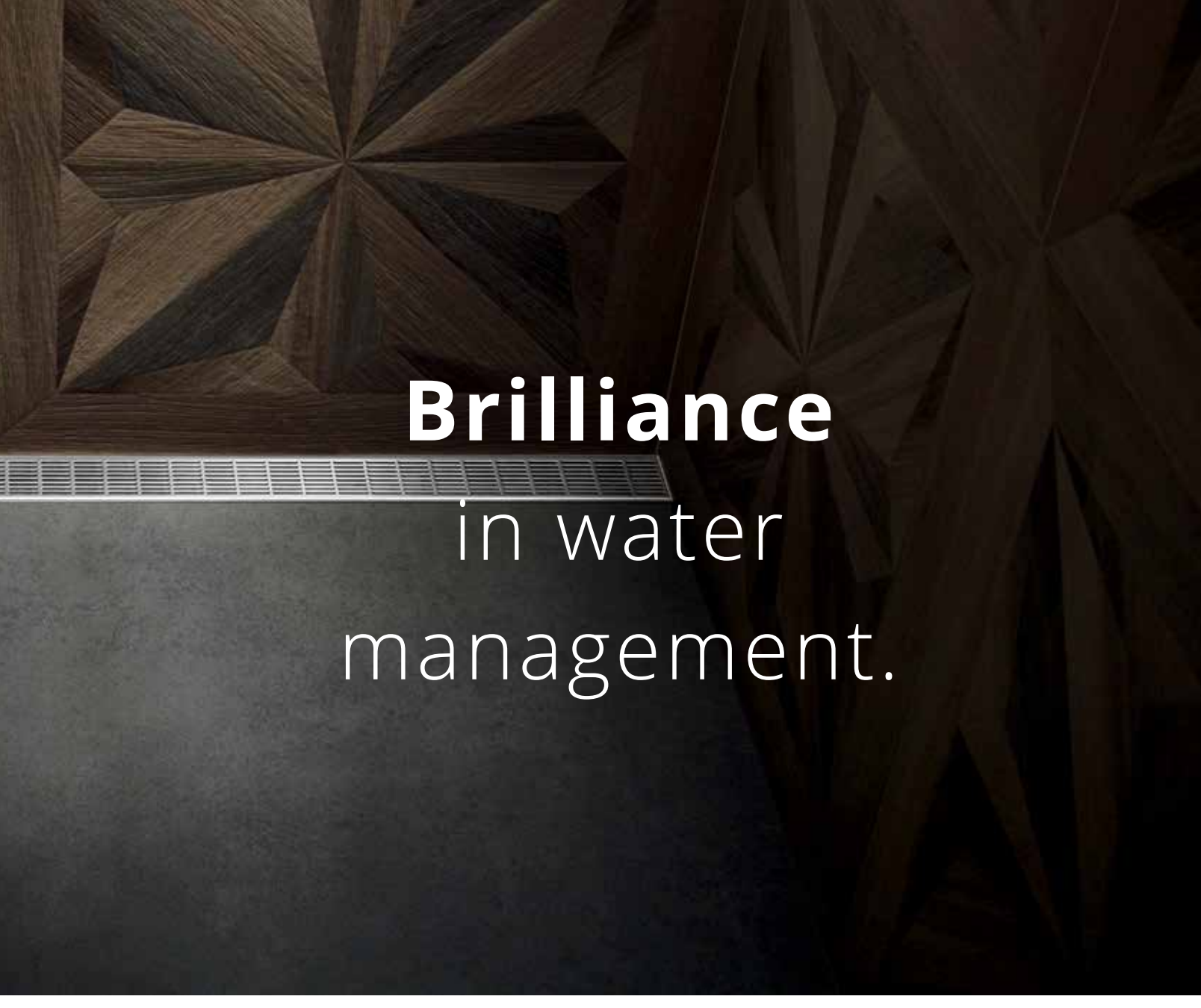

control and wrap each product, we believe that before the Infinity Drain logo is adorned, our higher standards of craftsmanship, care and devotion must go into it. With a rich resource of styles, finish options and size customization, design flexibility is built right in. And all offered with benchmark reliability. Simply put, it's our passion for design and our obsession for performance.

Made in the USA

A refreshing perspective on — *We're here for you.*

Infinity Drain both designs and manufactures all our products in the United States. But we take it a step further by sourcing our raw materials from U.S. suppliers. This means faster turnaround, consistency in material, reliability in quality and a focus on your project first hand. All without worrying about unnecessary shipping and waiting. Our facility and atelier is in the heart of Long Island, New York. And we wouldn't have it any other way. You see, craftsmanship is born here. Service is born here. Discover the finest drains and waterproofing products here… in America, for you.

CONTENTS

Linear Drains

New Products **09-10**

[S] SERIES - PVC
Site Sizable PVC Series

Site Sizable® PVC (S) **11-23**
- S-AG 38 13
- S-AG 65 15
- S-DG 38 17
- S-DG 65 19
- S-TIF 65 21

NEW **Site Sizable® PVC Low Profile (S)**
- S-LAG 38 14
- S-LAG 65 16
- S-LT 38 18
- S-LT 65 20
- S-LTIF 65 22
- S-AG 100 23

[S] SERIES - STAINLESS STEEL
Site Sizable® Stainless Steel Series

Site Sizable® Stainless Steel (S) **24-30**
- S-DGAS 65 25
- S-AS 65 27
- S-TIFAS 65 29

Site Sizable® Stainless Steel High Flow (S)
- S-AS 99 28
- S-DGAS 99 26
- S-TIFAS 99 30

[FX] SERIES
Fixed Length Series

Fixed Series (FX) **31-36**
- FXED 65 33
- FXMN 65 33
- FXAS 65 35
- FXIG 65 34
- FXSG 65 34
- FXTIF 65 35
- FXAS 125 36

[FF] SERIES
Fixed Flange Series

Fixed Flange Series (FF) **37-42**
- FFED 65 37
- FFMN 65 37
- FFAS 65 40
- FFIG 65 38
- FFSG 65 38
- FFTIF 65 39
- NEW FFST 42
- FFAS 25 41
- FFAS 125 41

Linear Drains

[FT] SERIES
Side Outlet Series

Side Outlet Series (FT) **55-58**
- FTED 65 55
- FTMN 65 55
- FTAS 65 58
- FTIG 65 56
- FTSG 65 56
- FTTIF 65 57

[FCS] SERIES
Flange with Schluter® Kerdi Series

NEW **Fixed Flange Series with Kerdi (FCS)** **43-48**
- FCSED 65 43
- FCSMN 65 43
- FCSAS 65 46
- FCSIG 65 44
- FCSSG 65 44
- FCSTIF 65 45
- FCSST 48
- FCSAS 25 47
- FCSAS 125 47

[FCB] SERIES
Double Waterproofing Series

NEW **Double Waterproofing Series (FCB)** **49-54**
- FCBED 65 49
- FCBMN 65 49
- FCBAS 65 52
- FCBIG 65 50
- FCBSG 65 50
- FCBTIF 65 51
- FCBST 54
- FCBAS 25 53

[U] SERIES
Universal Infinity Drain™

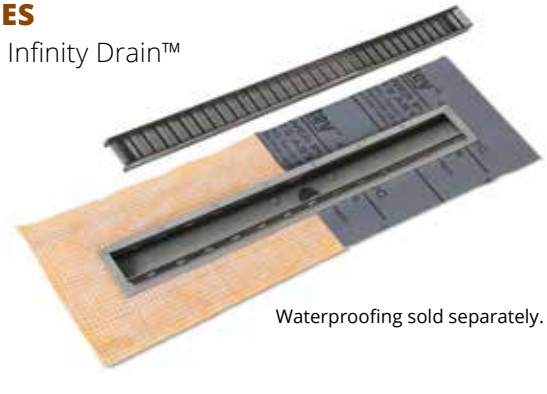

Waterproofing sold separately.

NEW **Universal Infinity Drain™ Series (U)** **59-62**
- USQ 61
- UTIF 60

Center Drains

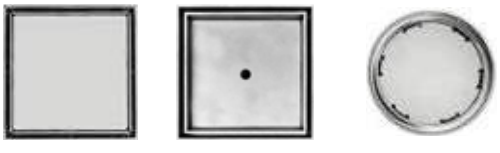

Tile Drain Series **63-68**
- LTD 5 65
- TD 15 66
- TD 20 67
- RTD 15 68

Criss Cross Series **69-70**
- XD 4 69
- XD 5 70

Squares Series **71-73**
- QD 4 71
- QD 5 72
- RQD 5 73

Moor Series **74-76**
- RMD 5 74
- MD 4 75
- MD 5 76

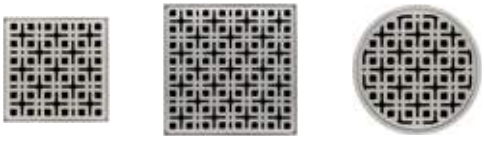

Link Series **77-79**
- KD 4 77
- KD 5 78
- RKD 5 79

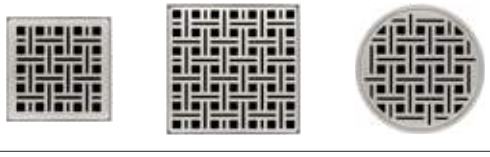

Weave Series **80-82**
- RVD 5 80
- VD 4 81
- VD 5 82

Lines Series **83-85**
- ND 4 83
- ND 5 84
- RND 5 85

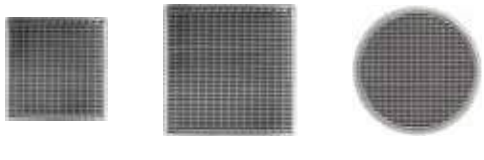

Wedge Wire Series **86-88**
- RW 5 86
- WD 4 87
- WD 5 88

More Options Custom Solutions

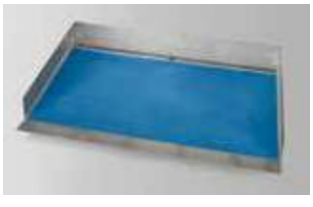

Stainless Steel Shower Bases **89-97**

NEW Linear Shower Bases (BL) 95-97

NEW Center Shower Bases (BC). 91-94

Other Applications **98-104**

Outdoor. 99-100

Lavatory/ Sink. 101

Communal Showers. 102

Folding/ Sliding Door System. 103

Healthcare 104

Custom **105-111**

Components **112-136**

Drain Bodies and Bonded Flanges. **137-138**

Parts **139-140**

Displays **141-142**

SKU Explanation **143**

Icon Explanation **144**

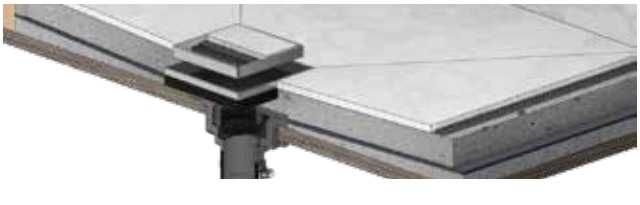

Installation **145-166**

Linear Drain Guide **167-175**

Glossary **176-179**

Terms and Conditions **180-188**

Alpha Numeric Price Sheet & Index. . . . **189-238**

NEW PRODUCTS

Low Profile Site Sizable® Linear Drain (page 14,16,18)

Slot Linear Drain (page 18,20,22)

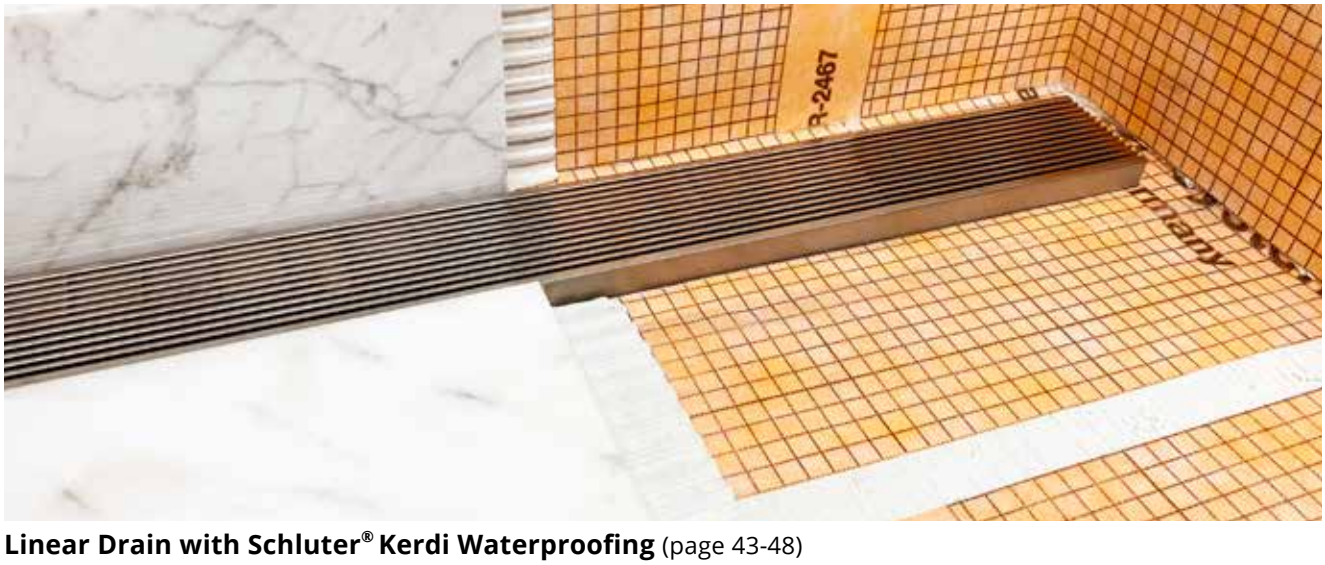

Linear Drain with Schluter® Kerdi Waterproofing (page 43-48)

NEW NEW PRODUCTS

Universal Infinity Drain™ - Compatible with traditional or liquid/fabric waterproofing (page 60-62)

Stainless Steel Shower Base - Linear Drain (page 95-97)

Stainless Steel Shower Base - Center Drain (page 91-94)

Site Sizable Linear Drains With PVC Channels

I need it yesterday. Site sizable drains offers multiple length, width, floor height and outlet placement options ready to be used as is, or modified on-site. It's beauty above the surface and smart solutions below.

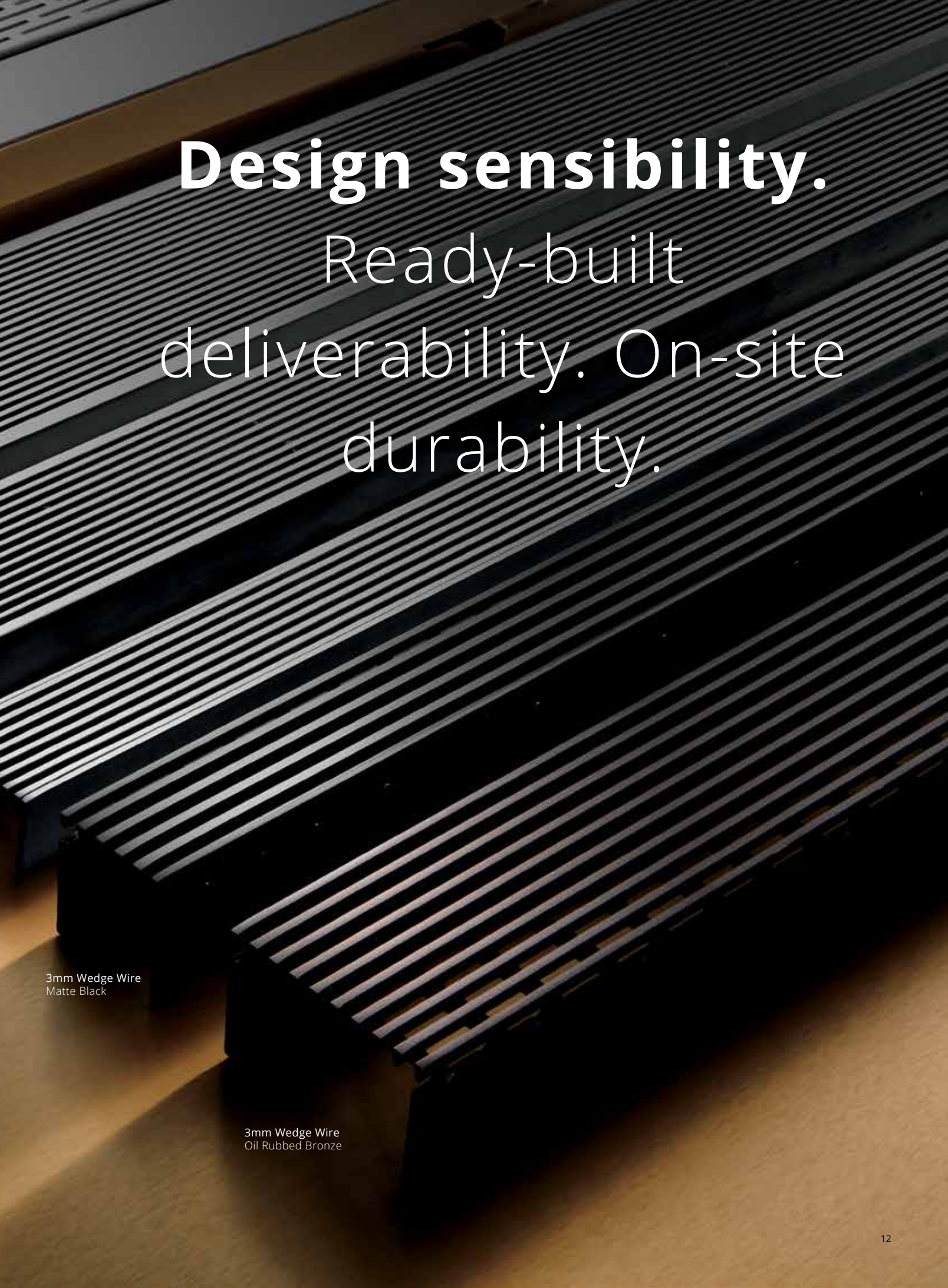

Design sensibility.

Ready-built deliverability. On-site durability.

3mm Wedge Wire
Matte Black

3mm Wedge Wire
Oil Rubbed Bronze

S-AG 38

Site Sizable® PVC Channel
3mm Wedge Wire Stainless Steel Grate

T
TRADITIONAL WATERPROOFING

SITE SIZABLE®

Specifications	
Grate Material:	316L Stainless Steel
Channel Material:	PVC
Overall Width:	1 7/8"
Minimum Height:	2 1/8"
Flow Rate:	9 GPM

CUT TO LENGTH, LOCATE OUTLET ANYWHERE ON CHANNEL

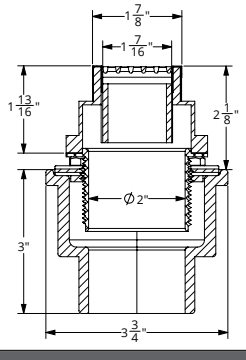

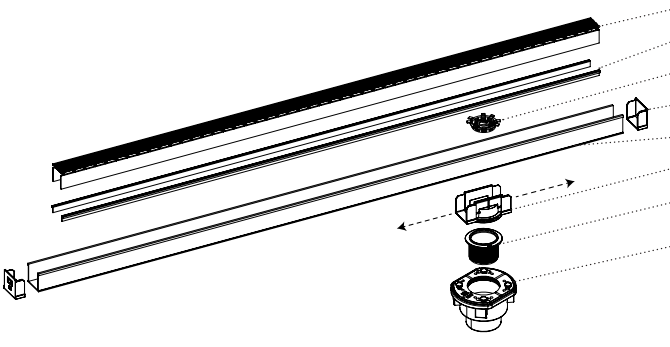

- **A 38** - Wedge Wire Grate
- **CT** - Channel Trim
- **HS 2** - Hair Strainer
- **E 38** - PVC Stop End
- **G 38** - PVC Channel (ships as one piece)
- **S 32** - PVC Outlet Section
- **S 50** - PVC Threaded Outlet
- 2 inch clamp down drain assembly **Not included in kit SKU.** (Material can be Cast Iron, ABS, or PVC)

New channel spacer/mud guard included

Description	Model	Finish	Lbs	List
36" Complete Kit Includes: (36 1/8" L x 1 7/8" W x 1 9/16" H) 1 - A 3836 Grate 1 - G 3836 PVC Channel 2 - E 38 PVC Stop End 1 - S 32 PVC Outlet Section 1 - CS 3836 Channel Spacer 1 - S 50 PVC Threaded Outlet 2 - CT 36 Channel Trim 1 - HS 2 Hair Strainer 1 - AKEY Lift Out Key	**S-AG 3836 SS**	Satin Stainless	7	$620
	S-AG 3836 PS	Polished Stainless		$780
	S-AG 3836 ORB	Oil Rubbed Bronze		$780
	S-AG 3836 SB	Satin Bronze		$780
	S-AG 3836 BK	Matte Black		$780
48" Complete Kit Includes: (48 1/8" L x 1 7/8" W x 1 9/16" H) 1 - A 3848 Grate 1 - G 3848 PVC Channel 2 - E 38 PVC Stop End 1 - S 32 PVC Outlet Section 1 - CS 3848 Channel Spacer 1 - S 50 PVC Threaded Outlet 2 - CT 48 Channel Trim 1 - HS 2 Hair Strainer 1 - AKEY Lift Out Key	**S-AG 3848 SS**	Satin Stainless	9	$665
	S-AG 3848 PS	Polished Stainless		$840
	S-AG 3848 ORB	Lifetime Oil Rubbed Bronze		$840
	S-AG 3848 SB	Satin Bronze		$840
	S-AG 3848 BK	Matte Black		$840
60" Complete Kit Includes: (60 1/8" L x 1 7/8" W x 1 9/16" H) 1 - A 3860 Grate 1 - G 3860 PVC Channel 2 - E 38 PVC Stop End 1 - S 32 PVC Outlet Section 1 - CS 3860 Channel Spacer 1 - S 50 PVC Threaded Outlet 2 - CT 60 Channel Trim 1 - HS 2 Hair Strainer 1 - AKEY Lift Out Key	**S-AG 3860 SS**	Satin Stainless	11	$855
	S-AG 3860 PS	Polished Stainless		$1000
	S-AG 3860 ORB	Lifetime Oil Rubbed Bronze		$1000
	S-AG 3860 SB	Satin Bronze		$1000
	S-AG 3860 BK	Matte Black		$1000
72" Complete Kit Includes: (72 1/8" L x 1 7/8" W x 1 9/16" H) 1 - A 3872 Grate 1 - G 3872 PVC Channel 2 - E 38 PVC Stop End 2 - S 32 PVC Outlet Section 1 - CS 3872 Channel Spacer 2 - S 50 PVC Threaded Outlet 2 - CT 72 Channel Trim 2 - HS 2 Hair Strainer 1 - AKEY Lift Out Key	**S-AG 3872 SS**	Satin Stainless	18	$1060
	S-AG 3872 PS	Polished Stainless		$1375
	S-AG 3872 ORB	Lifetime Oil Rubbed Bronze		$1375
	S-AG 3872 SB	Satin Bronze		$1375
	S-AG 3872 BK	Matte Black		$1375
	(Two outlets)			
96" Complete Kit Includes: (96 1/8" L x 1 7/8" W x 1 9/16" H) 2 - A 3848 Grate 1 - G 3896 PVC Channel 2 - E 38 PVC Stop End 2 - S 32 PVC Outlet Section 1 - CS 3896 Channel Spacer 2 - S 50 PVC Threaded Outlet 2 - CT 96 Channel Trim 2 - HS 2 Hair Strainer 1 - AKEY Lift Out Key	**S-AG 3896 SS**	Satin Stainless	22	$1335
	S-AG 3896 PS	Polished Stainless		$1660
	S-AG 3896 ORB	Lifetime Oil Rubbed Bronze		$1660
	S-AG 3896 SB	Satin Bronze		$1660
	S-AG 3896 BK	Matte Black		$1660
	(Two outlets)			

CDIH 22

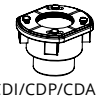
CDI/CDP/CDA 22

Drain Body **not** included in kit SKU. If not provided, add...

CDI 22 - Cast Iron 2" throat, 2" no hub connect	4	$65
CDIH 22 - (For Hot Mop) Cast Iron 2" throat, 2" no hub connect	4	$65
CDA 22 - ABS 2" throat, 2" standard connect	2	$50
CDP 22 - PVC 2" throat, 2" standard connect	2	$50

*See page 169 for more information on flow rates. • See page 113 for individual components. • See page 224 for shipping information.

T
TRADITIONAL WATERPROOFING

SITE SIZABLE®

LOW PROFILE

NEW S-LAG 38

Site Sizable® PVC Channel
2mm Wedge Wire Stainless Steel Grate

Specifications	
Grate Material:	316L Stainless Steel
Channel Material:	PVC
Overall Width:	1 15/16"
Minimum Height:	1 1/2"
Flow Rate:	9 GPM

CUT TO LENGTH, LOCATE OUTLET ANYWHERE ON CHANNEL

NEW LOWER HEIGHT

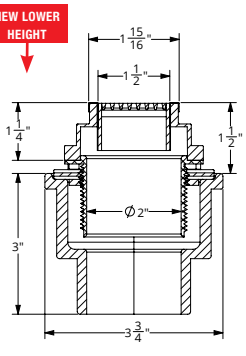

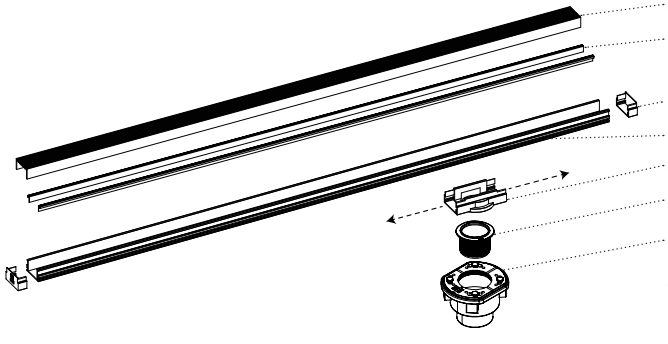

SA 38 - Wedge Wire Grate
CT - Channel Trim
EL 38 - PVC Stop End
GL 38 - PVC Channel (ships as one piece)
SL 32 - PVC Outlet Section
S 50 - PVC Threaded Outlet
2 inch clamp down drain assembly
Not included in kit SKU.
(Material can be Cast Iron, ABS, or PVC)

New channel spacer/mud guard included

Description	Model	Finish	Lbs	List
36" Complete Kit Includes: (36 1/8" L x 1 15/16" W x 1" H) 1 - SA 3836 Grate; 1 - GL 3836 PVC Channel; 2 - EL 38 PVC Stop End; 1 - SL 32 PVC Outlet Section; 1 - CS 3836 Channel Spacer; 1 - S 50 PVC Threaded Outlet; 2 - CT 36 Channel Trim; 1 - AKEY Lift Out Key	**S-LAG 3836 SS**	Satin Stainless	7	$620
	S-LAG 3836 PS	Polished Stainless		$780
	S-LAG 3836 ORB	Oil Rubbed Bronze		$780
	S-LAG 3836 SB	Satin Bronze		$780
	S-LAG 3836 BK	Matte Black		$780
48" Complete Kit Includes: (48 1/8" L x 1 15/16" W x 1" H) 1 - SA 3848 Grate; 1 - GL 3848 PVC Channel; 2 - EL 38 PVC Stop End; 1 - SL 32 PVC Outlet Section; 1 - CS 3848 Channel Spacer; 1 - S 50 PVC Threaded Outlet; 2 - CT 48 Channel Trim; 1 - AKEY Lift Out Key	**S-LAG 3848 SS**	Satin Stainless	9	$665
	S-LAG 3848 PS	Polished Stainless		$840
	S-LAG 3848 ORB	Oil Rubbed Bronze		$840
	S-LAG 3848 SB	Satin Bronze		$840
	S-LAG 3848 BK	Matte Black		$840
60" Complete Kit Includes: (60 1/8" L x 1 15/16" W x 1" H) 1 - SA 3860 Grate; 1 - GL 3860 PVC Channel; 2 - EL 38 PVC Stop End; 1 - SL 32 PVC Outlet Section; 1 - CS 3860Channel Spacer; 1 - S 50 PVC Threaded Outlet; 2 - CT 60 Channel Trim; 1 - AKEY Lift Out Key	**S-LAG 3860 SS**	Satin Stainless	11	$855
	S-LAG 3860 PS	Polished Stainless		$1000
	S-LAG 3860 ORB	Oil Rubbed Bronze		$1000
	S-LAG 3860 SB	Satin Bronze		$1000
	S-LAG 3860BK	Matte Black		$1000
72" Complete Kit Includes: (72 1/8" L x 1 15/16" W x 1" H) 1 - SA 3872 Grate; 1 - GL 3872 PVC Channel; 2 - EL 38 PVC Stop End; 2 - SL 32 PVC Outlet Section; 1 - CS 3872 Channel Spacer; 2 - S 50 PVC Threaded Outlet; 2 - CT 72 Channel Trim; 1 - AKEY Lift Out Key	**S-LAG 3872 SS**	Satin Stainless	18	$1060
	S-LAG 3872 PS	Polished Stainless		$1375
	S-LAG 3872 ORB	Oil Rubbed Bronze		$1375
	S-LAG 3872 SB	Satin Bronze		$1375
	S-LAG 3872 BK (Two outlets)	Matte Black		$1375
96" Complete Kit Includes: (96 1/8" L x 1 15/16" W x 1" H) 2 - SA 3848 Grate; 1 - GL 3896 PVC Channel; 2 - EL 38 PVC Stop End; 2 - SL 32 PVC Outlet Section; 1 - CS 3896 Channel Spacer; 2 - S 50 PVC Threaded Outlet; 2 - CT 96 Channel Trim; 1 - AKEY Lift Out Key	**S-LAG 3896 SS**	Satin Stainless	22	$1335
	S-LAG 3896 PS	Polished Stainless		$1660
	S-LAG 3896 ORB	Oil Rubbed Bronze		$1660
	S-LAG 3896 SB	Satin Bronze		$1660
	S-LAG 3896 BK (Two outlets)	Matte Black		$1660
CDIH 22 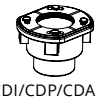 CDI/CDP/CDA 22	Drain Body **not** included in kit SKU If not provided, add...	**CDI 22** - Cast Iron 2" throat, 2" no hub connect	4	$65
		CDIH 22 - (For Hot Mop) Cast Iron 2" throat, 2" no hub connect	4	$65
		CDA 22 - ABS 2" throat, 2" standard connect	2	$50
		CDP 22 - PVC 2" throat, 2" standard connect	2	$50

*See page 169 for more information on flow rates. • See page 114 for individual components. • See page 228 for shipping information.

S-AG 65

Site Sizable® PVC Channel
3mm Wedge Wire Stainless Steel Grate

T
TRADITIONAL WATERPROOFING

SITE SIZABLE®

Specifications	
Grate Material:	316L Stainless Steel
Channel Material:	PVC
Overall Width:	2 15/16"
Minimum Height:	1 5/16"
Flow Rate:	9 GPM

CUT TO LENGTH, LOCATE OUTLET ANYWHERE ON CHANNEL

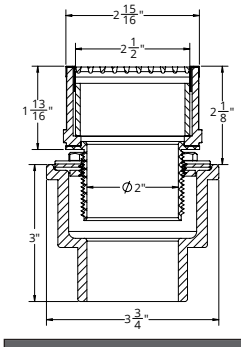

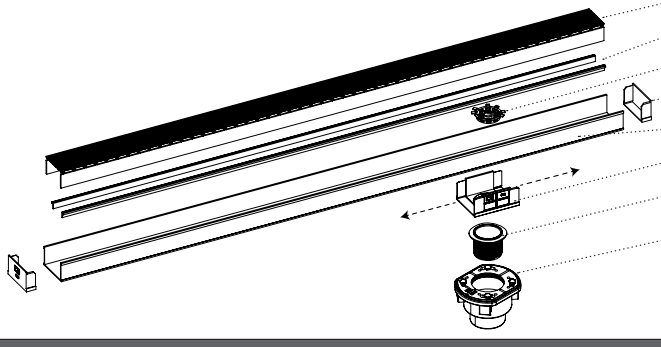

A 65 - Wedge Wire Grate
CT - Channel Trim
HS 2 - Hair Strainer
E 65 - PVC Stop End
G 65 - PVC Channel (ships as one piece)
S 65 - PVC Outlet Section
S 50 - PVC Threaded Outlet
2 inch clamp down drain assembly
Not included in kit SKU.
(Material can be Cast Iron, ABS, or PVC)

New channel spacer/mud guard included

Description	Model	Finish	Lbs	List
36" Complete Kit Includes: (36 1/8" L x 2 15/16" W x 1 11/16" H) 1 - A 6536 Grate 1 - G 6536 PVC Channel 2 - E 65 PVC Stop End 1 - S 65 PVC Outlet Section 1 - CS 6536 Channel Spacer 1 - S 50 PVC Threaded Outlet 2 - CT 36 Channel Trim 1 - HS 2 Hair Strainer 1 - AKEY Lift Out Key	**S-AG 6536 SS** **S-AG 6536 PS** **S-AG 6536 ORB** **S-AG 6536 SB** **S-AG 6536 BK**	Satin Stainless Polished Stainless Oil Rubbed Bronze Satin Bronze Matte Black	7	$855 $1020 $1020 $1020 $1020
48" Complete Kit Includes: (48 1/8" L x 2 15/16" W x 1 11/16" H) 1 - A 6548 Grate 1 - G 6548 PVC Channel 2 - E 65 PVC Stop End 1 - S 65 PVC Outlet Section 1 - CS 6548 Channel Spacer 1 - S 50 PVC Threaded Outlet 2 - CT 48 Channel Trim 1 - HS 2 Hair Strainer 1 - AKEY Lift Out Key	**S-AG 6548 SS** **S-AG 6548 PS** **S-AG 6548 ORB** **S-AG 6548 SB** **S-AG 6548 BK**	Satin Stainless Polished Stainless Lifetime Oil Rubbed Bronze Satin Bronze Matte Black	9	$910 $1075 $1075 $1075 $1075
60" Complete Kit Includes: (60 1/8" L x 2 15/16" W x 1 11/16" H) 1 - A 6560 Grate 1 - G 6560 PVC Channel 2 - E 65 PVC Stop End 1 - S 65 PVC Outlet Section 1 - CS 6560 Channel Spacer 1 - S 50 PVC Threaded Outlet 2 - CT 60 Channel Trim 1 - HS 2 Hair Strainer 1 - AKEY Lift Out Key	**S-AG 6560 SS** **S-AG 6560 PS** **S-AG 6560 ORB** **S-AG 6560 SB** **S-AG 6560 BK**	Satin Stainless Polished Stainless Lifetime Oil Rubbed Bronze Satin Bronze Matte Black	11	$1075 $1185 $1185 $1185 $1185
72" Complete Kit Includes: (72 1/8" L x 2 15/16" W x 1 11/16" H) 1 - A 6572 Grate 1 - G 6572 PVC Channel 2 - E 65 PVC Stop End 2 - S 65 PVC Outlet Section 1 - CS 6572 Channel Spacer 2 - S 50 PVC Threaded Outlet 2 - CT 72 Channel Trim 2 - HS 2 Hair Strainer 1 - AKEY Lift Out Key	**S-AG 6572 SS** **S-AG 6572 PS** **S-AG 6572 ORB** **S-AG 6572 SB** **S-AG 6572 BK** (Two outlets)	Satin Stainless Polished Stainless Lifetime Oil Rubbed Bronze Satin Bronze Matte Black	18	$1450 $1585 $1585 $1585 $1585
96" Complete Kit Includes: (96 1/8" L x 2 15/16" W x 1 11/6" H) 2 - A 6548 Grate 1 - G 6596 PVC Channel 2 - E 65 PVC Stop End 2 - S 65 PVC Outlet Section 1 - CS 6596 Channel Spacer 2 - S 50 PVC Threaded Outlet 2 - CT 96 Channel Trim 2 - HS 2 Hair Strainer 1 - AKEY Lift Out Key	**S-AG 6596 SS** **S-AG 6596 PS** **S-AG 6596 ORB** **S-AG 6596 SB** **S-AG 6596 BK** (Two outlets)	Satin Stainless Polished Stainless Lifetime Oil Rubbed Bronze Satin Bronze Matte Black	22	$1820 $2140 $2140 $2140 $2140

CDIH 22

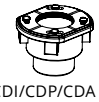
CDI/CDP/CDA 22

Drain Body **not** included in kit SKU. If not provided, add...

CDI 22 - Cast Iron 2" throat, 2" no hub connect	4	$65
CDIH 22 - (For Hot Mop) Cast Iron 2" throat, 2" no hub connect	4	$65
CDA 22 - ABS 2" throat, 2" standard connect	2	$50
CDP 22 - PVC 2" throat, 2" standard connect	2	$50

*See page 169 for more information on flow rates. • See page 115 for individual components. • See page 224 for shipping information.

T
TRADITIONAL WATERPROOFING

SITE SIZABLE®

LOW PROFILE

NEW S-LAG 65

Site Sizable® PVC Channel
2mm Wedge Wire Stainless Steel Grate

Specifications	
Grate Material:	316L Stainless Steel
Channel Material:	PVC
Overall Width:	2 15/16"
Minimum Height:	1 1/2"
Flow Rate:	9 GPM

CUT TO LENGTH, LOCATE OUTLET ANYWHERE ON CHANNEL

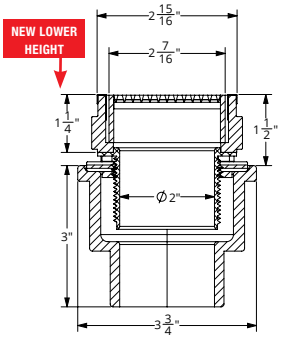

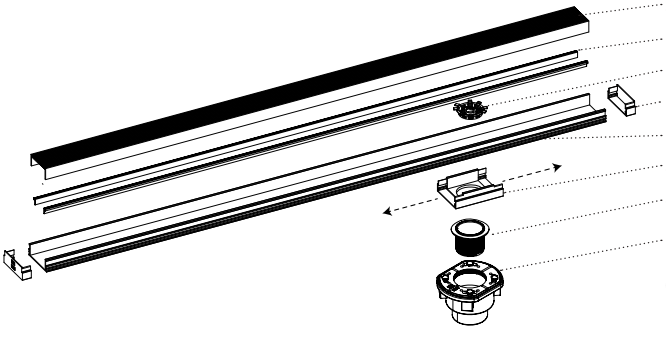

Description	Model	Finish	Lbs	List
36" Complete Kit Includes: (36 1/8" L x 2 15/16" W x 1" H) 1 - SA 6536 Grate 1 - GL 6536 PVC Channel 2 - EL 65 PVC Stop End 1 - SL 65 PVC Outlet Section 1 - CS 6536 Channel Spacer 1 - S 50 PVC Threaded Outlet 2 - CT 36 Channel Trim 1 - HS 2 Hair Strainer 1 - AKEY Lift Out Key	**S-LAG 6536 SS** **S-LAG 6536 PS** **S-LAG 6536 ORB** **S-LAG 6536 SB** **S-LAG 6536 BK**	Satin Stainless Polished Stainless Oil Rubbed Bronze Satin Bronze Matte Black	7	$855 $1020 $1020 $1020 $1020
48" Complete Kit Includes: (48 1/8" L x 2 15/16" W x 1" H) 1 - SA 6548 Grate 1 - GL 6548 PVC Channel 2 - EL 65 PVC Stop End 1 - SL 65 PVC Outlet Section 1 - CS 6548 Channel Spacer 1 - S 50 PVC Threaded Outlet 2 - CT 48 Channel Trim 1 - HS 2 Hair Strainer 1 - AKEY Lift Out Key	**S-LAG 6548 SS** **S-LAG 6548 PS** **S-LAG 6548 ORB** **S-LAG 6548 SB** **S-LAG 6548 BK**	Satin Stainless Polished Stainless Oil Rubbed Bronze Satin Bronze Matte Black	9	$910 $1075 $1075 $1075 $1075
60" Complete Kit Includes: (60 1/8" L x 2 15/16" W x 1" H) 1 - SA 6560 Grate 1 - GL 6560 PVC Channel 2 - EL 65 PVC Stop End 1 - SL 65 PVC Outlet Section 1 - CS 6560Channel Spacer 1 - S 50 PVC Threaded Outlet 2 - CT 60 Channel Trim 1 - HS 2 Hair Strainer 1 - AKEY Lift Out Key	**S-LAG 6560 SS** **S-LAG 6560 PS** **S-LAG 6560 ORB** **S-LAG 6560 SB** **S-LAG 6560 BK**	Satin Stainless Polished Stainless Oil Rubbed Bronze Satin Bronze Matte Black	11	$1075 $1185 $1185 $1185 $1185
72" Complete Kit Includes: (72 1/8" L x 2 15/16" W x 1" H) 1 - SA 6572 Grate 1 - GL 6572 PVC Channel 2 - EL 65 PVC Stop End 2 - SL 65 PVC Outlet Section 1 - CS 6572 Channel Spacer 2 - S 50 PVC Threaded Outlet 2 - CT 72 Channel Trim 2 - HS 2 Hair Strainer 1 - AKEY Lift Out Key	**S-LAG 6572 SS** **S-LAG 6572 PS** **S-LAG 6572 ORB** **S-LAG 6572 SB** **S-LAG 6572 BK** (Two outlets)	Satin Stainless Polished Stainless Oil Rubbed Bronze Satin Bronze Matte Black	18	$1450 $1585 $1585 $1585 $1585
96" Complete Kit Includes: (96 1/8" L x 2 15/16" W x 1" H) 2 - SA 6548 Grate 1 - GL 6596 PVC Channel 2 - EL 65 PVC Stop End 2 - SL 65 PVC Outlet Section 1 - CS 6596 Channel Spacer 2 - S 50 PVC Threaded Outlet 2 - CT 96 Channel Trim 2 - HS 2 Hair Strainer 1 - AKEY Lift Out Key	**S-LAG 6596 SS** **S-LAG 6596 PS** **S-LAG 6596 ORB** **S-LAG 6596 SB** **S-LAG 6596 BK** (Two outlets)	Satin Stainless Polished Stainless Oil Rubbed Bronze Satin Bronze Matte Black	22	$1820 $2140 $2140 $2140 $2140
CDIH 22 CDI/CDP/CDA 22	Drain Body **not** included in kit SKU If not provided, add...	**CDI 22** - Cast Iron 2" throat, 2" no hub connect **CDIH 22** - (For Hot Mop) Cast Iron 2" throat, 2" no hub connect **CDA 22** - ABS 2" throat, 2" standard connect **CDP 22** - PVC 2" throat, 2" standard connect	4 4 2 2	$65 $65 $50 $50

*See page 169 for more information on flow rates. • See page 116 for individual components. • See page 228 for shipping information.

S-DG 38

Site Sizable® PVC Channel
Circle Stainless Steel Grate

T
TRADITIONAL WATERPROOFING

SITE SIZABLE®

Specifications	
Grate Material:	304L Stainless Steel
Channel Material:	PVC
Overall Width:	1 7/8"
Minimum Height:	2 1/8"
Flow Rate:	9 GPM

CUT TO LENGTH, LOCATE OUTLET ANYWHERE ON CHANNEL

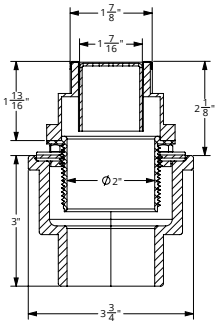

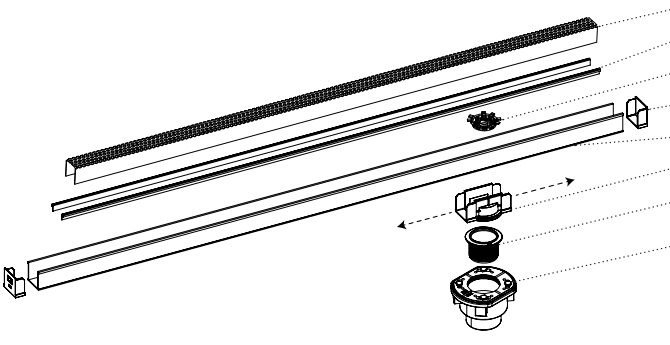

D 38 - Stainless Steel Grate
CT - Channel Trim
HS 2 - Hair Strainer
E 38 - PVC Stop End
G 38 - PVC Channel (ships as one piece)
S 32 - PVC Outlet Section
S 50 - PVC Threaded Outlet
2 inch clamp down drain assembly
Not included in kit SKU.
(Material can be Cast Iron, ABS, or PVC)

New channel spacer/mud guard included

Description	Model	Finish	Lbs	List
48" Complete Kit Includes: (48 1/8" L x 1 7/8" W x 1 9/16" H) 1 - D 3848 Grate 1 - G 3848 PVC Channel 2 - E 38 PVC Stop End 1 - S 32 PVC Outlet Section 1 - CS 3848 Channel Spacer 1 - S 50 PVC Threaded Outlet 2 - CT 48 Channel Trim 1 - HS 2 Hair Strainer 1 - AKEY Lift Out Key	**S-DG 3848 SS** **S-DG 3848 PS** **S-DG 3848 ORB** **S-DG 3848 SB** **S-DG 3848 BK**	Satin Stainless Polished Stainless Lifetime Oil Rubbed Bronze Satin Bronze Matte Black	9	$370 $535 $535 $535 $535
60" Complete Kit Includes: (60 1/8" L x 1 7/8" W x 1 9/16" H) 1 - D 3860 Grate 1 - G 3860 PVC Channel 2 - E 38 PVC Stop End 1 - S 32 PVC Outlet Section 1 - CS 3860 Channel Spacer 1 - S 50 PVC Threaded Outlet 2 - CT 60 Channel Trim 1 - HS 2 Hair Strainer 1 - AKEY Lift Out Key	**S-DG 3860 SS** **S-DG 3860 PS** **S-DG 3860 ORB** **S-DG 3860 SB** **S-DG 3860 BK**	Satin Stainless Polished Stainless Lifetime Oil Rubbed Bronze Satin Bronze Matte Black	11	$495 $650 $650 $650 $650
96" Complete Kit Includes: (96 1/8" L x 1 7/8" W x 1 9/16" H) 1 - D 3896 Grate 1 - G 3896 PVC Channel 2 - E 38 PVC Stop End 2 - S 32 PVC Outlet Section 1 - CS 3896 Channel Spacer 2 - S 50 PVC Threaded Outlet 2 - CT 96 Channel Trim 2 - HS 2 Hair Strainer 1 - AKEY Lift Out Key	**S-DG 3896 SS** **S-DG 3896 PS** **S-DG 3896 ORB** **S-DG 3896 SB** **S-DG 3896 BK** (Two outlets)	Satin Stainless Polished Stainless Lifetime Oil Rubbed Bronze Satin Bronze Matte Black	22	$695 $995 $995 $995 $995

CDIH 22

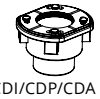
CDI/CDP/CDA 22

Drain Body **not** included in kit SKU. If not provided, add...

CDI 22 - Cast Iron 2" throat, 2" no hub connect	4	$65
CDIH 22 - (For Hot Mop) Cast Iron 2" throat, 2" no hub connect	4	$65
CDA 22 - ABS 2" throat, 2" standard connect	2	$50
CDP 22 - PVC 2" throat, 2" standard connect	2	$50

*See page 169 for more information on flow rates. • See page 113 for individual components. • See page 225-226 for shipping information.

T
TRADITIONAL WATERPROOFING

SITE SIZABLE®

LOW PROFILE

NEW **S-LT 38**

Site Sizable® PVC Channel Offset Slotted Stainless Steel Grate

Specifications	
Grate Material:	304L Stainless Steel
Channel Material:	PVC
Overall Width:	1 15/16"
Minimum Height:	1 1/2"
Flow Rate:	9 GPM

CUT TO LENGTH, LOCATE OUTLET ANYWHERE ON CHANNEL

NEW LOWER HEIGHT

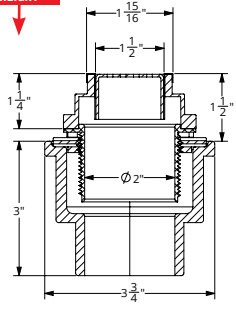

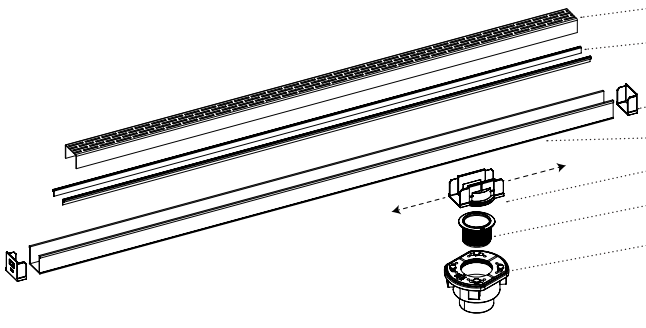

KA 38 - Stainless Steel Grate
CT - Channel Trim
EL 38 - PVC Stop End
GL 38 - PVC Channel (ships as one piece)
SL 32 - PVC Outlet Section
S 50 - PVC Threaded Outlet
2 inch clamp down drain assembly
Not included in kit SKU.
(Material can be Cast Iron, ABS, or PVC)

New channel spacer/mud guard included

Description	Model	Finish	Lbs	List
36" Complete Kit Includes: (36 1/8" L x 1 15/16" W x 1" H) 1 - KA 3836 Grate 1 - GL 3836 PVC Channel 2 - EL 38 PVC Stop End 1 - SL 32 PVC Outlet Section 1 - CS 3836 Channel Spacer 1 - S 50 PVC Threaded Outlet 2 - CT 36 Channel Trim 1 - AKEY Lift Out Key	**S-LT 3836 SS**	Satin Stainless	7	$280
	S-LT 3836 PS	Polished Stainless		$405
	S-LT 3836 ORB	Oil Rubbed Bronze		$405
	S-LT 3836 SB	Satin Bronze		$405
	S-LT 3836 BK	Matte Black		$405
48" Complete Kit Includes: (48 1/8" L x 1 15/16" W x 1" H) 1 - KA 3848 Grate 1 - GL 3848 PVC Channel 2 - EL 38 PVC Stop End 1 - SL 32 PVC Outlet Section 1 - CS 3848 Channel Spacer 1 - S 50 PVC Threaded Outlet 2 - CT 48 Channel Trim 1 - AKEY Lift Out Key	**S-LT 3848 SS**	Satin Stainless	9	$370
	S-LT 3848 PS	Polished Stainless		$535
	S-LT 3848 ORB	Oil Rubbed Bronze		$535
	S-LT 3848 SB	Satin Bronze		$535
	S-LT 3848 BK	Matte Black		$535
60" Complete Kit Includes: (60 1/8" L x 1 15/16" W x 1" H) 1 - KA 3860 Grate 1 - GL 3860 PVC Channel 2 - EL 38 PVC Stop End 1 - SL 32 PVC Outlet Section 1 - CS 3860 Channel Spacer 1 - S 50 PVC Threaded Outlet 2 - CT 60 Channel Trim 1 - AKEY Lift Out Key	**S-LT 3860 SS**	Satin Stainless	11	$495
	S-LT 3860 PS	Polished Stainless		$650
	S-LT 3860 ORB	Oil Rubbed Bronze		$650
	S-LT 3860 SB	Satin Bronze		$650
	S-LT 3860 BK	Matte Black		$650
72" Complete Kit Includes: (72 1/8" L x 1 15/16" W x 1" H) 1 - KA 3872 Grate 1 - GL 3872 PVC Channel 2 - EL 38 PVC Stop End 2 - SL 32 PVC Outlet Section 1 - CS 3872 Channel Spacer 2 - S 50 PVC Threaded Outlet 2 - CT 72 Channel Trim 1 - AKEY Lift Out Key	**S-LT 3872 SS**	Satin Stainless	18	$555
	S-LT 3872 PS	Polished Stainless		$805
	S-LT 3872 ORB	Oil Rubbed Bronze		$805
	S-LT 3872 SB	Satin Bronze		$805
	S-LT 3872 BK	Matte Black		$805
	(Two outlets)			
96" Complete Kit Includes: (96 1/8" L x 1 15/16" W x 1" H) 1 - KA 3896 Grate 1 - GL 3896 PVC Channel 2 - EL 38 PVC Stop End 2 - SL 32 PVC Outlet Section 1 - CS 3896 Channel Spacer 2 - S 50 PVC Threaded Outlet 2 - CT 96 Channel Trim 1 - AKEY Lift Out Key	**S-LT 3896 SS**	Satin Stainless	22	$695
	S-LT 3896 PS	Polished Stainless		$995
	S-LT 3896 ORB	Oil Rubbed Bronze		$995
	S-LT 3896 SB	Satin Bronze		$995
	S-LT 3896 BK	Matte Black		$995
	(Two outlets)			

CDIH 22

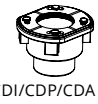
CDI/CDP/CDA 22

Drain Body **not** included in kit SKU If not provided, add...

CDI 22 - Cast Iron 2" throat, 2" no hub connect	4	$65
CDIH 22 - (For Hot Mop) Cast Iron 2" throat, 2" no hub connect	4	$65
CDA 22 - ABS 2" throat, 2" standard connect	2	$50
CDP 22 - PVC 2" throat, 2" standard connect	2	$50

*See page 169 for more information on flow rates. • See page 114 for individual components. • See page 228 for shipping information.

S-DG 65

Site Sizable® PVC Channel
Circle Stainless Steel Grate

T
TRADITIONAL WATERPROOFING

SITE SIZABLE®

Specifications	
Grate Material:	304L Stainless Steel
Channel Material:	PVC
Overall Width:	2 15/16"
Minimum Height:	2 1/8"
Flow Rate:	9 GPM

CUT TO LENGTH, LOCATE OUTLET ANYWHERE ON CHANNEL

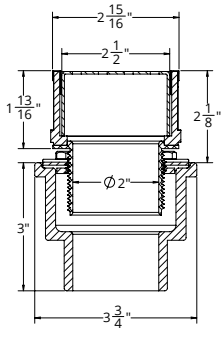

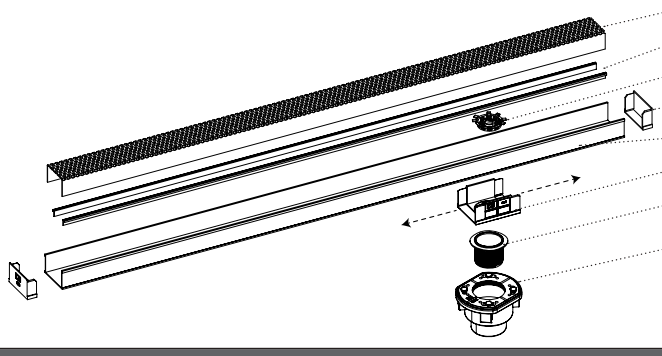

D 65 - Stainless Steel Grate
CT - Channel Trim
HS 2 - Hair Strainer
E 65 - PVC Stop End
G 65 - PVC Channel (ships as one piece)
S 65 - PVC Outlet Section
S 50 - PVC Threaded Outlet
2 inch clamp down drain assembly
Not included in kit SKU.
(Material can be Cast Iron, ABS, or PVC)

New channel spacer/mud guard included

Description	Model	Finish	Lbs	List
48" Complete Kit Includes: (48 1/8" L x 2 15/16" W x 1 11/16" H) 1 - D 6548 Grate 1 - G 6548 PVC Channel 2 - E 65 PVC Stop End 1 - S 65 PVC Outlet Section 1 - CS 6548 Channel Spacer 1 - S 50 PVC Threaded Outlet 2 - CT 48 Channel Trim 1 - HS 2 Hair Strainer 1 - DKEY Lift Out Key	**S-DG 6548 SS** **S-DG 6548 PS** **S-DG 6548 ORB** **S-DG 6548 SB** **S-DG 6548 BK**	Satin Stainless Polished Stainless Lifetime Oil Rubbed Bronze Satin Bronze Matte Black	9	$410 $550 $550 $550 $550
60" Complete Kit Includes: (60 1/8" L x 2 15/16" W x 1 11/16" H) 1 - D 6560 Grate 1 - G 6560 PVC Channel 2 - E 65 PVC Stop End 1 - S 65 PVC Outlet Section 1 - CS 6560 Channel Spacer 1 - S 50 PVC Threaded Outlet 2 - CT 60 Channel Trim 1 - HS 2 Hair Strainer 1 - DKEY Lift Out Key	**S-DG 6560 SS** **S-DG 6560 PS** **S-DG 6560 ORB** **S-DG 6560 SB** **S-DG 6560 BK**	Satin Stainless Polished Stainless Lifetime Oil Rubbed Bronze Satin Bronze Matte Black	11	$550 $735 $735 $735 $735
96" Complete Kit Includes: (96 1/8" L x 2 15/16" W x 1 11/16" H) 1 - D 6596 Grate 1 - G 6596 PVC Channel 2 - E 65 PVC Stop End 2 - S 65 PVC Outlet Section 1 - CS 6596 Channel Spacer 2 - S 50 PVC Threaded Outlet 2 - CT 96 Channel Trim 2 - HS 2 Hair Strainer 1 - DKEY Lift Out Key	**S-DG 6596 SS** **S-DG 6596 PS** **S-DG 6596 ORB** **S-DG 6596 SB** **S-DG 6596 BK** (Two outlets)	Satin Stainless Polished Stainless Lifetime Oil Rubbed Bronze Satin Bronze Matte Black	22	$775 $1010 $1010 $1010 $1010

CDIH 22

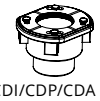
CDI/CDP/CDA 22

Drain Body **not** included in kit SKU. If not provided, add...

CDI 22 - Cast Iron 2" throat, 2" no hub connect	4	$65
CDIH 22 - (For Hot Mop) Cast Iron 2" throat, 2" no hub connect	4	$65
CDA 22 - ABS 2" throat, 2" standard connect	2	$50
CDP 22 - PVC 2" throat, 2" standard connect	2	$50

*See page 169 for more information on flow rates. • See page 115 for individual components. • See page 226 for shipping information.

T
TRADITIONAL WATERPROOFING

SITE SIZABLE®

LOW PROFILE

NEW **S-LT 65**

Site Sizable® PVC Channel Offset Slotted Stainless Steel Grate

Specifications	
Grate Material:	304L Stainless Steel
Channel Material:	PVC
Overall Width:	2 15/16"
Minimum Height:	1 1/2"
Flow Rate:	9 GPM

CUT TO LENGTH, LOCATE OUTLET ANYWHERE ON CHANNEL

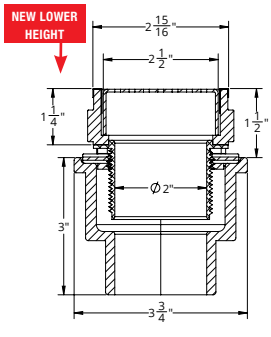

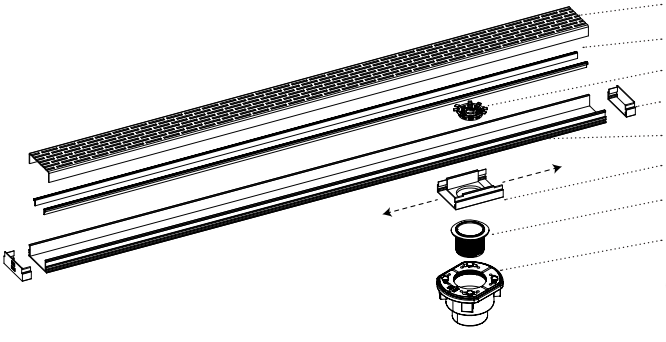

KA 65 - Stainless Steel Grate
CT - Channel Trim
HS 2 - Hair Strainer
EL 65 - PVC Stop End
GL 65 - PVC Channel (ships as one piece)
SL 65 - PVC Outlet Section
S 50 - PVC Threaded Outlet
2 inch clamp down drain assembly
Not included in kit SKU.
(Material can be Cast Iron, ABS, or PVC)

New channel spacer/mud guard included

Description	Model	Finish	Lbs	List
36" Complete Kit Includes: (36 1/8" L x 1 15/16" W x 1" H) 1 - KA 6536 Grate; 1 - GL 6536 PVC Channel; 2 - EL 65 PVC Stop End; 1 - SL 65 PVC Outlet Section; 1 - CS 6536 Channel Spacer; 1 - S 50 PVC Threaded Outlet; 2 - CT 36 Channel Trim; 1 - HS 2 Hair Strainer; 1 - AKEY Lift Out Key	**S-LT 6536 SS**	Satin Stainless	7	$310
	S-LT 6536 PS	Polished Stainless		$415
	S-LT 6536 ORB	Oil Rubbed Bronze		$415
	S-LT 6536 SB	Satin Bronze		$415
	S-LT 6536 BK	Matte Black		$415
48" Complete Kit Includes: (48 1/8" L x 1 15/16" W x 1" H) 1 - KA 6548 Grate; 1 - GL 6548 PVC Channel; 2 - EL 65 PVC Stop End; 1 - SL 65 PVC Outlet Section; 1 - CS 6548 Channel Spacer; 1 - S 50 PVC Threaded Outlet; 2 - CT 48 Channel Trim; 1 - HS 2 Hair Strainer; 1 - AKEY Lift Out Key	**S-LT 6548 SS**	Satin Stainless	9	$410
	S-LT 6548 PS	Polished Stainless		$550
	S-LT 6548 ORB	Oil Rubbed Bronze		$550
	S-LT 6548 SB	Satin Bronze		$550
	S-LT 6548 BK	Matte Black		$550
60" Complete Kit Includes: (60 1/8" L x 1 15/16" W x 1" H) 1 - KA 6560 Grate; 1 - GL 6560 PVC Channel; 2 - EL 65 PVC Stop End; 1 - SL 65 PVC Outlet Section; 1 - CS 6560 Channel Spacer; 1 - S 50 PVC Threaded Outlet; 2 - CT 60 Channel Trim; 1 - HS 2 Hair Strainer; 1 - AKEY Lift Out Key	**S-LT 6560 SS**	Satin Stainless	11	$550
	S-LT 6560 PS	Polished Stainless		$735
	S-LT 6560 ORB	Oil Rubbed Bronze		$735
	S-LT 6560 SB	Satin Bronze		$735
	S-LT 6560 BK	Matte Black		$735
72" Complete Kit Includes: (72 1/8" L x 1 15/16" W x 1" H) 1 - KA 6572 Grate; 1 - GL 6572 PVC Channel; 2 - EL 65 PVC Stop End; 2 - SL 65 PVC Outlet Section; 1 - CS 6572 Channel Spacer; 2 - S 50 PVC Threaded Outlet; 2 - CT 72 Channel Trim; 2 - HS 2 Hair Strainer; 1 - AKEY Lift Out Key	**S-LT 6572 SS**	Satin Stainless	18	$615
	S-LT 6572 PS	Polished Stainless		$825
	S-LT 6572 ORB	Oil Rubbed Bronze		$825
	S-LT 6572 SB	Satin Bronze		$825
	S-LT 6572 BK (Two outlets)	Matte Black		$825
96" Complete Kit Includes: (96 1/8" L x 1 15/16" W x 1" H) 1 - KA 6596 Grate; 1 - GL 6596 PVC Channel; 2 - EL 65 PVC Stop End; 2 - SL 65 PVC Outlet Section; 1 - CS 6596 Channel Spacer; 2 - S 50 PVC Threaded Outlet; 2 - CT 96 Channel Trim; 2 - HS 2 Hair Strainer; 1 - AKEY Lift Out Key	**S-LT 6596 SS**	Satin Stainless	22	$775
	S-LT 6596 PS	Polished Stainless		$1010
	S-LT 6596 ORB	Oil Rubbed Bronze		$1010
	S-LT 6596 SB	Satin Bronze		$1010
	S-LT 6596 BK (Two outlets)	Matte Black		$1010
CDIH 22 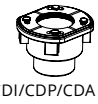 CDI/CDP/CDA 22	Drain Body **not** included in kit SKU If not provided, add...	**CDI 22** - Cast Iron 2" throat, 2" no hub connect	4	$65
		CDIH 22 - (For Hot Mop) Cast Iron 2" throat, 2" no hub connect	4	$65
		CDA 22 - ABS 2" throat, 2" standard connect	2	$50
		CDP 22 - PVC 2" throat, 2" standard connect	2	$50

*See page 169 for more information on flow rates. • See page 116 for individual components. • See page 228-229 for shipping information.

S-TIF 65

Site Sizable® PVC Channel
Tile Insert Frame Stainless Steel

T
TRADITIONAL WATERPROOFING

SITE SIZABLE®

Specifications	
Grate Material:	304L Stainless Steel
Channel Material:	PVC
Overall Width:	2 15/16"
Minimum Height:	2 1/16"
Flow Rate:	9 GPM

Tile not included
Open area for material (Depth 3/4")

CUT TO LENGTH, LOCATE OUTLET ANYWHERE ON CHANNEL

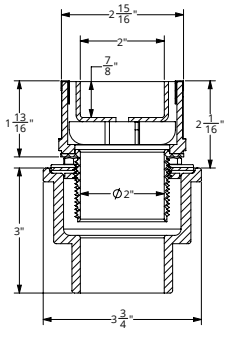

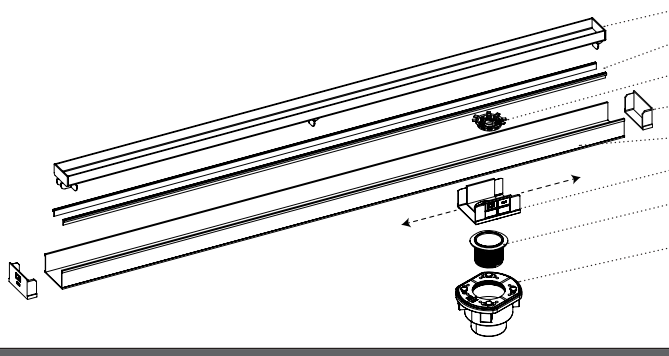

TA 65 - Tile Insert Frame
CT - Channel Trim
HS 2 - Hair Strainer
E 65 - PVC Stop End
G 65 - PVC Channel (ships as one piece)
S 65 - PVC Outlet Section
S 50 - PVC Threaded Outlet
2 inch clamp down drain assembly
Not included in kit SKU.
(Material can be Cast Iron, ABS, or PVC)

New channel spacer/mud guard included

Description	Model	Finish	Lbs	List
40" Complete Kit Includes: (40 1/8" L x 2 15/16" W x 1 11/16" H) 1 - TA 6540 Tile Insert Frame 1 - G 6540 PVC Channel 2 - E 65 PVC Stop End 1 - S 65 PVC Outlet Section 1 - CS 6540 Channel Spacer 1 - S 50 PVC Threaded Outlet 2 - CT 40 Channel Trim 1 - HS 2 Hair Strainer 1 - AKEY Lift Out Key 1 - TIF PL-Plates (to modify TA)	**S-TIF 6540 SS** **S-TIF 6540 PS** **S-TIF 6540 ORB** **S-TIF 6540 SB** **S-TIF 6540 BK**	Satin Stainless Polished Stainless Oil Rubbed Bronze Satin Bronze Matte Black	7	$695 $780 $780 $780 $780
48" Complete Kit Includes: (48 1/8" L x 2 15/16" W x 1 11/16" H) 1 - TA 6548 Tile Insert Frame 1 - G 6548 PVC Channel 2 - E 65 PVC Stop End 1 - S 65 PVC Outlet Section 1 - CS 6548 Channel Spacer 1 - S 50 PVC Threaded Outlet 2 - CT 48 Channel Trim 1 - HS 2 Hair Strainer 1 - AKEY Lift Out Key 1 - TIF PL-Plates (to modify TA)	**S-TIF 6548 SS** **S-TIF 6548 PS** **S-TIF 6548 ORB** **S-TIF 6548 SB** **S-TIF 6548 BK**	Satin Stainless Polished Stainless Lifetime Oil Rubbed Bronze Satin Bronze Matte Black	9	$825 $910 $910 $910 $910
60" Complete Kit Includes: (60 1/8" L x 2 15/16" W x 1 11/16" H) 1 - TA 6560 Tile Insert Frame 1 - G 6560 PVC Channel 2 - E 65 PVC Stop End 1 - S 65 PVC Outlet Section 1 - CS 6560 Channel Spacer 1 - S 50 PVC Threaded Outlet 2 - CT 60 Channel Trim 1 - HS 2 Hair Strainer 1 - AKEY Lift Out Key 1 - TIF PL-Plates (to modify TA)	**S-TIF 6560 SS** **S-TIF 6560 PS** **S-TIF 6560 ORB** **S-TIF 6560 SB** **S-TIF 6560 BK**	Satin Stainless Polished Stainless Lifetime Oil Rubbed Bronze Satin Bronze Matte Black	11	$1035 $1120 $1120 $1120 $1120
80" Complete Kit Includes: (80 1/8" L x 2 15/16" W x 1 11/16" H) 2 - TA 6540 Tile Insert Frame 1 - G 6580 PVC Channel 2 - E 65 PVC Stop End 2 - S 65 PVC Outlet Section 1 - CS 6580 Channel Spacer 2 - S 50 PVC Threaded Outlet 2 - CT 80 Channel Trim 2 - HS 2 Hair Strainer 1 - AKEY Lift Out Key 2 - TIF PL-Plates (to modify TA)	**S-TIF 6580 SS** **S-TIF 6580 PS** **S-TIF 6580 ORB** **S-TIF 6580 SB** **S-TIF 6580 BK** (Two outlets)	Satin Stainless Polished Stainless Lifetime Oil Rubbed Bronze Satin Bronze Matte Black	18	$1390 $1550 $1550 $1550 $1550
96" Complete Kit Includes: (96 1/8" L x 2 15/16" W x 1 11/16" H) 2 - TA 6548 Tile Insert Frame 1 - G 6596 PVC Channel 2 - E 65 PVC Stop End 2 - S 65 PVC Outlet Section 1 - CS 6596 Channel Spacer 2 - S 50 PVC Threaded Outlet 2 - CT 96 Channel Trim 2 - HS 2 Hair Strainer 1 - AKEY Lift Out Key 2 - TIF PL-Plates (to modify TA)	**S-TIF 6596 SS** **S-TIF 6596 PS** **S-TIF 6596 ORB** **S-TIF 6596 SB** **S-TIF 6596 BK** (Two outlets)	Satin Stainless Polished Stainless Lifetime Oil Rubbed Bronze Satin Bronze Matte Black	22	$1645 $1805 $1805 $1805 $1805
CDIH 22 CDI/CDP/CDA 22	Drain Body **not** included in kit SKU. If not provided, add...	**CDI 22** - Cast Iron 2" throat, 2" no hub connect **CDIH 22** - (For Hot Mop) Cast Iron 2" throat, 2" no hub connect **CDA 22** - ABS 2" throat, 2" standard connect **CDP 22** - PVC 2" throat, 2" standard connect	4 4 2 2	$65 $65 $50 $50

*See page 169 for more information on flow rates. • See page 115 for individual components. • See page 229 for shipping information.

T
TRADITIONAL WATERPROOFING

SITE SIZABLE®

LOW PROFILE

NEW **S-LTIF 65**

Site Sizable® PVC Channel Tile Insert Frame Stainless Steel

Specifications	
Grate Material:	304L Stainless Steel
Channel Material:	PVC
Overall Width:	2 15/16"
Minimum Height:	1 1/2"
Flow Rate:	9 GPM

Tile not included
Open area for material (Depth 3/8")

CUT TO LENGTH, LOCATE OUTLET ANYWHERE ON CHANNEL

NEW LOWER HEIGHT

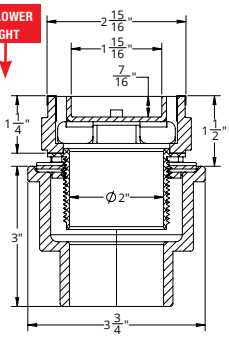

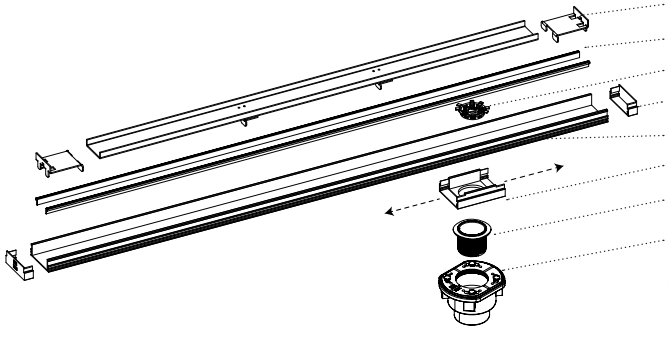

RA 65 - Tile Insert Frame Assembly
CT - Channel Trim
HS 2 - Hair Strainer
EL 65 - PVC Stop End
GL 65 - PVC Channel (ships as one piece)
SL 65 - PVC Outlet Section
S 50 - PVC Threaded Outlet
2 inch clamp down drain assembly
Not included in kit SKU.
(Material can be Cast Iron, ABS, or PVC)

New channel spacer/mud guard included

Description	Model	Finish	Lbs	List
36" Complete Kit Includes: (36 1/8" L x 2 15/16" W x 1" H) 1 - RA 6536 Tile Insert Frame; 1 - GL 6536 PVC Channel; 2 - EL 65 PVC Stop End; 1 - SL 65 PVC Outlet Section; 1 - CS 6536 Channel Spacer; 1 - S 50 PVC Threaded Outlet; 2 - CT 36 Channel Trim; 1 - HS 2 Hair Strainer; 1 - AKEY Lift Out Key; 1 - ZSIKA M1 Sealant	**S-LTIF 6536 SS** **S-LTIF 6536 PS** **S-LTIF 6536 ORB** **S-LTIF 6536 SB** **S-LTIF 6536 BK**	Satin Stainless Polished Stainless Oil Rubbed Bronze Satin Bronze Matte Black	7	$620 $685 $685 $685 $685
48" Complete Kit Includes: (48 1/8" L x 2 15/16" W x 1" H) 1 - RA 6548 Tile Insert Frame; 1 - GL 6548 PVC Channel; 2 - EL 65 PVC Stop End; 1 - SL 65 PVC Outlet Section; 1 - CS 6548 Channel Spacer; 1 - S 50 PVC Threaded Outlet; 2 - CT 48 Channel Trim; 1 - HS 2 Hair Strainer; 1 - AKEY Lift Out Key; 1 - ZSIKA M1 Sealant	**S-LTIF 6548 SS** **S-LTIF 6548 PS** **S-LTIF 6548 ORB** **S-LTIF 6548 SB** **S-LTIF 6548 BK**	Satin Stainless Polished Stainless Oil Rubbed Bronze Satin Bronze Matte Black	9	$825 $910 $910 $910 $910
60" Complete Kit Includes: (60 1/8" L x 2 15/16" W x 1" H) 1 - RA 6560 Tile Insert Frame; 1 - GL 6560 PVC Channel; 2 - EL 65 PVC Stop End; 1 - SL 65 PVC Outlet Section; 1 - CS 6560Channel Spacer; 1 - S 50 PVC Threaded Outlet; 2 - CT 60 Channel Trim; 1 - HS 2 Hair Strainer; 1 - AKEY Lift Out Key; 1 - ZSIKA M1 Sealant	**S-LTIF 6560 SS** **S-LTIF 6560 PS** **S-LTIF 6560 ORB** **S-LTIF 6560 SB** **S-LTIF 6560BK**	Satin Stainless Polished Stainless Oil Rubbed Bronze Satin Bronze Matte Black	11	$1035 $1120 $1120 $1120 $1120
72" Complete Kit Includes: (72 1/8" L x 2 15/16" W x 1" H) 2 - RA 6536 Tile Insert Frame; 1 - GL 6572 PVC Channel; 2 - EL 65 PVC Stop End; 2 - SL 65 PVC Outlet Section; 1 - CS 6572 Channel Spacer; 2 - S 50 PVC Threaded Outlet; 2 - CT 72 Channel Trim; 2 - HS 2 Hair Strainer; 1 - AKEY Lift Out Key; 1 - ZSIKA M1 Sealant	**S-LTIF 6572 SS** **S-LTIF 6572 PS** **S-LTIF 6572 ORB** **S-LTIF 6572 SB** **S-LTIF 6572 BK** (Two outlets)	Satin Stainless Polished Stainless Oil Rubbed Bronze Satin Bronze Matte Black	18	$1240 $1365 $1365 $1365 $1365
96" Complete Kit Includes: (96 1/8" L x 2 15/16" W x 1" H) 2 - RA 6548 Tile Insert Frame; 1 - GL 6596 PVC Channel; 2 - EL 65 PVC Stop End; 2 - SL 65 PVC Outlet Section; 1 - CS 6596 Channel Spacer; 2 - S 50 PVC Threaded Outlet; 2 - CT 96 Channel Trim; 2 - HS 2 Hair Strainer; 1 - AKEY Lift Out Key; 1 - ZSIKA M1 Sealant	**S-LTIF 6596 SS** **S-LTIF 6596 PS** **S-LTIF 6596 ORB** **S-LTIF 6596 SB** **S-LTIF 6596 BK** (Two outlets)	Satin Stainless Polished Stainless Oil Rubbed Bronze Satin Bronze Matte Black	22	$1645 $1805 $1805 $1805 $1805
CDIH 22 CDI/CDP/CDA 22	Drain Body **not** included in kit SKU If not provided, add...	**CDI 22** - Cast Iron 2" throat, 2" no hub connect **CDIH 22** - (For Hot Mop) Cast Iron 2" throat, 2" no hub connect **CDA 22** - ABS 2" throat, 2" standard connect **CDP 22** - PVC 2" throat, 2" standard connect	4 4 2 2	$65 $65 $50 $50

*See page 169 for more information on flow rates. • See page 116 for individual components. • See page 229 for shipping information.

S-AG 100

Site Sizable® PVC Channel
2mm Wedge Wire Stainless Steel Grate

LOW PROFILE

TRADITIONAL WATERPROOFING

SITE SIZABLE®

Specifications	
Grate Material:	316L Stainless Steel
Channel Material:	PVC
Overall Width:	4 1/4"
Minimum Height:	1 1/4"
Flow Rate:	9 GPM

CUT TO LENGTH, LOCATE OUTLET ANYWHERE ON CHANNEL

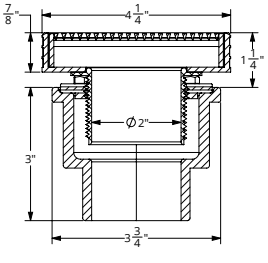

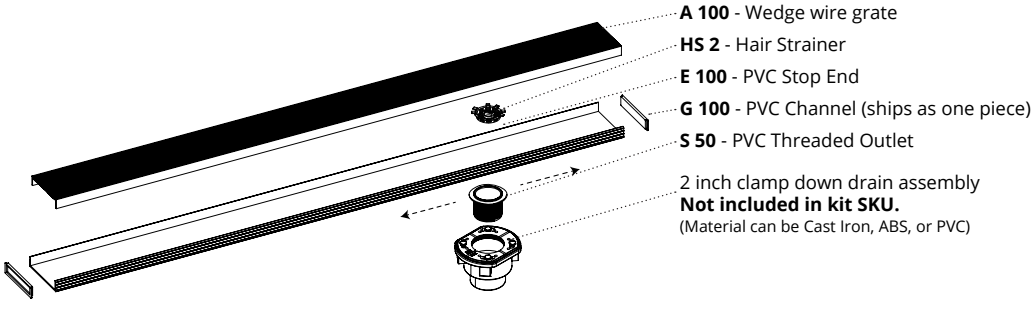

Description	Model	Finish	Lbs	List
48" Complete Kit Includes: (48 1/8" L x 4 3/16" W x 1 5/8" H) 1 - A 10048 Grate 1 - G 10048 PVC Channel 2 - E 100 PVC Stop End 1 - S 50 PVC Threaded Outlet 1 - HS 2 Hair Strainer 1 - AKEY Lift Out Key	**S-AG 10048 SS**	Satin Stainless	9	$965
	S-AG 10048 PS	Polished Stainless		$1260
	S-AG 10048 ORB	Lifetime Oil Rubbed Bronze		$1260
	S-AG 10048 SB	Satin Bronze		$1260
	S-AG 10048 BK	Matte Black		$1260
96" Complete Kit Includes: (96 1/8" L x 4 3/16" W x 1 5/8" H) 2 - A 10048 Grate 1 - G 10096 PVC Channel 2 - E 100 PVC Stop End 2 - S 50 PVC Threaded Outlet 2 - HS 2 Hair Strainer 1 - AKEY Lift Out Key	**S-AG 10096 SS**	Satin Stainless	22	$1930
	S-AG 10096 PS	Polished Stainless		$2515
	S-AG 10096 ORB	Lifetime Oil Rubbed Bronze		$2515
	S-AG 10096 SB	Satin Bronze		$2515
	S-AG 10096 BK (Two outlets)	Matte Black		$2515
CDIH 22 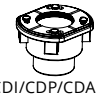 CDI/CDP/CDA 22	Drain Body **not** included in kit SKU. If not provided, add...	**CDI 22** - Cast Iron 2" throat, 2" no hub connect	4	$65
		CDIH 22 - (For Hot Mop) Cast Iron 2" throat, 2" no hub connect	4	$65
		CDA 22 - ABS 2" throat, 2" standard connect	2	$50
		CDP 22 - PVC 2" throat, 2" standard connect	2	$50

*See page 169 for more information on flow rates. • See page 117 for individual components. • See page 223-224 for shipping information.

Site Sizable®
Stainless Steel
Linear Drains

S-DGAS 65

Site Sizable® Stainless Steel Channel
Circle Stainless Steel Grate

T
TRADITIONAL WATERPROOFING

SITE SIZABLE®

Specifications	
Grate Material:	304L Stainless Steel
Channel Material:	Stainless Steel
Overall Width:	2 15/16"
Minimum Height:	1 5/16"
Flow Rate:	9 GPM

CUT TO LENGTH, LOCATE OUTLET ANYWHERE ON CHANNEL

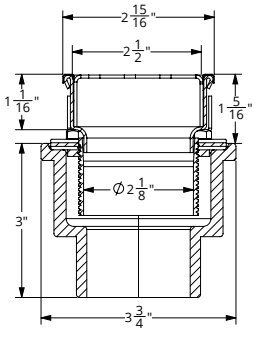

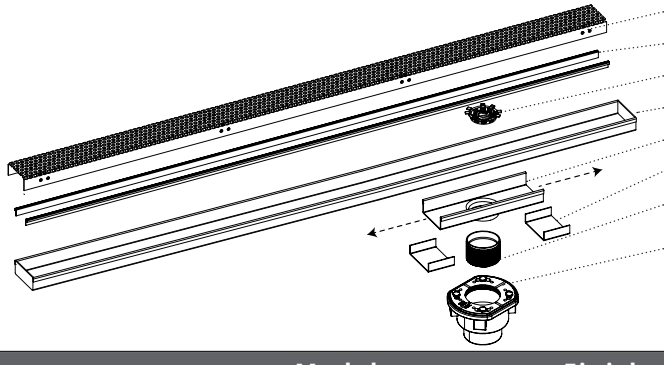

DA 65 - Stainless Steel Grate
CT - Channel Trim
HS 2 - Hair Strainer
LC 65 - Stainless Steel Channel
LF 65 - Stainless Steel Outlet Section
GJS 65 - Stainless Steel Joiner Strip
TNAS - Threaded Nipple
2 inch clamp down drain assembly
Not included in kit SKU.
(Material can be Cast Iron, ABS, or PVC)

Description	Model	Finish	Lbs	List
36" Complete Kit Includes: (36 1/8" L x 2 15/16" W x 1" H) 1 - DA 6536 Grate; 1 - LC 6528 Channel; 1 - LF 65 8" Outlet Section; 2 - GJS 65 Joiner Strip; 1 - TNAS Threaded Nipple; 1 - ZSIKA M1 Sealant; 2 - CT 36 Channel Trim; 1 - HS 2 Hair Strainer; 1 - DKEY Lift Out Key	**S-DGAS 6536 SS**	Satin Stainless	7	$630
	S-DGAS 6536 PS	Polished Stainless		$750
	S-DGAS 6536 ORB	Oil Rubbed Bronze		$750
	S-DGAS 6536 SB	Satin Bronze		$750
	S-DGAS 6536 BK	Matte Black		$750
48" Complete Kit Includes: (48 1/8" L x 2 15/16" W x 1" H) 1 - DA 6548 Grate; 1 - LC 6540 Channel; 1 - LF 65 8" Outlet Section; 2 - GJS 65 Joiner Strip; 1 - TNAS Threaded Nipple; 1 - ZSIKA M1 Sealant; 2 - CT 48 Channel Trim; 1 - HS 2 Hair Strainer; 1 - DKEY Lift Out Key	**S-DGAS 6548 SS**	Satin Stainless	9	$750
	S-DGAS 6548 PS	Polished Stainless		$870
	S-DGAS 6548 ORB	Lifetime Oil Rubbed Bronze		$870
	S-DGAS 6548 SB	Satin Bronze		$870
	S-DGAS 6548 BK	Matte Black		$870
60" Complete Kit Includes: (60 1/8" L x 2 15/16" W x 1" H) 1 - DA 6560 Grate; 1 - LC 6552 Channel; 1 - LF 65 8" Outlet Section; 2 - GJS 65 Joiner Strip; 1 - TNAS Threaded Nipple; 1 - ZSIKA M1 Sealant; 2 - CT 60 Channel Trim; 1 - HS 2 Hair Strainer; 1 - DKEY Lift Out Key	**S-DGAS 6560 SS**	Satin Stainless	11	$860
	S-DGAS 6560 PS	Polished Stainless		$920
	S-DGAS 6560 ORB	Lifetime Oil Rubbed Bronze		$920
	S-DGAS 6560 SB	Satin Bronze		$920
	S-DGAS 6560 BK	Matte Black		$920
72" Complete Kit Includes: (72 1/8" L x 2 15/16" W x 1" H) 1 - DA 6572 Grate; 1 - LC 6564 Channel; 2 - LF 65 8" Outlet Section; 4 - GJS 65 Joiner Strip; 2 - TNAS Threaded Nipple; 1 - ZSIKA M1 Sealant; 2 - CT 72 Channel Trim; 2 - HS 2 Hair Strainer; 1 - DKEY Lift Out Key	**S-DGAS 6572 SS**	Satin Stainless	18	$1035
	S-DGAS 6572 PS	Polished Stainless		$1245
	S-DGAS 6572 ORB	Lifetime Oil Rubbed Bronze		$1245
	S-DGAS 6572 SB	Satin Bronze		$1245
	S-DGAS 6572 BK (Two outlets)	Matte Black		$1245
96" Complete Kit Includes: (96 1/8" L x 2 15/16" W x 1" H) 1 - DA 6596 Grate; 1 - LC 6588 Channel; 2 - LF 65 8" Outlet Section; 4 - GJS 65 Joiner Strip; 2 - TNAS Threaded Nipple; 1 - ZSIKA M1 Sealant; 2 - CT 96 Channel Trim; 2 - HS 2 Hair Strainer; 1 - DKEY Lift Out Key	**S-DGAS 6596 SS**	Satin Stainless	22	$1440
	S-DGAS 6596 PS	Polished Stainless		$1695
	S-DGAS 6596 ORB	Lifetime Oil Rubbed Bronze		$1695
	S-DGAS 6596 SB	Satin Bronze		$1695
	S-DGAS 6596 BK (Two outlets)	Matte Black		$1695

CDIH 22

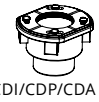
CDI/CDP/CDA 22

Drain Body **not** included in kit SKU. If not provided, add...

CDI 22 - Cast Iron 2" throat, 2" no hub connect	4	$65
CDIH 22 - (For Hot Mop) Cast Iron 2" throat, 2" no hub connect	4	$65
CDA 22 - ABS 2" throat, 2" standard connect	2	$50
CDP 22 - PVC 2" throat, 2" standard connect	2	$50

*See page 169 for more information on flow rates. • See page 119 for individual components. • See page 226 for shipping information.

T
TRADITIONAL WATERPROOFING

SITE SIZABLE®

HIGH FLOW

S-DGAS 99

Site Sizable® Stainless Steel Channel **Circle** Stainless Steel Grate

Specifications	
Grate Material:	304L Stainless Steel
Channel Material:	Stainless Steel
Overall Width:	2 15/16"
Minimum Height:	1 13/16"
Flow Rate:	21 GPM

CUT TO LENGTH, LOCATE OUTLET ANYWHERE ON CHANNEL

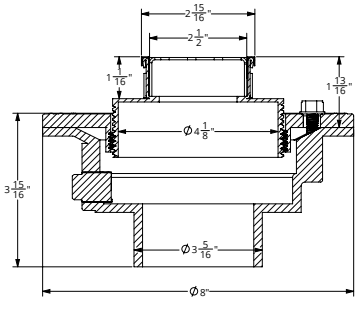

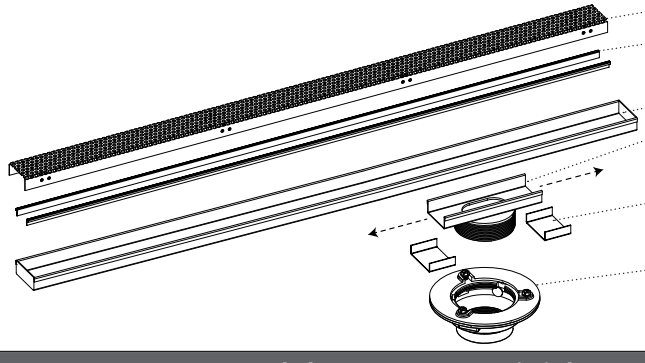

DA 65 - Stainless Steel Grate
CT - Channel Trim
LC 65 - Stainless Steel Channel
LF 99 - Stainless Steel Outlet Section (High Flow)
GJS 65 - Stainless Steel Joiner Strip
CDI 43W/ CDP 43W/ CDA 43W
3 inch clamp down drain assembly
INCLUDED IN KIT SKU
(Material can be Cast Iron, ABS, or PVC)*

Description	Model	Finish	Lbs	List
36" Complete Kit Includes: (36 1/8" L x 2 15/16" W x 1" H) 1 - DA 6536 Grate 1 - LC 6528 Channel 1 - LF 99 8" Outlet Section 2 - GJS 65 Joiner Strip 1 - ZSIKA M1 Sealant 2 - CT 36 Channel Trim 1 - DKEY Lift Out Key 1 - CDI 43W/CDP 43W/CDA 43W Drain Body*	**S-DGAS 9936-I SS** **S-DGAS 9936-I PS** **S-DGAS 9936-I ORB** **S-DGAS 9936-I SB** **S-DGAS 9936-I BK**	Satin Stainless Polished Stainless Oil Rubbed Bronze Satin Bronze Matte Black	7	$895 $1030 $1030 $1030 $1030
48" Complete Kit Includes: (48 1/8" L x 2 15/16" W x 1" H) 1 - DA 6548 Grate 1 - LC 6540 Channel 1 - LF 99 8" Outlet Section 2 - GJS 65 Joiner Strip 1 - ZSIKA M1 Sealant 2 - CT 48 Channel Trim 1 - DKEY Lift Out Key 1 - CDI 43W/CDP 43W/CDA 43W Drain Body*	**S-DGAS 9948-I SS** **S-DGAS 9948-I PS** **S-DGAS 9948-I ORB** **S-DGAS 9948-I SB** **S-DGAS 9948-I BK**	Satin Stainless Polished Stainless Lifetime Oil Rubbed Bronze Satin Bronze Matte Black	9	$1015 $1125 $1125 $1125 $1125
60" Complete Kit Includes: (60 1/8" L x 2 15/16" W x 1" H) 1 - DA 6560 Grate 1 - LC 6552 Channel 1 - LF 99 8" Outlet Section 2 - GJS 65 Joiner Strip 1 - ZSIKA M1 Sealant 2 - CT 60 Channel Trim 1 - DKEY Lift Out Key 1 - CDI 43W/CDP 43W/CDA 43W Drain Body*	**S-DGAS 9960-I SS** **S-DGAS 9960-I PS** **S-DGAS 9960-I ORB** **S-DGAS 9960-I SB** **S-DGAS 9960-I BK**	Satin Stainless Polished Stainless Lifetime Oil Rubbed Bronze Satin Bronze Matte Black	11	$1125 $1175 $1175 $1175 $1175
72" Complete Kit Includes: (72 1/8" L x 2 15/16" W x 1" H) 1 - DA 6572 Grate 1 - LC 6564 Channel 2 - LF 99 8" Outlet Section 4 - GJS 65 Joiner Strip 1 - ZSIKA M1 Sealant 2 - CT 72 Channel Trim 1 - DKEY Lift Out Key 2 - CDI 43W/CDP 43W/CDA 43W Drain Body*	**S-DGAS 9972-I SS** **S-DGAS 9972-I PS** **S-DGAS 9972-I ORB** **S-DGAS 9972-I SB** **S-DGAS 9972-I BK** (Two outlets)	Satin Stainless Polished Stainless Lifetime Oil Rubbed Bronze Satin Bronze Matte Black	18	$1680 $1890 $1890 $1890 $1890
96" Complete Kit Includes: (96 1/8" L x 2 15/16" W x 1" H) 1 - DA 6596 Grate 1 - LC 6588 Channel 2 - LF 99 8" Outlet Section 4 - GJS 65 Joiner Strip 1 - ZSIKA M1 Sealant 2 - CT 96 Channel Trim 1 - DKEY Lift Out Key 2 - CDI 43W/CDP 43W/CDA 43W Drain Body*	**S-DGAS 9996-I SS** **S-DGAS 9996-I PS** **S-DGAS 9996-I ORB** **S-DGAS 9996-I SB** **S-DGAS 9996-I BK** (Two outlets)	Satin Stainless Polished Stainless Lifetime Oil Rubbed Bronze Satin Bronze Matte Black	22	$1970 $2205 $2205 $2205 $2205

***S-DGAS 99 Complete Kits include a Cast Iron Drain Body. If ABS or PVC drain body is desired, replace I with A or P in model number.**
(Example: S-DGAS 9936-P SS)

*See page 169 for more information on flow rates. • See page 119 for individual components. • See page 226-227 for shipping information.

S-AS 65

Site Sizable® Stainless Steel Channel
2mm Wedge Wire Stainless Steel Grate

T
TRADITIONAL WATERPROOFING

SITE SIZABLE®

Specifications	
Grate Material:	316L Stainless Steel
Channel Material:	Stainless Steel
Overall Width:	2 15/16"
Minimum Height:	1 5/16"
Flow Rate:	9 GPM

CUT TO LENGTH, LOCATE OUTLET ANYWHERE ON CHANNEL

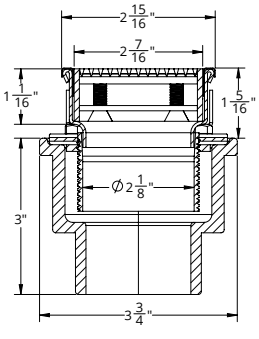

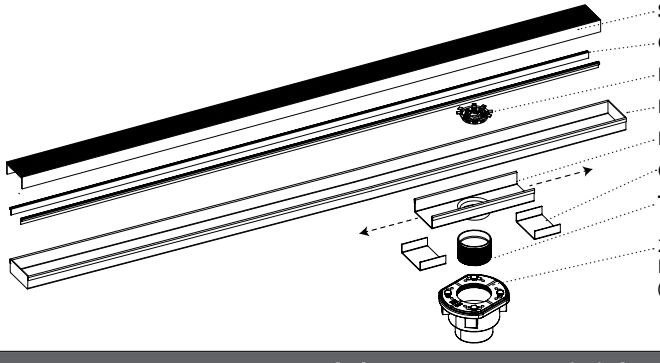

Description	Model	Finish	Lbs	List
36" Complete Kit Includes: (36 1/8" L x 2 15/16" W x 1" H) 1 - SA 6536 Grate 1 - LC 6528 Channel 1 - LF 65 8" Outlet Section 2 - GJS 65 Joiner Strip 1 - TNAS Threaded Nipple 1 - ZSIKA M1 Sealant 2 - CT 36 Channel Trim 1 - HS 2 Hair Strainer 1 - AKEY Lift Out Key	**S-AS 6536 SS** **S-AS 6536 PS** **S-AS 6536 ORB** **S-AS 6536 SB** **S-AS 6536 BK**	Satin Stainless Polished Stainless Oil Rubbed Bronze Satin Bronze Matte Black	7	$1065 $1275 $1275 $1275 $1275
48" Complete Kit Includes: (48 1/8" L x 2 15/16" W x 1" H) 1 - SA 6548 Grate 1 - LC 6540 Channel 1 - LF 65 8" Outlet Section 2 - GJS 65 Joiner Strip 1 - TNAS Threaded Nipple 1 - ZSIKA M1 Sealant 2 - CT 48 Channel Trim 1 - HS 2 Hair Strainer 1 - AKEY Lift Out Key	**S-AS 6548 SS** **S-AS 6548 PS** **S-AS 6548 ORB** **S-AS 6548 SB** **S-AS 6548 BK**	Satin Stainless Polished Stainless Lifetime Oil Rubbed Bronze Satin Bronze Matte Black	9	$1285 $1490 $1490 $1490 $1490
60" Complete Kit Includes: (60 1/8" L x 2 15/16" W x 1" H) 1 - SA 6560 Grate 1 - LC 6552 Channel 1 - LF 65 8" Outlet Section 2 - GJS 65 Joiner Strip 1 - TNAS Threaded Nipple 1 - ZSIKA M1 Sealant 2 - CT 60 Channel Trim 1 - HS 2 Hair Strainer 1 - AKEY Lift Out Key	**S-AS 6560 SS** **S-AS 6560 PS** **S-AS 6560 ORB** **S-AS 6560 SB** **S-AS 6560 BK**	Satin Stainless Polished Stainless Lifetime Oil Rubbed Bronze Satin Bronze Matte Black	11	$1505 $1710 $1710 $1710 $1710
72" Complete Kit Includes: (72 1/8" L x 2 15/16" W x 1" H) 1 - SA 6572 Grate 1 - LC 6564 Channel 2 - LF 65 8" Outlet Section 4 - GJS 65 Joiner Strip 2 - TNAS Threaded Nipple 1 - ZSIKA M1 Sealant 2 - CT 72 Channel Trim 2 - HS 2 Hair Strainer 1 - AKEY Lift Out Key	**S-AS 6572 SS** **S-AS 6572 PS** **S-AS 6572 ORB** **S-AS 6572 SB** **S-AS 6572 BK** (Two outlets)	Satin Stainless Polished Stainless Lifetime Oil Rubbed Bronze Satin Bronze Matte Black	18	$2020 $2410 $2410 $2410 $2410
96" Complete Kit Includes: (96 1/8" L x 2 15/16" W x 1" H) 1 - SA 6596 Grate 1 - LC 6588 Channel 2 - LF 65 8" Outlet Section 4 - GJS 65 Joiner Strip 2 - TNAS Threaded Nipple 1 - ZSIKA M1 Sealant 2 - CT 96 Channel Trim 2 - HS 2 Hair Strainer 1 - AKEY Lift Out Key	**S-AS 6596 SS** **S-AS 6596 PS** **S-AS 6596 ORB** **S-AS 6596 SB** **S-AS 6596 BK** (Two outlets)	Satin Stainless Polished Stainless Lifetime Oil Rubbed Bronze Satin Bronze Matte Black	22	$2585 $2985 $2985 $2985 $2985

CDIH 22

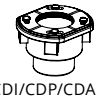
CDI/CDP/CDA 22

Drain Body **not** included in kit SKU. If not provided, add...

CDI 22 - Cast Iron 2" throat, 2" no hub connect	4	$65
CDIH 22 - (For Hot Mop) Cast Iron 2" throat, 2" no hub connect	4	$65
CDA 22 - ABS 2" throat, 2" standard connect	2	$50
CDP 22 - PVC 2" throat, 2" standard connect	2	$50

*See page 169 for more information on flow rates. • See page 119 for individual components. • See page 224 for shipping information.

T
TRADITIONAL WATERPROOFING

SITE SIZABLE®

HIGH FLOW

S-AS 99

Site Sizable® Stainless Steel Channel
2mm Wedge Wire Stainless Steel Grate

Specifications	
Grate Material:	316L Stainless Steel
Channel Material:	Stainless Steel
Overall Width:	2 15/16"
Minimum Height:	1 13/16"
Flow Rate:	21 GPM

CUT TO LENGTH, LOCATE OUTLET ANYWHERE ON CHANNEL

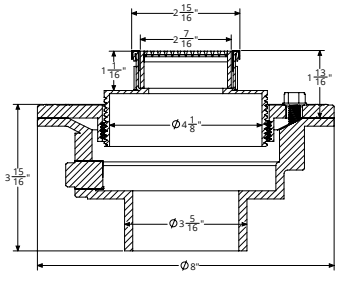

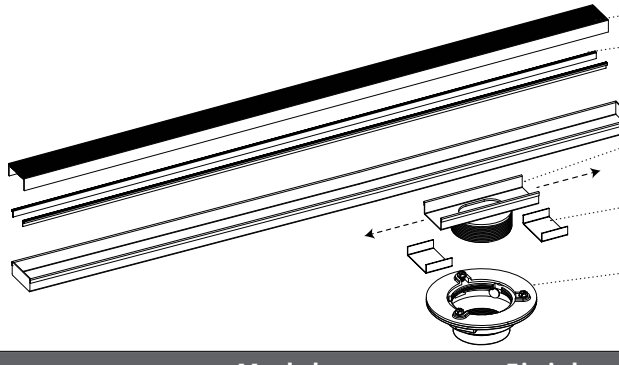

SA 65 - Stainless Steel Grate
CT - Channel Trim
LC 65 - Stainless Steel Channel
LF 99 - Stainless Steel Outlet Section (High Flow)
GJS 65 - Stainless Steel Joiner Strip
CDI 43W/ CDP 43W/ CDA 43W
3 inch clamp down drain assembly
INCLUDED IN KIT SKU
(Material can be Cast Iron, ABS, or PVC)*

Description	Model	Finish	Lbs	List
36" Complete Kit Includes: (36 1/8" L x 2 7/8" W x 1" H) 1 - SA 6536 Grate 1 - LC 6528 Channel 1 - LF 99 8" Outlet Section 2 - GJS 65 Joiner Strip 1 - ZSIKA M1 Sealant 2 - CT 36 Channel Trim 1 - AKEY Lift Out Key 1 - CDI 43W/CDP 43W/CDA 43W Drain Body*	**S-AS 9936-I SS** **S-AS 9936-I PS** **S-AS 9936-I ORB** **S-AS 9936-I SB** **S-AS 9936-I BK**	Satin Stainless Polished Stainless Oil Rubbed Bronze Satin Bronze Matte Black	7	$1330 $1530 $1530 $1530 $1530
48" Complete Kit Includes: (48 1/8" L x 2 7/8" W x 1" H) 1 - SA 6548 Grate 1 - LC 6540 Channel 1 - LF 99 8" Outlet Section 2 - GJS 65 Joiner Strip 1 - ZSIKA M1 Sealant 2 - CT 48 Channel Trim 1 - AKEY Lift Out Key 1 - CDI 43W/CDP 43W/CDA 43W Drain Body*	**S-AS 9948-I SS** **S-AS 9948-I PS** **S-AS 9948-I ORB** **S-AS 9948-I SB** **S-AS 9948-I BK**	Satin Stainless Polished Stainless Lifetime Oil Rubbed Bronze Satin Bronze Matte Black	9	$1550 $1745 $1745 $1745 $1745
60" Complete Kit Includes: (60 1/8" L x 2 7/8" W x 1" H) 1 - SA 6560 Grate 1 - LC 6552 Channel 1 - LF 99 8" Outlet Section 2 - GJS 65 Joiner Strip 1 - ZSIKA M1 Sealant 2 - CT 60 Channel Trim 1 - AKEY Lift Out Key 1 - CDI 43W/CDP 43W/CDA 43W Drain Body*	**S-AS 9960-I SS** **S-AS 9960-I PS** **S-AS 9960-I ORB** **S-AS 9960-I SB** **S-AS 9960-I BK**	Satin Stainless Polished Stainless Lifetime Oil Rubbed Bronze Satin Bronze Matte Black	11	$1770 $1965 $1965 $1965 $1965
72" Complete Kit Includes: (72 1/8" L x 2 7/8" W x 1" H) 1 - SA 6572 Grate 1 - LC 6564 Channel 2 - LF 99 8" Outlet Section 4 - GJS 65 Joiner Strip 1 - ZSIKA M1 Sealant 2 - CT 72 Channel Trim 1 - AKEY Lift Out Key 2 - CDI 43W/CDP 43W/CDA 43W Drain Body*	**S-AS 9972-I SS** **S-AS 9972-I PS** **S-AS 9972-I ORB** **S-AS 9972-I SB** **S-AS 9972-I BK** (Two outlets)	Satin Stainless Polished Stainless Lifetime Oil Rubbed Bronze Satin Bronze Matte Black	18	$2550 $2920 $2920 $2920 $2920
96" Complete Kit Includes: (96 1/8" L x 2 7/8" W x 1" H) 1 - SA 6596 Grate 1 - LC 6588 Channel 2 - LF 99 8" Outlet Section 4 - GJS 65 Joiner Strip 1 - ZSIKA M1 Sealant 2 - CT 96 Channel Trim 1 - AKEY Lift Out Key 2 - CDI 43W/CDP 43W/CDA 43W Drain Body*	**S-AS 9996-I SS** **S-AS 9996-I PS** **S-AS 9996-I ORB** **S-AS 9996-I SB** **S-AS 9996-I BK** (Two outlets)	Satin Stainless Polished Stainless Lifetime Oil Rubbed Bronze Satin Bronze Matte Black	22	$3115 $3495 $3495 $3495 $3495

***S-AS 99 Complete Kits include a Cast Iron Drain Body. If ABS or PVC drain body is desired, replace I with A or P in model number.**
(Example: S-AS 9936-P SS)

*See page 169 for more information on flow rates. • See page 119 for individual components. • See page 224-225 for shipping information.

S-TIFAS 65

Site Sizable® Stainless Steel Channel
Tile Insert Frame Stainless Steel

T
TRADITIONAL WATERPROOFING

SITE SIZABLE®

Specifications	
Grate Material:	304L Stainless Steel
Channel Material:	Stainess Steel
Overall Width:	2 7/8"
Minimum Height:	1 3/4"
Flow Rate:	9 GPM

Tile not included
Open area for material (Depth 3/4")

CUT TO LENGTH, LOCATE OUTLET ANYWHERE ON CHANNEL

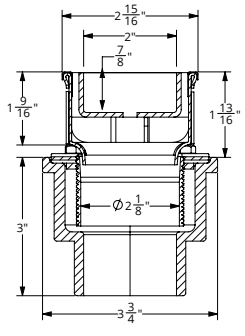

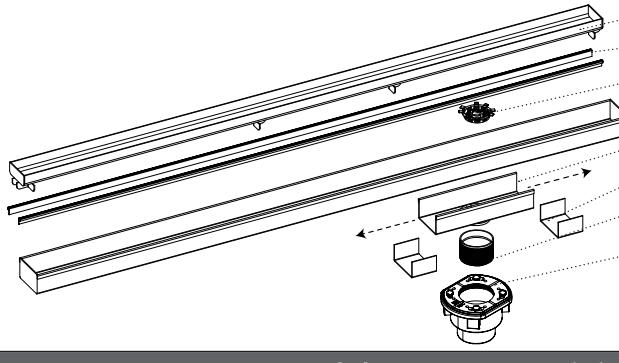

TA 65 - Stainless Steel Tile Insert
CT - Channel Trim
HS 2 - Hair Strainer
HC 65 - Stainless Steel Channel
HF 65 - Stainless Steel Outlet Section
TJS 65 - Stainless Steel Joiner Strip
TNAS - Threaded Nipple
2 inch clamp down drain assembly
Not included in kit SKU.
(Material can be Cast Iron, ABS, or PVC)

Description	Model	Finish	Lbs	List
40" Complete Kit Includes: (40 1/8" L x 2 15/16" W x 1 5/8" H) 1 - TA 6540 Grate 1 - HC 6532 Channel 1 - HF 65 8" Outlet Section 2 - TJS 65 Joiner Strip 1 - TNAS Threaded Nipple 1 - ZSIKA M1 Sealant 2 - CT 40 Channel Trim 1 - HS 2 Hair Strainer 1 - AKEY Lift Out Key	**S-TIFAS 6540 SS** **S-TIFAS 6540 PS** **S-TIFAS 6540 ORB** **S-TIFAS 6540 SB** **S-TIFAS 6540 BK**	Satin Stainless Polished Stainless Oil Rubbed Bronze Satin Bronze Matte Black	7	$995 $1110 $1110 $1110 $1110
48" Complete Kit Includes: (48 1/8" L x 2 15/16" W x 1 5/8" H) 1 - TA 6548 Grate 1 - HC 6540 Channel 1 - HF 65 8" Outlet Section 2 - TJS 65 Joiner Strip 1 - TNAS Threaded Nipple 1 - ZSIKA M1 Sealant 2 - CT 48 Channel Trim 1 - HS 2 Hair Strainer 1 - AKEY Lift Out Key	**S-TIFAS 6548 SS** **S-TIFAS 6548 PS** **S-TIFAS 6548 ORB** **S-TIFAS 6548 SB** **S-TIFAS 6548 BK**	Satin Stainless Polished Stainless Lifetime Oil Rubbed Bronze Satin Bronze Matte Black	9	$1140 $1275 $1275 $1275 $1275
60" Complete Kit Includes: (60 1/8" L x 2 15/16" W x 1 5/8" H) 1 - TA 6560 Grate 1 - HC 6552 Channel 1 - HF 65 8" Outlet Section 2 - TJS 65 Joiner Strip 1 - TNAS Threaded Nipple 1 - ZSIKA M1 Sealant 2 - CT 60 Channel Trim 1 - HS 2 Hair Strainer 1 - AKEY Lift Out Key	**S-TIFAS 6560 SS** **S-TIFAS 6560 PS** **S-TIFAS 6560 ORB** **S-TIFAS 6560 SB** **S-TIFAS 6560 BK**	Satin Stainless Polished Stainless Lifetime Oil Rubbed Bronze Satin Bronze Matte Black	11	$1350 $1495 $1495 $1495 $1495
80" Complete Kit Includes: (80 1/8" L x 2 15/16" W x 1 5/8" H) 1 - TA 6580 Grate 1 - HC 6572 Channel 2 - HF 65 8" Outlet Section 4 - TJS 65 Joiner Strip 2 - TNAS Threaded Nipple 1 - ZSIKA M1 Sealant 2 - CT 80 Channel Trim 2 - HS 2 Hair Strainer 1 - AKEY Lift Out Key	**S-TIFAS 6580 SS** **S-TIFAS 6580 PS** **S-TIFAS 6580 ORB** **S-TIFAS 6580 SB** **S-TIFAS 6580 BK** (Two outlets)	Satin Stainless Polished Stainless Lifetime Oil Rubbed Bronze Satin Bronze Matte Black	18	$1900 $2090 $2090 $2090 $2090
96" Complete Kit Includes: (96 1/8" L x 2 15/16" W x 1 5/8" H) 1 - TA 6596 Grate 1 - HC 6588 Channel 2 - HF 65 8" Outlet Section 4 - TJS 65 Joiner Strip 2 - TNAS Threaded Nipple 1 - ZSIKA M1 Sealant 2 - CT 96 Channel Trim 2 - HS 2 Hair Strainer 1 - AKEY Lift Out Key	**S-TIFAS 6596 SS** **S-TIFAS 6596 PS** **S-TIFAS 6596 ORB** **S-TIFAS 6596 SB** **S-TIFAS 6596 BK** (Two outlets)	Satin Stainless Polished Stainless Lifetime Oil Rubbed Bronze Satin Bronze Matte Black	22	$2270 $2470 $2470 $2470 $2470

CDIH 22

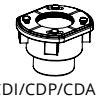
CDI/CDP/CDA 22

Drain Body **not** included in kit SKU. If not provided, add...

CDI 22 - Cast Iron 2" throat, 2" no hub connect	4	$65
CDIH 22 - (For Hot Mop) Cast Iron 2" throat, 2" no hub connect	4	$65
CDA 22 - ABS 2" throat, 2" standard connect	2	$50
CDP 22 - PVC 2" throat, 2" standard connect	2	$50

*See page 169 for more information on flow rates. • See page 120 for individual components. • See page 229 for shipping information.

S-TIFAS 99

Site Sizable® Stainless Steel Channel
Tile Insert Frame Stainless Steel

Specifications	
Grate Material:	304L Stainless Steel
Channel Material:	Stainless Steel
Overall Width:	2 7/8"
Minimum Height:	2"
Flow Rate:	21 GPM

Tile not included
Open area for material (Depth 3/4")

CUT TO LENGTH, LOCATE OUTLET ANYWHERE ON CHANNEL

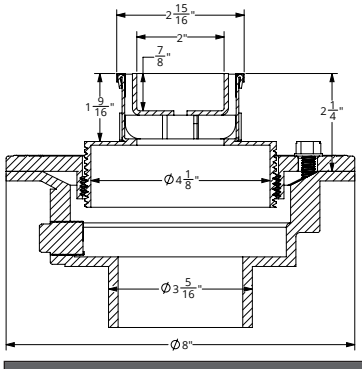

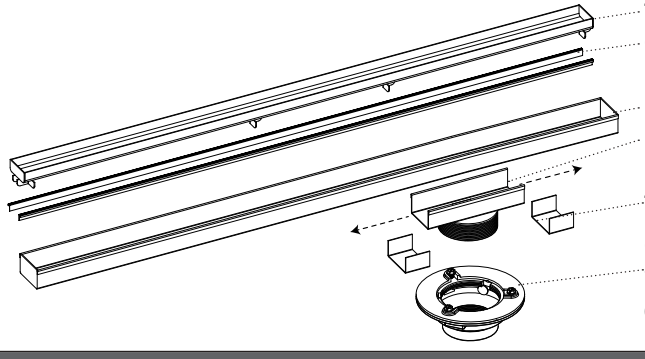

TA 65 - Stainless Steel Tile Insert
CT - Channel Trim
HC 65 - Stainless Steel Channel
HF 99 - Stainless Steel Outlet Section (High Flow)
TJS 65 - Stainless Steel Joiner Strip
CDI 43W/ CDP 43W/ CDA 43W
3 inch clamp down drain assembly
INCLUDED IN KIT SKU
(Material can be Cast Iron, ABS, or PVC)*

Description	Model	Finish	Lbs	List
40" Complete Kit Includes: (40 1/8" L x 2 15/16" W x 1 5/8" H) 1 - TA 6540 Grate 1 - HC 6532 Channel 1 - HF 99 8" Outlet Section 2 - TJS 65 Joiner Strip 1 - ZSIKA M1 Sealant 2 - CT 40 Channel Trim 1 - AKEY Lift Out Key 1 - CDI 43W/CDP 43W/CDA 43W Drain Body*	**S-TIFAS 9940-I SS** **S-TIFAS 9940-I PS** **S-TIFAS 9940-I ORB** **S-TIFAS 9940-I SB** **S-TIFAS 9940-I BK**	Satin Stainless Polished Stainless Oil Rubbed Bronze Satin Bronze Matte Black	7	$1520 $1680 $1680 $1680 $1680
48" Complete Kit Includes: (48 1/8" L x 2 15/16" W x 1 5/8" H) 1 - TA 6548 Grate 1 - HC 6540 Channel 1 - HF 99 8" Outlet Section 2 - TJS 65 Joiner Strip 1 - ZSIKA M1 Sealant 2 - CT 48 Channel Trim 1 - AKEY Lift Out Key 1 - CDI 43W/CDP 43W/CDA 43W Drain Body*	**S-TIFAS 9948-I SS** **S-TIFAS 9948-I PS** **S-TIFAS 9948-I ORB** **S-TIFAS 9948-I SB** **S-TIFAS 9948-I BK**	Satin Stainless Polished Stainless Lifetime Oil Rubbed Bronze Satin Bronze Matte Black	9	$1745 $1845 $1845 $1845 $1845
60" Complete Kit Includes: (60 1/8" L x 2 15/16" W x 1 5/8" H) 1 - TA 6560 Grate 1 - HC 6552 Channel 1 - HF 99 8" Outlet Section 2 - TJS 65 Joiner Strip 1 - ZSIKA M1 Sealant 2 - CT 60 Channel Trim 1 - AKEY Lift Out Key 1 - CDI 43W/CDP 43W/CDA 43W Drain Body*	**S-TIFAS 9960-I SS** **S-TIFAS 9960-I PS** **S-TIFAS 9960-I ORB** **S-TIFAS 9960-I SB** **S-TIFAS 9960-I BK**	Satin Stainless Polished Stainless Lifetime Oil Rubbed Bronze Satin Bronze Matte Black	11	$1875 $2065 $2065 $2065 $2065
80" Complete Kit Includes: (80 1/8" L x 2 15/16" W x 1 5/8" H) 2 - TA 6540 Grate 1 - HC 6572 Channel 2 - HF 99 8" Outlet Section 4 - TJS 65 Joiner Strip 1 - ZSIKA M1 Sealant 2 - CT 80 Channel Trim 1 - AKEY Lift Out Key 2 - CDI 43W/CDP 43W/CDA 43W Drain Body*	**S-TIFAS 9980-I SS** **S-TIFAS 9980-I PS** **S-TIFAS 9980-I ORB** **S-TIFAS 9980-I SB** **S-TIFAS 9980-I BK** (Two outlets)	Satin Stainless Polished Stainless Lifetime Oil Rubbed Bronze Satin Bronze Matte Black	18	$2675 $2800 $2800 $2800 $2800
96" Complete Kit Includes: (96 1/8" L x 2 15/16" W x 1 5/8" H) 2 - TA 6548 Grate 1 - HC 6588 Channel 2 - HF 99 8" Outlet Section 4 - TJS 65 Joiner Strip 1 - ZSIKA M1 Sealant 2 - CT 96 Channel Trim 1 - AKEY Lift Out Key 2 - CDI 43W/CDP 43W/CDA 43W Drain Body*	**S-TIFAS 9996-I SS** **S-TIFAS 9996-I PS** **S-TIFAS 9996-I ORB** **S-TIFAS 9996-I SB** **S-TIFAS 9996-I BK** (Two outlets)	Satin Stainless Polished Stainless Lifetime Oil Rubbed Bronze Satin Bronze Matte Black	22	$2965 $3160 $3160 $3160 $3160

***S-TIFAS 99 Complete Kits include a Cast Iron Drain Body. If ABS or PVC drain body is desired, replace I with A or P in model number.**
(Example: S-TIFAS 9940-P SS)

*See page 169 for more information on flow rates. • See page 120 for individual components. • See page 229-230 for shipping information.

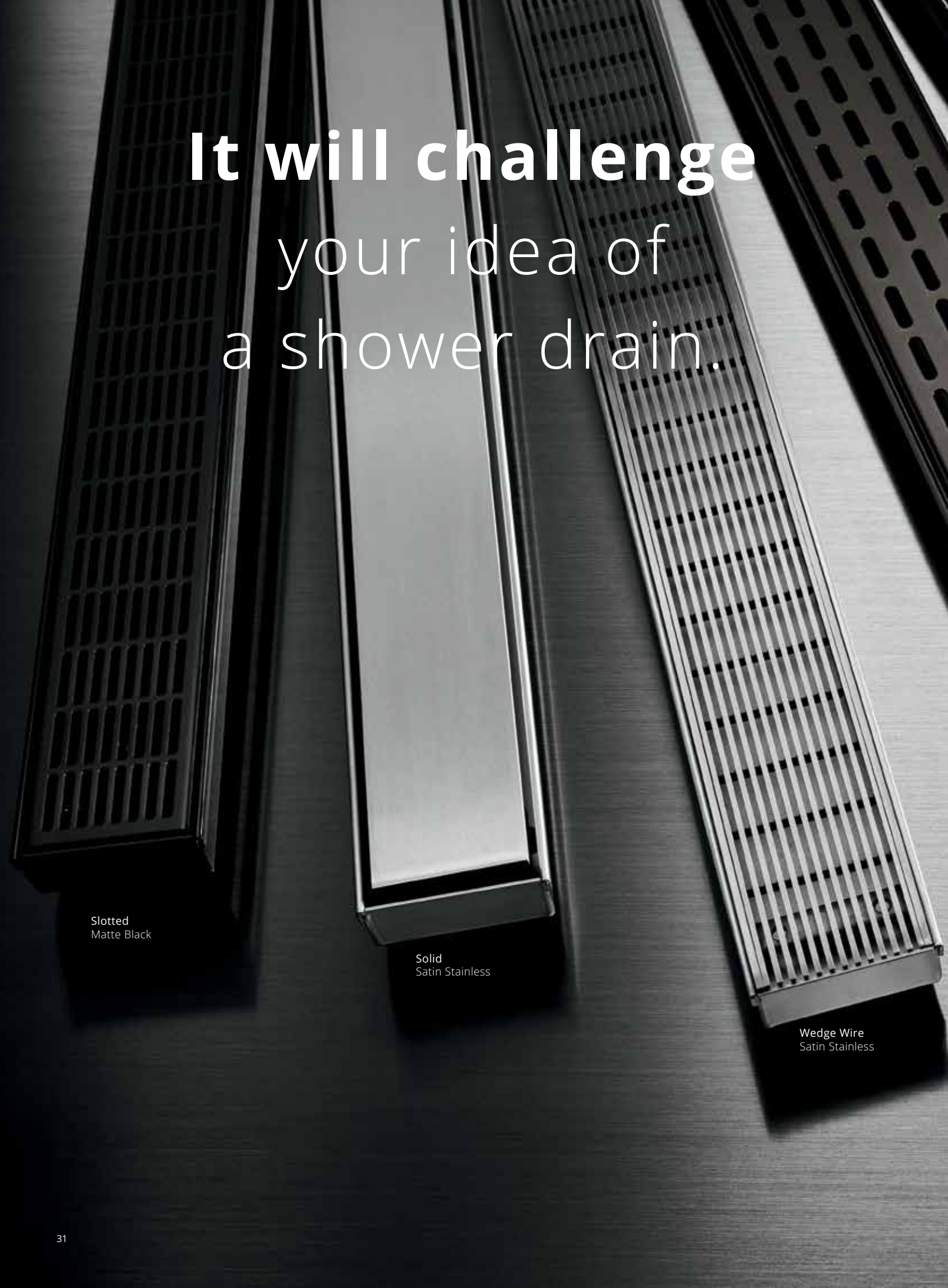
It will challenge
your idea of
a shower drain.
Slotted
Matte Black
Solid
Satin Stainless
Wedge Wire
Satin Stainless

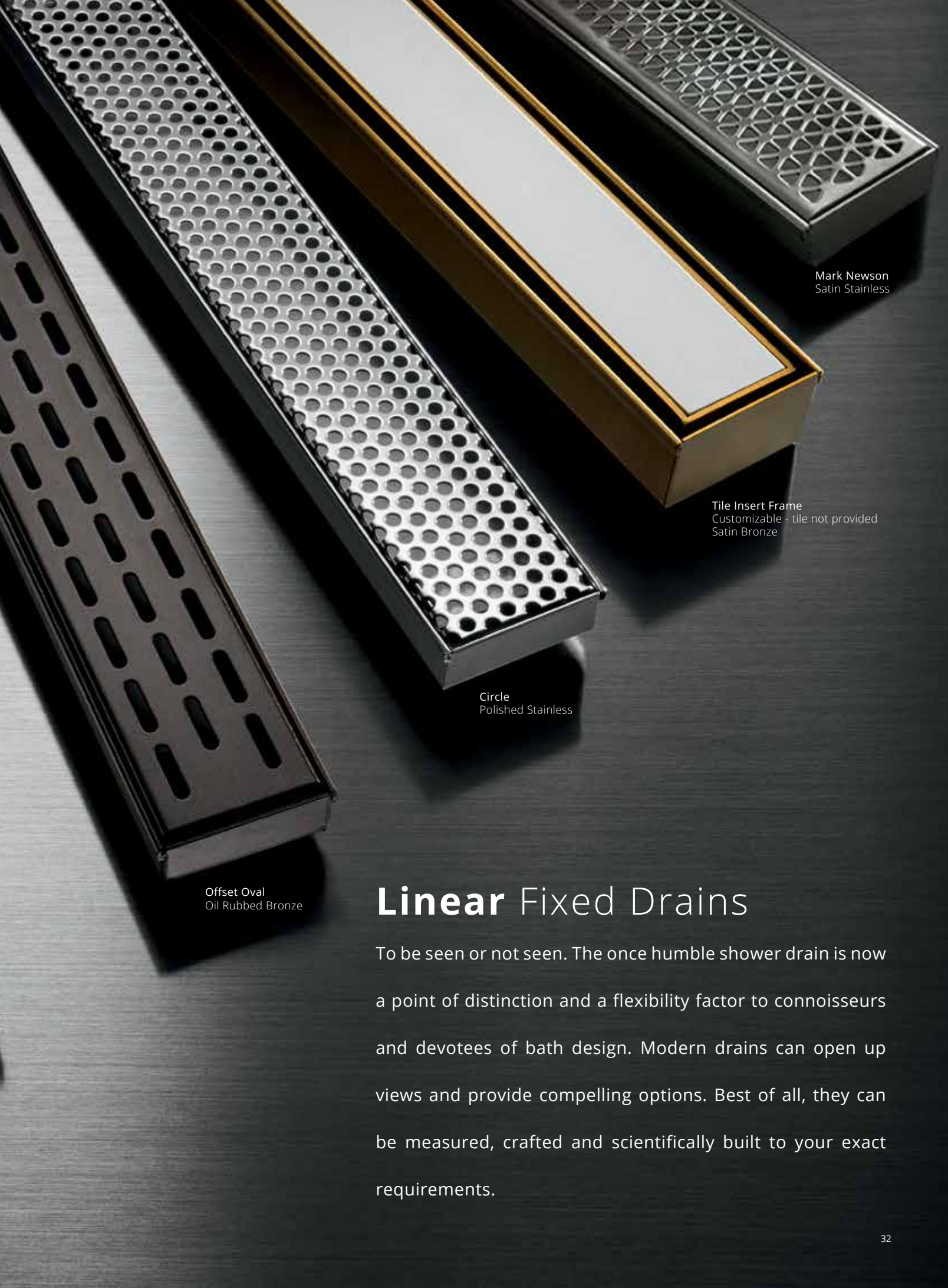

Linear Fixed Drains

To be seen or not seen. The once humble shower drain is now a point of distinction and a flexibility factor to connoisseurs and devotees of bath design. Modern drains can open up views and provide compelling options. Best of all, they can be measured, crafted and scientifically built to your exact requirements.

FX Series

Fixed Length

T
TRADITIONAL WATERPROOFING

Pitched channel with a set length and center outlet location. Standard kit sizes or custom fabrication are available.

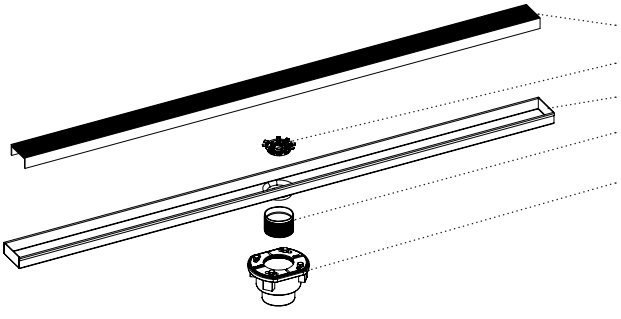

Finishes	
SS	Satin Stainless
PS	Polished Stainless
ORB	Oil Rubbed Bronze
SB	Satin Bronze
BK	Matte Black
Custom finishes available	

FXED 65

Offset Oval

Complete Kit Includes:

- EA 65 - Stainless Steel Grate
- XC 65 - Stainless Steel Channel
- TNAS - Threaded Nipple
- HS 2 - Hair Strainer
- AKEY - Lift-Out Key

32" Model	List	36" Model	List	42" Model	List	48" Model	List	60" Model	List
FXED 6532 SS	$495	**FXED 6536 SS**	$530	**FXED 6542 SS**	$595	**FXED 6548 SS**	$655	**FXED 6560 SS**	$785
FXED 6532 PS	$575	**FXED 6536 PS**	$650	**FXED 6542 PS**	$720	**FXED 6548 PS**	$795	**FXED 6560 PS**	$930
FXED 6532 ORB	$575	**FXED 6536 ORB**	$650	**FXED 6542 ORB**	$720	**FXED 6548 ORB**	$795	**FXED 6560 ORB**	$930
FXED 6532 SB	$575	**FXED 6536 SB**	$650	**FXED 6542 SB**	$720	**FXED 6548 SB**	$795	**FXED 6560 SB**	$930
FXED 6532 BK	$575	**FXED 6536 BK**	$650	**FXED 6542 BK**	$720	**FXED 6548 BK**	$795	**FXED 6560 BK**	$930
(32 ⅛" L x 2 13/16" W x 1 1/16" H) 7 lbs		(36 ⅛" L x 2 13/16" W x 1 1/16" H) 8 lbs		(42 ⅛" L x 2 13/16" W x 1 1/16" H) 8 lbs		(48 ⅛" L x 2 13/16" W x 1 1/16" H) 10 lbs		(60 ⅛" L x 2 13/16" W x 1 1/16" H) 12 lbs	

*See page 169 for more information on flow rates. • See page 123-124 for individual components. • See page 207 for shipping information.

FXMN 65

Marc Newson

Complete Kit Includes:

- MA 65 - Stainless Steel Grate
- XC 65 - Stainless Steel Channel
- TNAS - Threaded Nipple
- HS 2 - Hair Strainer
- AKEY - Lift-Out Key

32" Model	List	36" Model	List	42" Model	List	48" Model	List	60" Model	List
FXMN 6532 SS	$620	**FXMN 6536 SS**	$680	**FXMN 6542 SS**	$820	**FXMN 6548 SS**	$820	**FXMN 6560 SS**	$1070
FXMN 6532 PS	$815	**FXMN 6536 PS**	$880	**FXMN 6542 PS**	$950	**FXMN 6548 PS**	$1060	**FXMN 6560 PS**	$1265
FXMN 6532 ORB	$815	**FXMN 6536 ORB**	$880	**FXMN 6542 ORB**	$950	**FXMN 6548 ORB**	$1060	**FXMN 6560 ORB**	$1265
FXMN 6532 SB	$815	**FXMN 6536 SB**	$880	**FXMN 6542 SB**	$950	**FXMN 6548 SB**	$1060	**FXMN 6560 SB**	$1265
FXMN 6532 BK	$815	**FXMN 6536 BK**	$880	**FXMN 6542 BK**	$950	**FXMN 6548 BK**	$1060	**FXMN 6560 BK**	$1265
(32 ⅛" L x 2 13/16" W x 1 1/16" H) 7 lbs		(36 ⅛" L x 2 13/16" W x 1 1/16" H) 8 lbs		(42 ⅛" L x 2 13/16" W x 1 1/16" H) 8 lbs		(48 ⅛" L x 2 13/16" W x 1 1/16" H) 10 lbs		(60 ⅛" L x 2 13/16" W x 1 1/16" H) 12 lbs	

*See page 169 for more information on flow rates. • See page 123-124 for individual components. • See page 208 for shipping information.

T

TRADITIONAL WATERPROOFING

FX Series

Fixed Length

Specifications		
	FXED/FXMN/FXIG 65	**FXSG 65**
Grate Material:	16 ga. 304L Stainless Steel	7 ga. 304L Stainless Steel
Channel Material:	16 ga. 304L Stainless Steel	16 ga. 304L Stainless Steel
Overall Width:	2 13/16"	2 13/16"
Minimum Height:	1 5/16"	1 5/16"
Flow Rate:	9 GPM	9 GPM

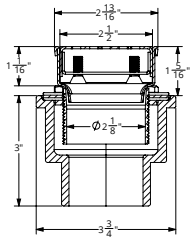

FXED/ FXMN/ FXIG 65

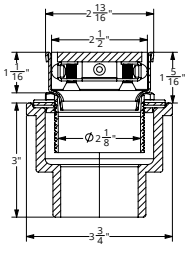

FXSG 65

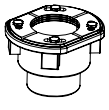

FXED/ FXMN/ FXIG/ FXSG 65 complete kits requires 2" clamping floor drain with 2" throat, which is not included in complete kit. If needed, add CDI 22/ CDA 22/ CDP 22.

CDI 22 - Cast Iron 2" throat, 2" no hub connect	$65
CDIH 22 - (For Hot Mop) Cast Iron 2" throat, 2" no hub connect	$65
CDA 22 - ABS 2" throat, 2" standard connect	$50
CDP 22 - PVC 2" throat, 2" standard connect	$50

FXIG 65

Slotted

Complete Kit Includes:

- UA 65 - Stainless Steel Grate
- XC 65 - Stainless Steel Channel
- TNAS - Threaded Nipple
- HS 2 - Hair Strainer
- AKEY - Lift-Out Key

32" Model	List	36" Model	List	42" Model	List	48" Model	List	60" Model	List
FXIG 6532 SS	$495	**FXIG 6536 SS**	$530	**FXIG 6542 SS**	$595	**FXIG 6548 SS**	$655	**FXIG 6560 SS**	$785
FXIG 6532 PS	$575	**FXIG 6536 PS**	$650	**FXIG 6542 PS**	$720	**FXIG 6548 PS**	$795	**FXIG 6560 PS**	$930
FXIG 6532 ORB	$575	**FXIG 6536 ORB**	$650	**FXIG 6542 ORB**	$720	**FXIG 6548 ORB**	$795	**FXIG 6560 ORB**	$930
FXIG 6532 SB	$575	**FXIG 6536 SB**	$650	**FXIG 6542 SB**	$720	**FXIG 6548 SB**	$795	**FXIG 6560 SB**	$930
FXIG 6532 BK	$575	**FXIG 6536 BK**	$650	**FXIG 6542 BK**	$720	**FXIG 6548 BK**	$795	**FXIG 6560 BK**	$930
(32 1/8" L x 2 13/16" W x 1 1/16" H) 7 lbs		(36 1/8" L x 2 13/16" W x 1 1/16" H) 8 lbs		(42 1/8" L x 2 13/16" W x 1 1/16" H) 8 lbs		(48 1/8" L x 2 13/16" W x 1 1/16" H) 10 lbs		(60 1/8" L x 2 13/16" W x 1 1/16" H) 12 lbs	

*See page 169 for more information on flow rates. • See page 123-124 for individual components. • See page 207-208 for shipping information.

FXSG 65

Solid

Complete Kit Includes:

- BA 65 - Stainless Steel Grate
- XC 65 - Stainless Steel Channel
- TNAS - Threaded Nipple
- HS 2 - Hair Strainer
- AKEY - Lift-Out Key

32" Model	List	36" Model	List	42" Model	List	48" Model	List	60" Model	List
FXSG 6532 SS	$875	**FXSG 6536 SS**	$915	**FXSG 6542 SS**	$945	**FXSG 6548 SS**	$975	**FXSG 6560 SS**	$1205
FXSG 6532 PS	$1020	**FXSG 6536 PS**	$1070	**FXSG 6542 PS**	$1140	**FXSG 6548 PS**	$1190	**FXSG 6560 PS**	$1400
FXSG 6532 ORB	$1020	**FXSG 6536 ORB**	$1070	**FXSG 6542 ORB**	$1140	**FXSG 6548 ORB**	$1190	**FXSG 6560 ORB**	$1400
FXSG 6532 SB	$1020	**FXSG 6536 SB**	$1070	**FXSG 6542 SB**	$1140	**FXSG 6548 SB**	$1190	**FXSG 6560 SB**	$1400
FXSG 6532 BK	$1020	**FXSG 6536 BK**	$1070	**FXSG 6542 BK**	$1140	**FXSG 6548 BK**	$1190	**FXSG 6560 BK**	$1400
(32 1/8" L x 2 13/16" W x 1 1/16" H) 7 lbs		(36 1/8" L x 2 13/16" W x 1 1/16" H) 8 lbs		(42 1/8" L x 2 13/16" W x 1 1/16" H) 8 lbs		(48 1/8" L x 2 13/16" W x 1 1/16" H) 10 lbs		(60 1/8" L x 2 13/16" W x 1 1/16" H) 12 lbs	

*See page 169 for more information on flow rates. • See page 123-124 for individual components. • See page 208 for shipping information.

FX Series

Fixed Length

T
TRADITIONAL WATERPROOFING

Pitched channel with a set length and center outlet location. Standard kit sizes or custom fabrication are available.

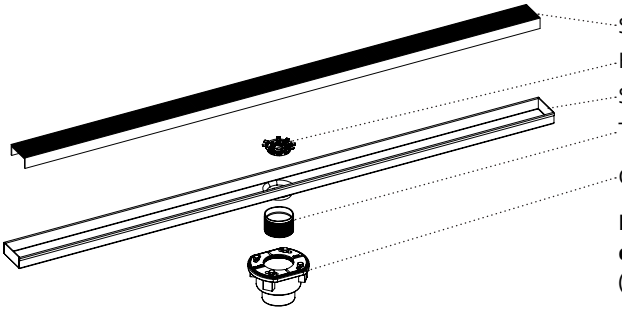

Not included in FXTIF 65 and FXAS 65 complete kits.
(See page 36 to add clamp down drain)

Included in FXAS 125 complete kits
(Material can be Cast Iron, ABS, or PVC)

Finishes	
SS	Satin Stainless
PS	Polished Stainless
ORB	Oil Rubbed Bronze
SB	Satin Bronze
BK	Matte Black
Custom finishes available	

FXTIF 65

Tile Insert

Tile not included
Open area for material (Depth 3/4")

Complete Kit Includes:

- TA 65 - Tile Insert Frame (Grate)
- IC 65 - Stainless Steel Channel
- TNAS - Threaded Nipple
- HS 2 - Hair Strainer
- AKEY - Lift-Out Key

20" Model	List	40" Model	List	48" Model	List	60" Model	List
FXTIF 6520 SS	$440	**FXTIF 6540 SS**	$720	**FXTIF 6548 SS**	$885	**FXTIF 6560 SS**	$1085
FXTIF 6520 PS	$485	**FXTIF 6540 PS**	$805	**FXTIF 6548 PS**	$970	**FXTIF 6560 PS**	$1195
FXTIF 6520 ORB	$485	**FXTIF 6540 ORB**	$805	**FXTIF 6548 ORB**	$970	**FXTIF 6560 ORB**	$1195
FXTIF 6520 SB	$485	**FXTIF 6540 SB**	$805	**FXTIF 6548 SB**	$970	**FXTIF 6560 SB**	$1195
FXTIF 6520 BK	$485	**FXTIF 6540 BK**	$805	**FXTIF 6548 BK**	$970	**FXTIF 6560 BK**	$1195
(20 ⅛" L x 2 13/16" W x 1 9/16" H) 7 lbs		(40 ⅛" L x 2 13/16" W x 1 9/16" H) 8 lbs		(48 ⅛" L x 2 13/16" W x 1 9/16" H) 10 lbs		(60 ⅛" L x 2 13/16" W x 1 9/16" H) 12 lbs	

*See page 169 for more information on flow rates. • See page 125 for individual components. • See page 208 for shipping information.

FXAS 65

Wedge Wire

Complete Kit Includes:

- WA 65 - Stainless Steel Grate
- XC 65 - Stainless Steel Channel
- TNAS - Threaded Nipple
- HS 2 - Hair Strainer
- AKEY - Lift-Out Key

32" Model	List	36" Model	List	42" Model	List	48" Model	List	60" Model	List
FXAS 6532 SS	$935	**FXAS 6536 SS**	$970	**FXAS 6542 SS**	$1085	**FXAS 6548 SS**	$1175	**FXAS 6560 SS**	$1385
FXAS 6532 PS	$1145	**FXAS 6536 PS**	$1185	**FXAS 6542 PS**	$1300	**FXAS 6548 PS**	$1360	**FXAS 6560 PS**	$1595
FXAS 6532 ORB	$1145	**FXAS 6536 ORB**	$1185	**FXAS 6542 ORB**	$1300	**FXAS 6548 ORB**	$1360	**FXAS 6560 ORB**	$1595
FXAS 6532 SB	$1145	**FXAS 6536 SB**	$1185	**FXAS 6542 SB**	$1300	**FXAS 6548 SB**	$1360	**FXAS 6560 SB**	$1595
FXAS 6532 BK	$1145	**FXAS 6536 BK**	$1185	**FXAS 6542 BK**	$1300	**FXAS 6548 BK**	$1360	**FXAS 6560 BK**	$1595
(32 ⅛" L x 2 13/16" W x 1 1/16" H) 7 lbs		(36 ⅛" L x 2 13/16" W x 1 1/16" H) 8 lbs		(42 ⅛" L x 2 13/16" W x 1 1/16" H) 8 lbs		(48 ⅛" L x 2 13/16" W x 1 1/16" H) 10 lbs		(60 ⅛" L x 2 13/16" W x 1 1/16" H) 12 lbs	

*See page 169 for more information on flow rates. • See page 123-124 for individual components. • See page 207 for shipping information.

T

TRADITIONAL WATERPROOFING

FX Series

Fixed Length

Specifications			
	FXTIF 65	**FXAS 65**	**FXAS 125**
Grate Material:	16 ga. 304L Stainless Steel	316L Stainless Steel Wedge Wire	316L Stainless Steel Wedge Wire
Channel Material:	16 ga. 304L Stainless Steel	16 ga. 304L Stainless Steel	16 ga. 304L Stainless Steel
Overall Width:	2 "	2 13/16"	5 1/4"
Minimum Height:	1 13/16"	1 5/16"	1 3/4"
Flow Rate:	9 GPM	9 GPM	21 GPM

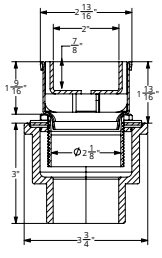

FXTIF 65

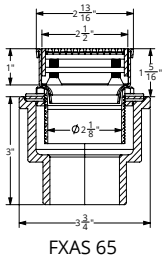

FXAS 65

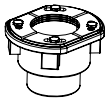

FXTIF/ FXAS 65 complete kits requires 2" clamping floor drain with 2" throat, which is not included in complete kit. If needed, add CDI 22/ CDA 22/ CDP 22.

CDI 22 - Cast Iron 2" throat, 2" no hub connect	$65
CDIH 22 - (For Hot Mop) Cast Iron 2" throat, 2" no hub connect	$65
CDA 22 - ABS 2" throat, 2" standard connect	$50
CDP 22 - PVC 2" throat, 2" standard connect	$50

HIGH FLOW

FXAS 125

Wedge Wire

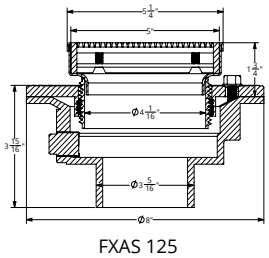

FXAS 125

Complete Kit Includes:

- SA 125 - Stainless Steel Grate
- XC 125 - Stainless Steel Channel
- TN4A - Threaded Nipple
- HS 4 - Hair Strainer
- AKEY - Lift-Out Key
- CDI 43/CDA 43/CDP 43 Drain Body

32" Model	List	36" Model	List	42" Model	List	48" Model	List	60" Model	List
FXAS 12532-I SS	$1490	**FXAS 12536-I SS**	$1610	**FXAS 12542-I SS**	$1690	**FXAS 12548-I SS**	$1805	**FXAS 12560-I SS**	$1920
FXAS 12532-I PS	$1890	**FXAS 12536-I PS**	$2010	**FXAS 12542-I PS**	$2080	**FXAS 12548-I PS**	$2205	**FXAS 12560-I PS**	$2430
FXAS 12532-I ORB	$1890	**FXAS 12536-I ORB**	$2010	**FXAS 12542-I ORB**	$2080	**FXAS 12548-I ORB**	$2205	**FXAS 12560-I ORB**	$2430
FXAS 12532-I SB	$1890	**FXAS 12536-I SB**	$2010	**FXAS 12542-I SB**	$2080	**FXAS 12548-I SB**	$2205	**FXAS 12560-I SB**	$2430
FXAS 12532-I BK	$1890	**FXAS 12536-I BK**	$2010	**FXAS 12542-I BK**	$2080	**FXAS 12548-I BK**	$2205	**FXAS 12560-I BK**	$2430
(32 1/8" L x 5 1/4" W x 1 1/16" H) 7 lbs		(36 1/8" L x 5 1/4" W x 1 1/16" H) 8 lbs		(42 1/8" L x 5 1/4" W x 1 1/16" H) 8 lbs		(48 1/8" L x 5 1/4" W x 1 1/16" H) 10 lbs		(60 1/8" L x 5 1/4" W x 1 1/16 H) 12 lbs	

*See page 169 for more information on flow rates. • See page 127 for individual components. • See page 206-207 for shipping information.

***FXAS 125 Complete Kits include a Cast Iron Drain Body. If ABS or PVC drain body is desired, replace I with A or P in model number.**
(Example:FXAS 12540-P SS)

FXAS 125 series is designed to connect to a 3" waste line

FF Series

Fixed Flange

L/F
LIQUID/FABRIC WATERPROOFING

Pitched channel with a set length and center outlet location. 2" no hub connection.
Standard kit sizes or custom fabrication (see page 109) are available.

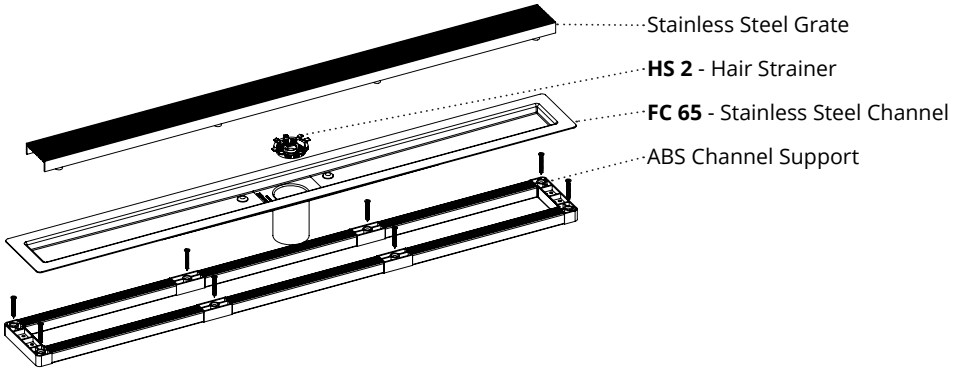

Finishes	
SS	Satin Stainless
PS	Polished Stainless
ORB	Oil Rubbed Bronze
SB	Satin Bronze
BK	Matte Black
Custom finishes available	

FFED 65

Offset Oval

Complete Kit Includes:

- EA 65 - Stainless Steel Grate
- FC 65 - Stainless Steel Channel
- HS 2 - Hair Strainer
- ABS Channel Support
- AKEY - Lift-Out Key
- ZSIKA - M1 Sealant

24" Model	List	32" Model	List	36" Model	List	42" Model	List	48" Model	List	60" Model	List
FFED 6524 SS	$400	FFED 6532 SS	$535	FFED 6536 SS	$575	FFED 6542 SS	$635	FFED 6548 SS	$690	FFED 6560 SS	$840
FFED 6524 PS	$465	FFED 6532 PS	$570	FFED 6536 PS	$645	FFED 6542 PS	$710	FFED 6548 PS	$770	FFED 6560 PS	$940
FFED 6524 ORB	$465	FFED 6532 ORB	$570	FFED 6536 ORB	$645	FFED 6542 ORB	$710	FFED 6548 ORB	$770	FFED 6560 ORB	$940
FFED 6524 SB	$465	FFED 6532 SB	$570	FFED 6536 SB	$645	FFED 6542 SB	$710	FFED 6548 SB	$770	FFED 6560 SB	$940
FFED 6524 BK	$465	FFED 6532 BK	$570	FFED 6536 BK	$645	FFED 6542 BK	$710	FFED 6548 BK	$770	FFED 6560 BK	$940
(26" L x 4 ½" W x 1 1/16" H) 7 lbs		(34" L x 4 ½" W x 1 1/16" H) 7 lbs		(38" L x 4 ½" W x 1 1/16" H) 8 lbs		(44" L x 4 ½" W x 1 1/16" H) 8 lbs		(50" L x 4 ½" W x 1 1/16" H) 10 lbs		(62" L x 4 ½" W x 1 1/16" H) 12 lbs	

*See page 169 for more information on flow rates. • See page 123-124 for individual components. • See page 202 for shipping information.

FFMN 65

Marc Newson

Complete Kit Includes:

- MA 65 - Stainless Steel Grate
- FC 65 - Stainless Steel Channel
- HS 2 - Hair Strainer
- ABS Channel Support
- DKEY - Lift-Out Key
- ZSIKA - M1 Sealant

32" Model	List	36" Model	List	42" Model	List	48" Model	List	60" Model	List
FFMN 6532 SS	$660	FFMN 6536 SS	$725	FFMN 6542 SS	$790	FFMN 6548 SS	$855	FFMN 6560 SS	$1125
FFMN 6532 PS	$810	FFMN 6536 PS	$875	FFMN 6542 PS	$940	FFMN 6548 PS	$1035	FFMN 6560 PS	$1275
FFMN 6532 ORB	$810	FFMN 6536 ORB	$875	FFMN 6542 ORB	$940	FFMN 6548 ORB	$1035	FFMN 6560 ORB	$1275
FFMN 6532 SB	$810	FFMN 6536 SB	$875	FFMN 6542 SB	$940	FFMN 6548 SB	$1035	FFMN 6560 SB	$1275
FFMN 6532 BK	$810	FFMN 6536 BK	$875	FFMN 6542 BK	$940	FFMN 6548 BK	$1035	FFMN 6560 BK	$1275
(34" L x 4 ½" W x 1 1/16 H) 7 lbs		(38" L x 4 ½" W x 1 1/16 H) 8 lbs		(44" L x 4 ½" W x 1 1/16 H) 8 lbs		(50" L x 4 ½" W x 1 1/16 H) 10 lbs		(62" L x 4 ½" W x 1 1/16 H) 12 lbs	

*See page 169 for more information on flow rates. • See page 123-124 for individual components. • See page 203 for shipping information.

L/F
LIQUID/FABRIC WATERPROOFING

FF Series
Fixed Flange

Specifications		
	FFED/FFMN/FFIG 65	**FFSG 65**
Grate Material:	16 ga. 304L Stainless Steel	7 ga. 304L Stainless Steel
Channel Material:	16 ga. 304L Stainless Steel	16 ga. 304L Stainless Steel
Finished Width:	2 1/2"	2 1/2"
Minimum Height:	1 1/16"	1 3/16"
Flow Rate:	9 GPM	9 GPM

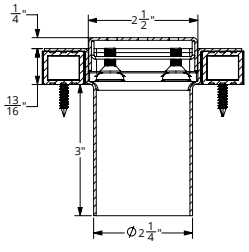

FFED/ FFMN/ FFIG 65

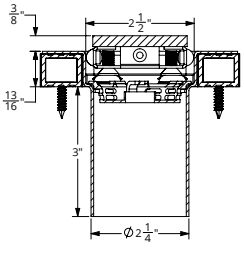

FFSG 65

FFIG 65
Slotted

Complete Kit Includes:

- UA 65 - Stainless Steel Grate
- FC 65 - Stainless Steel Channel
- HS 2 - Hair Strainer
- ABS Channel Support
- AKEY - Lift-Out Key
- ZSIKA - M1 Sealant

24" Model	List	32" Model	List	36" Model	List	42" Model	List	48" Model	List	60" Model	List
FFIG 6524 SS	$400	FFIG 6532 SS	$535	FFIG 6536 SS	$575	FFIG 6542 SS	$635	FFIG 6548 SS	$690	FFIG 6560 SS	$840
FFIG 6524 PS	$465	FFIG 6532 PS	$570	FFIG 6536 PS	$645	FFIG 6542 PS	$710	FFIG 6548 PS	$770	FFIG 6560 PS	$940
FFIG 6524 ORB	$465	FFIG 6532 ORB	$570	FFIG 6536 ORB	$645	FFIG 6542 ORB	$710	FFIG 6548 ORB	$770	FFIG 6560 ORB	$940
FFIG 6524 SB	$465	FFIG 6532 SB	$570	FFIG 6536 SB	$645	FFIG 6542 SB	$710	FFIG 6548 SB	$770	FFIG 6560 SB	$940
FFIG 6524 BK	$465	FFIG 6532 BK	$570	FFIG 6536 BK	$645	FFIG 6542 BK	$710	FFIG 6548 BK	$770	FFIG 6560 BK	$940
(26" L x 4 ½" W x 1 1/16" H) 7 lbs		(34" L x 4 ½" W x 1 1/16" H) 7 lbs		(38" L x 4 ½" W x 1 1/16" H) 8 lbs		(44" L x 4 ½" W x 1 1/16" H) 8 lbs		(50" L x 4 ½" W x 1 1/16" H) 10 lbs		(62" L x 4 ½" W x 1 1/16" H) 12 lbs	

*See page 169 for more information on flow rates. • See page 123-124 for individual components. • See page 202-203 for shipping information.

FFSG 65
Solid

Complete Kit Includes:

- BA 65 - Stainless Steel Grate
- FC 65 - Stainless Steel Channel
- HS 2 - Hair Strainer
- ABS Channel Support
- AKEY - Lift-Out Key
- ZSIKA - M1 Sealant

24" Model	List	32" Model	List	36" Model	List	42" Model	List	48" Model	List	60" Model	List
FFSG 6524 SS	$780	FFSG 6532 SS	$915	FFSG 6536 SS	$960	FFSG 6542 SS	$985	FFSG 6548 SS	$1010	FFSG 6560 SS	$1260
FFSG 6524 PS	$925	FFSG 6532 PS	$1015	FFSG 6536 PS	$1065	FFSG 6542 PS	$1130	FFSG 6548 PS	$1165	FFSG 6560 PS	$1410
FFSG 6524 ORB	$925	FFSG 6532 ORB	$1015	FFSG 6536 ORB	$1065	FFSG 6542 ORB	$1130	FFSG 6548 ORB	$1165	FFSG 6560 ORB	$1410
FFSG 6524 SB	$925	FFSG 6532 SB	$1015	FFSG 6536 SB	$1065	FFSG 6542 SB	$1130	FFSG 6548 SB	$1165	FFSG 6560 SB	$1410
FFSG 6524 BK	$925	FFSG 6532 BK	$1015	FFSG 6536 BK	$1065	FFSG 6542 BK	$1130	FFSG 6548 BK	$1165	FFSG 6560 BK	$1410
(26" L x 4 ½" W x 1 3/16" H) 7 lbs		(34" L x 4 ½" W x 1 3/16" H) 7 lbs		(38" L x 4 ½" W x 1 3/16" H) 8 lbs		(44" L x 4 ½" W x 1 3/16" H) 8 lbs		(50" L x 4 ½" W x 1 3/16" H) 10 lbs		(62" L x 4 ½" W x 1 3/16" H) 12 lbs	

*See page 169 for more information on flow rates. • See page 123-124 for individual components. • See page 203 for shipping information.

FF Series

Fixed Flange

L/F
LIQUID/FABRIC WATERPROOFING

Pitched channel with a set length and center outlet location. 2" no hub connection.
Standard kit sizes or custom fabrication (see page 109) are available.

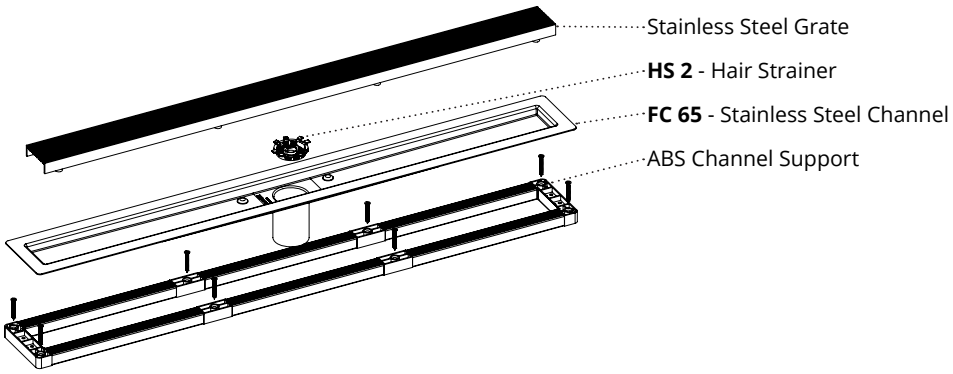

Finishes	
SS	Satin Stainless
PS	Polished Stainless
ORB	Oil Rubbed Bronze
SB	Satin Bronze
BK	Matte Black
Custom finishes available	

FFTIF 65

Tile Insert

Complete Kit Includes:

- LA 65 - Tile Insert Frame
- FC 65 - Stainless Steel Channel
- HS 2 - Hair Strainer
- ABS Channel Support
- AKEY - Lift-Out Key
- ZSIKA - M1 Sealant

24" Model	List	32" Model	List	36" Model	List	42" Model	List	48" Model	List	60" Model	List
FFTIF 6524 SS	$520	FFTIF 6532 SS	$665	FFTIF 6536 SS	$750	FFTIF 6542 SS	$790	FFTIF 6548 SS	$885	FFTIF 6560 SS	$1090
FFTIF 6524 PS	$535	FFTIF 6532 PS	$680	FFTIF 6536 PS	$770	FFTIF 6542 PS	$810	FFTIF 6548 PS	$905	FFTIF 6560 PS	$1115
FFTIF 6524 ORB	$535	FFTIF 6532 ORB	$680	FFTIF 6536 ORB	$770	FFTIF 6542 ORB	$810	FFTIF 6548 ORB	$905	FFTIF 6560 ORB	$1115
FFTIF 6524 SB	$535	FFTIF 6532 SB	$680	FFTIF 6536 SB	$770	FFTIF 6542 SB	$810	FFTIF 6548 SB	$905	FFTIF 6560 SB	$1115
FFTIF 6524 BK	$535	FFTIF 6532 BK	$680	FFTIF 6536 BK	$770	FFTIF 6542 BK	$810	FFTIF 6548 BK	$905	FFTIF 6560 BK	$1115
(26" L x 4 ½" W x 1 3/16" H) 7 lbs		(34" L x 4 ½" W x 1 3/16" H) 7 lbs		(38" L x 4 ½" W x 1 3/16" H) 8 lbs		(44" L x 4 ½" W x 1 3/16" H) 8 lbs		(50" L x 4 ½" W x 1 3/16" H) 10 lbs		(62" L x 4 ½" W x 1 3/16" H) 12 lbs	

*See page 169 for more information on flow rates. • See page 123-124 for individual components. • See page 204 for shipping information.

Tile Insert Frame - tile not included

L/F
LIQUID/FABRIC WATERPROOFING

FF Series
Fixed Flange

Specifications		
	FFTIF 65	**FFAS 65**
Grate Material:	16 ga. 304L Stainless Steel	316L Stainless Steel Wedge Wire
Channel Material:	16 ga. 304L Stainless Steel	16 ga. 304L Stainless Steel
Finished Width:	2 1/2"	2 1/2"
Minimum Height:	1 3/16"	1 1/16"
Flow Rate:	9 GPM	9 GPM

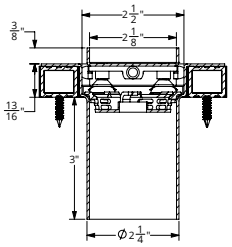

FFTIF 65

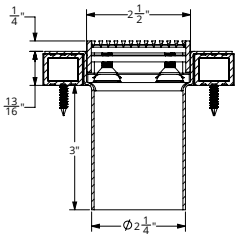

FFAS 65

FFAS 65
Wedge Wire

Complete Kit Includes:

- WA 65 - Stainless Steel Grate
- FC 65 - Stainless Steel Channel
- HS 2 - Hair Strainer
- ABS Channel Support
- AKEY - Lift-Out Key
- ZSIKA - M1 Sealant

24" Model	List	32" Model	List	36" Model	List	42" Model	List	48" Model	List	60" Model	List
FFAS 6524 SS	$710	FFAS 6532 SS	$975	FFAS 6536 SS	$1015	FFAS 6542 SS	$1125	FFAS 6548 SS	$1210	FFAS 6560 SS	$1440
FFAS 6524 PS	$870	FFAS 6532 PS	$1140	FFAS 6536 PS	$1180	FFAS 6542 PS	$1290	FFAS 6548 PS	$1335	FFAS 6560 PS	$1605
FFAS 6524 ORB	$870	FFAS 6532 ORB	$1140	FFAS 6536 ORB	$1180	FFAS 6542 ORB	$1290	FFAS 6548 ORB	$1335	FFAS 6560 ORB	$1605
FFAS 6524 SB	$870	FFAS 6532 SB	$1140	FFAS 6536 SB	$1180	FFAS 6542 SB	$1290	FFAS 6548 SB	$1335	FFAS 6560 SB	$1605
FFAS 6524 BK	$870	FFAS 6532 BK	$1140	FFAS 6536 BK	$1180	FFAS 6542 BK	$1290	FFAS 6548 BK	$1335	FFAS 6560 BK	$1605
(26" L x 4 ½" W x 1 1/16" H) 7 lbs		(34" L x 4 ½" W x 1 1/16" H) 7 lbs		(38" L x 4 ½" W x 1 1/16" H) 8 lbs		(44" L x 4 ½" W x 1 1/16" H) 8 lbs		(50" L x 4 ½" W x 1 1/16" H) 10 lbs		(62" L x 4 ½" W x 1 1/16" H) 12 lbs	

*See page 169 for more information on flow rates. • See page 123-124 for individual components. • See page 202 for shipping information.

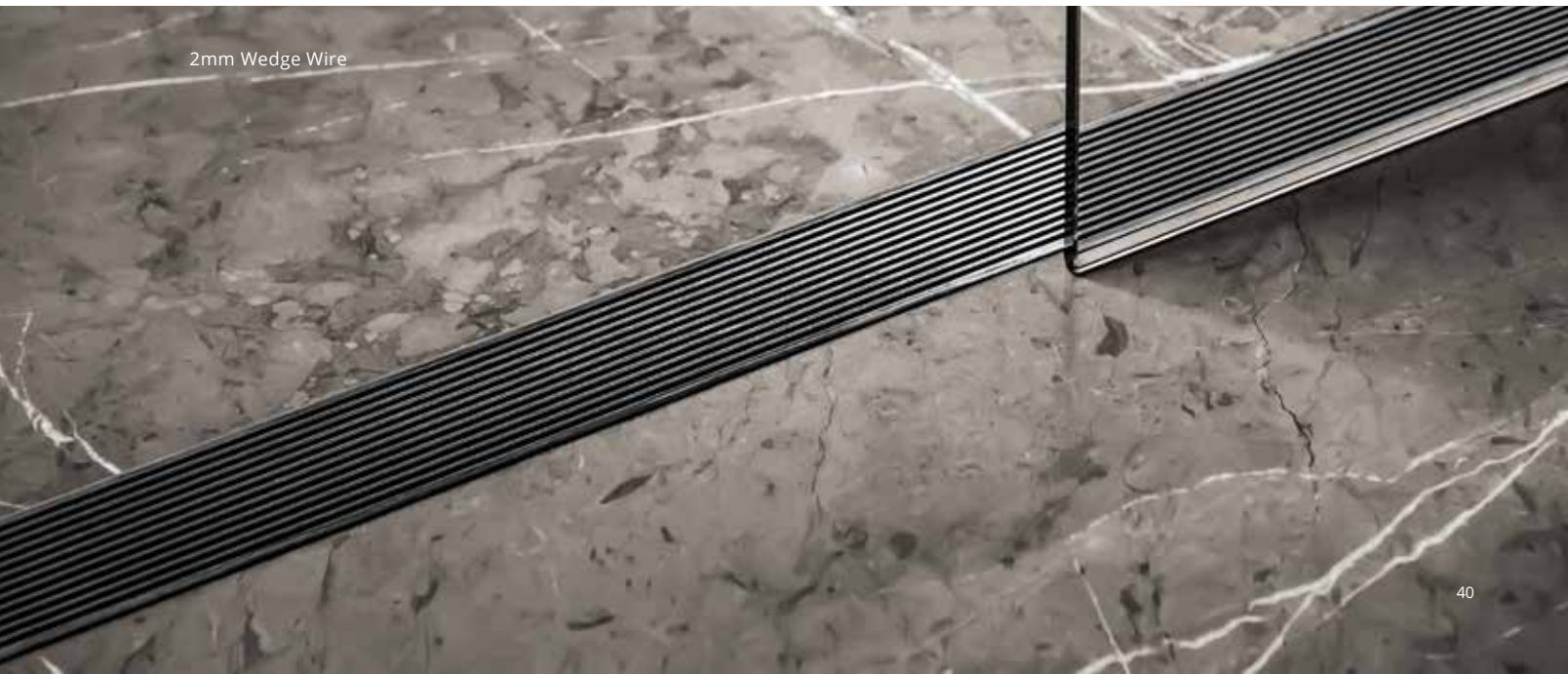
2mm Wedge Wire

FF Series

Fixed Flange

L/F
LIQUID/FABRIC WATERPROOFING

Pitched channel with a set length and center outlet location. 2" no hub connection.
Standard kit sizes or custom fabrication (see page 109) are available.

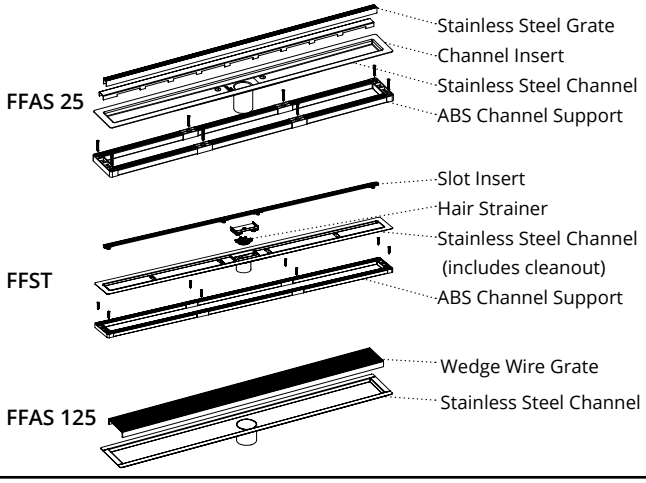

Specifications			
	FFAS 25	**FFST**	**FFAS 125**
Grate Material:	316L Stainless Steel Wedge Wire	18 ga. 304L Stainless Steel	316L Stainless Steel Wedge Wire
Channel Material:	16 ga. 304L Stainless Steel	16 ga. 304L Stainless Steel	16 ga. 304L Stainless Steel
Finished Width:	2 1/2"	5/8"	5"
Minimum Height:	1 1/16"	1 3/16"	1 1/16"
Flow Rate:	9 GPM	9 GPM	21 GPM

FFAS 25

Wedge Wire

Complete Kit Includes:

- SA 25 - Stainless Steel Grate
- FC 65 - Stainless Steel Channel
- CI 25 - Channel Insert
- ABS Channel Support
- AKEY - Lift-Out Key
- ZSIKA - M1 Sealant

32" Model	List	36" Model	List	42" Model	List	48" Model	List	60" Model	List
FFAS 2532 SS	$910	**FFAS 2536 SS**	$995	**FFAS 2542 SS**	$1210	**FFAS 2548 SS**	$1260	**FFAS 2560 SS**	$1395
FFAS 2532 PS	$1040	**FFAS 2536 PS**	$1125	**FFAS 2542 PS**	$1310	**FFAS 2548 PS**	$1360	**FFAS 2560 PS**	$1545
FFAS 2532 ORB	$1040	**FFAS 2536 ORB**	$1125	**FFAS 2542 ORB**	$1310	**FFAS 2548 ORB**	$1360	**FFAS 2560 ORB**	$1545
FFAS 2532 SB	$1040	**FFAS 2536 SB**	$1125	**FFAS 2542 SB**	$1310	**FFAS 2548 SB**	$1360	**FFAS 2560 SB**	$1545
FFAS 2532 BK	$1040	**FFAS 2536 BK**	$1125	**FFAS 2542 BK**	$1310	**FFAS 2548 BK**	$1360	**FFAS 2560 BK**	$1545
(26" L x 4 1/2" W x 1 1/16" H) 7 lbs		(38" L x 4 1/2" W x 1 1/16" H) 8 lbs		(44" L x 4 1/2" W x 1 1/16" H) 8 lbs		(50" L x 4 1/2" W x 1 1/16" H) 10 lbs		(62" L x 4 1/2" W x 1 1/16" H) 12 lbs	

*See page 169 for more information on flow rates. • See page 123-124 for individual components. • See page 201-202 for shipping information.

FFAS 125

Wedge Wire

HIGH FLOW

Complete Kit Includes:

- SA 125 - Stainless Steel Grate
- FC 125 - Stainless Steel Channel
- AKEY - Lift-Out Key

32" Model	List	36" Model	List	42" Model	List	48" Model	List	60" Model	List
FFAS 12532 SS	$1225	**FFAS 12536 SS**	$1355	**FFAS 12542 SS**	$1440	**FFAS 12548 SS**	$1540	**FFAS 12560 SS**	$1780
FFAS 12532 PS	$1525	**FFAS 12536 PS**	$1655	**FFAS 12542 PS**	$1740	**FFAS 12548 PS**	$1840	**FFAS 12560 PS**	$2080
FFAS 12532 ORB	$1525	**FFAS 12536 ORB**	$1655	**FFAS 12542 ORB**	$1740	**FFAS 12548 ORB**	$1840	**FFAS 12560 ORB**	$2080
FFAS 12532 SB	$1525	**FFAS 12536 SB**	$1655	**FFAS 12542 SB**	$1740	**FFAS 12548 SB**	$1840	**FFAS 12560 SB**	$2080
FFAS 12532 BK	$1525	**FFAS 12536 BK**	$1655	**FFAS 12542 BK**	$1740	**FFAS 12548 BK**	$1840	**FFAS 12560 BK**	$2080
(34 1/8" L x 7" W x 1 1/16" H) 7 lbs		(38 1/8" L x 7" W x 1 1/16" H) 8 lbs		(44 1/8" L x 7" W x 1 1/16" H) 8 lbs		(50 1/8" L x 7" W x 1 1/16" H) 10 lbs		(62 1/8" L x 7" W x 1 1/16" H) 12 lbs	

*See page 169 for more information on flow rates. • See page 127 for individual components. • See page 201 for shipping information.
FFAS 125 series is designed to connect to a **3" waste line**

L/F
LIQUID/FABRIC WATERPROOFING

FF Series
Fixed Flange

Finishes	
SS	Satin Stainless
PS	Polished Stainless
ORB	Oil Rubbed Bronze
SB	Satin Bronze
BK	Matte Black
Custom finishes available	

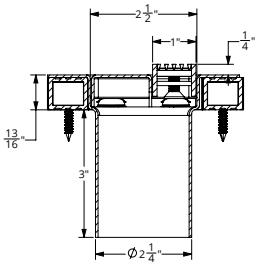

FFAS 25

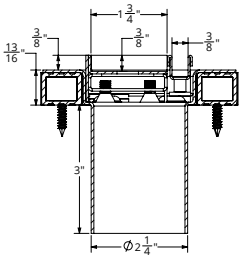

FFST

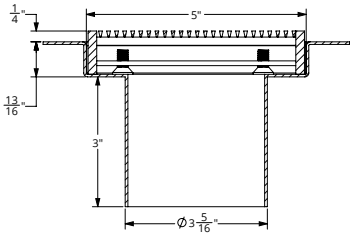

FFAS 125

NEW **FFST**

Slot

Complete Kit Includes:

- CST 65 - Stainless Steel Channel (includes tile insert cleanout)
- SLOT - Slot insert
- HS 2 - Hair Strainer
- ABS Channel Support
- WKEY - Lift-Out Key
- ZSIKA - M1 Sealant

24" Model	List	32" Model	List	36" Model	List	42" Model	List	48" Model	List	60" Model	List
FFST 24 SS	$525	**FFST 32 SS**	$650	**FFST 36 SS**	$715	**FFST 42 SS**	$810	**FFST 48 SS**	$910	**FFST 60 SS**	$1070
FFST 24 PS	$555	**FFST 32 PS**	$685	**FFST 36 PS**	$765	**FFST 42 PS**	$865	**FFST 48 PS**	$970	**FFST 60 PS**	$1145
FFST 24 ORB	$555	**FFST 32 ORB**	$685	**FFST 36 ORB**	$765	**FFST 42 ORB**	$865	**FFST 48 ORB**	$970	**FFST 60 ORB**	$1145
FFST 24 SB	$555	**FFST 32 SB**	$685	**FFST 36 SB**	$765	**FFST 42 SB**	$865	**FFST 48 SB**	$970	**FFST 60 SB**	$1145
FFST 24 BK	$555	**FFST 32 BK**	$685	**FFST 36 BK**	$765	**FFST 42 BK**	$865	**FFST 48 BK**	$970	**FFST 60 BK**	$1145
(26" L x 4 ½" W x 1 3/16 H) 7 lbs		(34" L x 4 ½" W x 1 3/16 H) 7 lbs		(38" L x 4 ½" W x 1 3/16 H) 8 lbs		(44" L x 4 ½" W x 1 3/16 H) 8 lbs		(50" L x 4 ½" W x 1 3/16 H) 10 lbs		(62" L x 4 ½" W x 1 3/16 H) 12 lbs	

*See page 169 for more information on flow rates. • See page 126 for individual components. • See page 203-204 for shipping information.

Slot Drain

FCS Series

Fixed Flange with Schluter® Kerdi Waterproofing

L/F
LIQUID/FABRIC WATERPROOFING

Pitched channel with Schluter® Kerdi fabric in a set length and center outlet location. 2" no hub connection. Standard kit sizes or custom fabrication (see page 109) available. **Lifetime Guarantee backed by Infinity Drain.**

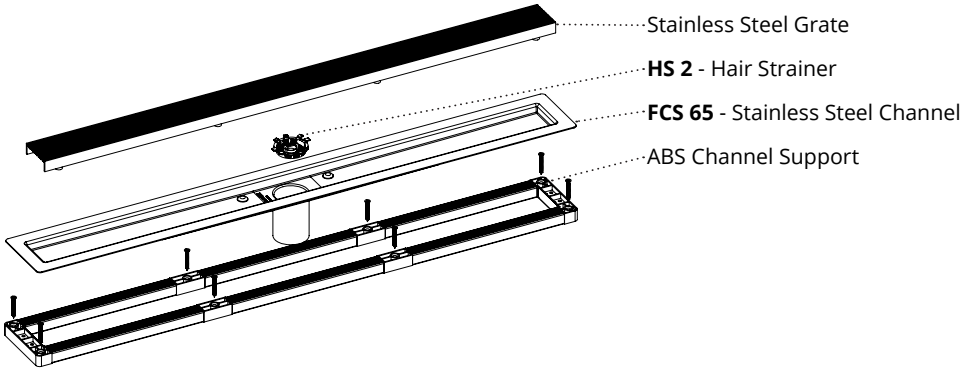

Finishes	
SS	Satin Stainless
PS	Polished Stainless
ORB	Oil Rubbed Bronze
SB	Satin Bronze
BK	Matte Black
Custom finishes available	

NEW FCSED 65

Offset Oval

Complete Kit Includes:

- EA 65 - Stainless Steel Grate
- FCS 65 - Stainless Steel Channel
- HS 2 - Hair Strainer
- ABS Channel Support
- AKEY - Lift-Out Key
- ZSIKA - M1 Sealant

24" Model	List	32" Model	List	36" Model	List	42" Model	List	48" Model	List	60" Model	List
FCSED 6524 SS	$480	FCSED 6532 SS	$645	FCSED 6536 SS	$705	FCSED 6542 SS	$805	FCSED 6548 SS	$895	FCSED 6560 SS	$1055
FCSED 6524 PS	$545	FCSED 6532 PS	$680	FCSED 6536 PS	$775	FCSED 6542 PS	$880	FCSED 6548 PS	$975	FCSED 6560 PS	$1155
FCSED 6524 ORB	$545	FCSED 6532 ORB	$680	FCSED 6536 ORB	$775	FCSED 6542 ORB	$880	FCSED 6548 ORB	$975	FCSED 6560 ORB	$1155
FCSED 6524 SB	$545	FCSED 6532 SB	$680	FCSED 6536 SB	$775	FCSED 6542 SB	$880	FCSED 6548 SB	$975	FCSED 6560 SB	$1155
FCSED 6524 BK	$545	FCSED 6532 BK	$680	FCSED 6536 BK	$775	FCSED 6542 BK	$880	FCSED 6548 BK	$975	FCSED 6560 BK	$1155
(26" L x 4 ½" W x 1 1/16" H) 7 lbs		(34" L x 4 ½" W x 1 1/16" H) 7 lbs		(38" L x 4 ½" W x 1 1/16" H) 8 lbs		(44" L x 4 ½" W x 1 1/16" H) 8 lbs		(50" L x 4 ½" W x 1 1/16" H) 10 lbs		(62" L x 4 ½" W x 1 1/16" H) 12 lbs	

*See page 169 for more information on flow rates. • See page 123-124 for individual components. • See page 199 for shipping information.

NEW FCSMN 65

Marc Newson

Complete Kit Includes:

- MA 65 - Stainless Steel Grate
- FCS 65 - Stainless Steel Channel
- HS 2 - Hair Strainer
- ABS Channel Support
- DKEY - Lift-Out Key
- ZSIKA - M1 Sealant

32" Model	List	36" Model	List	42" Model	List	48" Model	List	60" Model	List
FCSMN 6532 SS	$770	FCSMN 6536 SS	$885	FCSMN 6542 SS	$960	FCSMN 6548 SS	$1060	FCSMN 6560 SS	$1340
FCSMN 6532 PS	$920	FCSMN 6536 PS	$1005	FCSMN 6542 PS	$1110	FCSMN 6548 PS	$1240	FCSMN 6560 PS	$1490
FCSMN 6532 ORB	$920	FCSMN 6536 ORB	$1005	FCSMN 6542 ORB	$1110	FCSMN 6548 ORB	$1240	FCSMN 6560 ORB	$1490
FCSMN 6532 SB	$920	FCSMN 6536 SB	$1005	FCSMN 6542 SB	$1110	FCSMN 6548 SB	$1240	FCSMN 6560 SB	$1490
FCSMN 6532 BK	$920	FCSMN 6536 BK	$1005	FCSMN 6542 BK	$1110	FCSMN 6548 BK	$1240	FCSMN 6560 BK	$1490
(34" L x 4 ½" W x 1 1/16" H) 7 lbs		(38" L x 4 ½" W x 1 1/16" H) 8 lbs		(44" L x 4 ½" W x 1 1/16" H) 8 lbs		(50" L x 4 ½" W x 1 1/16" H) 10 lbs		(62" L x 4 ½" W x 1 1/16" H) 12 lbs	

*See page 169 for more information on flow rates. • See page 123-124 for individual components. • See page 200 for shipping information.

L/F
LIQUID/FABRIC WATERPROOFING

FCS Series

Fixed Flange with Schluter® Kerdi Waterproofing

Specifications		
	FCSED/FCSMN/FCSIG 65	FCSSG 65
Grate Material:	16 ga. 304L Stainless Steel	7 ga. 304L Stainless Steel
Channel Material:	16 ga. 304L Stainless Steel	304L Stainless Steel
Finished Width:	2 1/2"	2 1/2"
Minimum Height:	1 1/16"	1 3/16"
Flow Rate:	9 GPM	9 GPM

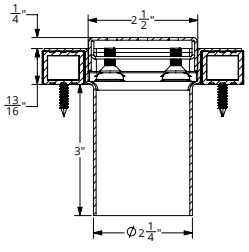

FCSED/ FCSMN/ FCSIG 65

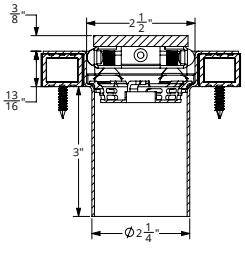

FCSSG 65

NEW FCSIG 65

Slotted

Complete Kit Includes:

- UA 65 - Stainless Steel Grate
- FCS 65 - Stainless Steel Channel
- HS 2 - Hair Strainer
- ABS Channel Support
- AKEY - Lift-Out Key
- ZSIKA - M1 Sealant

24" Model	List	32" Model	List	36" Model	List	42" Model	List	48" Model	List	60" Model	List
FCSIG 6524 SS	$480	FCSIG 6532 SS	$645	FCSIG 6536 SS	$705	FCSIG 6542 SS	$805	FCSIG 6548 SS	$895	FCSIG 6560 SS	$1055
FCSIG 6524 PS	$545	FCSIG 6532 PS	$680	FCSIG 6536 PS	$775	FCSIG 6542 PS	$880	FCSIG 6548 PS	$975	FCSIG 6560 PS	$1155
FCSIG 6524 ORB	$545	FCSIG 6532 ORB	$680	FCSIG 6536 ORB	$775	FCSIG 6542 ORB	$880	FCSIG 6548 ORB	$975	FCSIG 6560 ORB	$1155
FCSIG 6524 SB	$545	FCSIG 6532 SB	$680	FCSIG 6536 SB	$775	FCSIG 6542 SB	$880	FCSIG 6548 SB	$975	FCSIG 6560 SB	$1155
FCSIG 6524 BK	$545	FCSIG 6532 BK	$680	FCSIG 6536 BK	$775	FCSIG 6542 BK	$880	FCSIG 6548 BK	$975	FCSIG 6560 BK	$1155
(26" L x 4 1/2" W x 1 1/16" H) 7 lbs		(34" L x 4 1/2" W x 1 1/16" H) 7 lbs		(38" L x 4 1/2" W x 1 1/16" H) 8 lbs		(42" L x 4 1/2" W x 1 1/16" H) 8 lbs		(50" L x 4 1/2" W x 1 1/16" H) 10 lbs		(62" L x 4 1/2" W x 1 1/16" H) 12 lbs	

*See page 169 for more information on flow rates. • See page 123-124 for individual components. • See page 199-200 for shipping information.

NEW FCSSG 65

Solid

Complete Kit Includes:

- BA 65 - Stainless Steel Grate
- FCS 65 - Stainless Steel Channel
- HS 2 - Hair Strainer
- ABS Channel Support
- AKEY - Lift-Out Key
- ZSIKA - M1 Sealant

24" Model	List	32" Model	List	36" Model	List	42" Model	List	48" Model	List	60" Model	List
FCSSG 6524 SS	$910	FCSSG 6532 SS	$1025	FCSSG 6536 SS	$1090	FCSSG 6542 SS	$1155	FCSSG 6548 SS	$1215	FCSSG 6560 SS	$1475
FCSSG 6524 PS	$1025	FCSSG 6532 PS	$1150	FCSSG 6536 PS	$1225	FCSSG 6542 PS	$1300	FCSSG 6548 PS	$1370	FCSSG 6560 PS	$1625
FCSSG 6524 ORB	$1025	FCSSG 6532 ORB	$1150	FCSSG 6536 ORB	$1225	FCSSG 6542 ORB	$1300	FCSSG 6548 ORB	$1370	FCSSG 6560 ORB	$1625
FCSSG 6524 SB	$1025	FCSSG 6532 SB	$1150	FCSSG 6536 SB	$1225	FCSSG 6542 SB	$1300	FCSSG 6548 SB	$1370	FCSSG 6560 SB	$1625
FCSSG 6524 BK	$1025	FCSSG 6532 BK	$1150	FCSSG 6536 BK	$1225	FCSSG 6542 BK	$1300	FCSSG 6548 BK	$1370	FCSSG 6560 BK	$1625
(26" L x 4 1/2" W x 1 3/16" H) 7 lbs		(34" L x 4 1/2" W x 1 3/16" H) 7 lbs		(38" L x 4 1/2" W x 1 3/16" H) 8 lbs		(44" L x 4 1/2" W x 1 3/16" H) 8 lbs		(50" L x 4 1/2" W x 1 3/16" H) 10 lbs		(62" L x 4 1/2" W x 1 3/16" H) 12 lbs	

*See page 169 for more information on flow rates. • See page 123-124 for individual components. • See page 200 for shipping information.

FCS Series

Fixed Flange with Schluter® Kerdi Waterproofing

L/F
LIQUID/FABRIC WATERPROOFING

Pitched channel with Schluter® Kerdi fabric in a set length and center outlet location. 2" no hub connection. Standard kit sizes or custom fabrication (see page 109) available. **Lifetime Guarantee backed by Infinity Drain.**

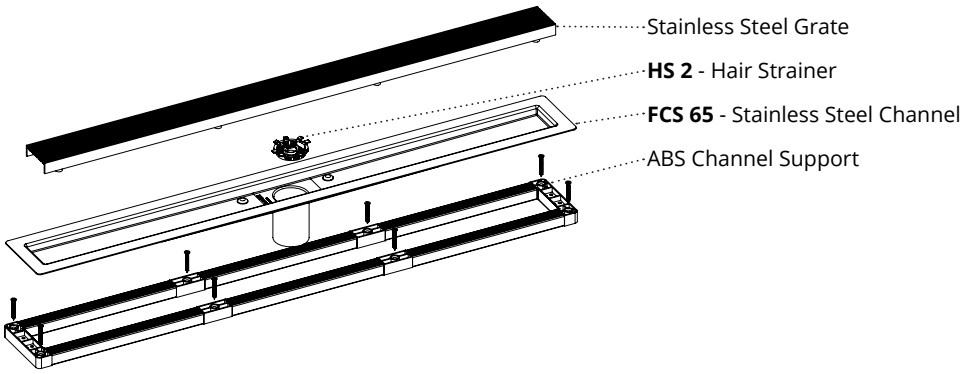

Finishes	
SS	Satin Stainless
PS	Polished Stainless
ORB	Oil Rubbed Bronze
SB	Satin Bronze
BK	Matte Black
Custom finishes available	

NEW **FCSTIF 65**

Tile Insert

Tile not included
Open area for material (Depth 3/8")

Complete Kit Includes:

- LA 65 - Tile Insert Frame
- FCS 65 - Stainless Steel Channel
- HS 2 - Hair Strainer
- ABS Channel Support
- AKEY - Lift-Out Key
- ZSIKA - M1 Sealant

24" Model	List	32" Model	List	36" Model	List	42" Model	List	48" Model	List	60" Model	List
FCSTIF 6524 SS	$600	FCSTIF 6532 SS	$775	FCSTIF 6536 SS	$880	FCSTIF 6542 SS	$960	FCSTIF 6548 SS	$1090	FCSTIF 6560 SS	$1305
FCSTIF 6524 PS	$615	FCSTIF 6532 PS	$790	FCSTIF 6536 PS	$900	FCSTIF 6542 PS	$980	FCSTIF 6548 PS	$1110	FCSTIF 6560 PS	$1330
FCSTIF 6524 ORB	$615	FCSTIF 6532 ORB	$790	FCSTIF 6536 ORB	$900	FCSTIF 6542 ORB	$980	FCSTIF 6548 ORB	$1110	FCSTIF 6560 ORB	$1330
FCSTIF 6524 SB	$615	FCSTIF 6532 SB	$790	FCSTIF 6536 SB	$900	FCSTIF 6542 SB	$980	FCSTIF 6548 SB	$1110	FCSTIF 6560 SB	$1330
FCSTIF 6524 BK	$615	FCSTIF 6532 BK	$790	FCSTIF 6536 BK	$900	FCSTIF 6542 BK	$980	FCSTIF 6548 BK	$1110	FCSTIF 6560 BK	$1330
(26" L x 4 ½" W x 1 3/16" H) 7 lbs		(34" L x 4 ½" W x 1 3/16" H) 7 lbs		(38" L x 4 ½" W x 1 3/16" H) 8 lbs		(44" L x 4 ½" W x 1 3/16" H) 8 lbs		(50" L x 4 ½" W x 1 3/16" H) 10 lbs		(62" L x 4 ½" W x 1 3/16" H) 12 lbs	

*See page 169 for more information on flow rates. • See page 123-124 for individual components. • See page 201 for shipping information.

Tile Insert Frame - tile not included

L/F
LIQUID/FABRIC WATERPROOFING

FCS Series

Fixed Flange with Schluter® Kerdi Waterproofing

Specifications		
	FCSTIF 65	**FCSAS 65**
Grate Material:	16 ga. 304L Stainless Steel	316L Stainless Steel Wedge Wire
Channel Material:	16 ga. 304L Stainless Steel	16 ga. 304L Stainless Steel
Finished Width:	2 1/2"	2 1/2"
Minimum Height:	1 3/16"	1 1/16"
Flow Rate:	9 GPM	9 GPM

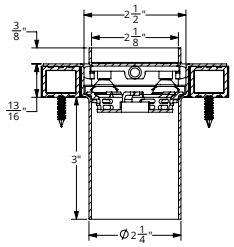

FCSTIF 65

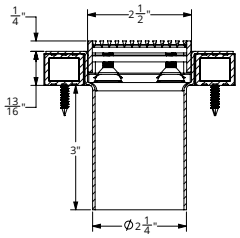

FCSAS 65

NEW **FCSAS 65**

Wedge Wire

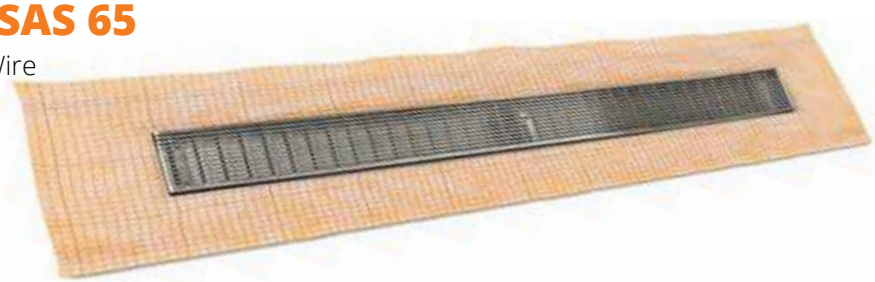

Complete Kit Includes:

- WA 65 - Stainless Steel Grate
- FCS 65 - Stainless Steel Channel
- HS 2 - Hair Strainer
- ABS Channel Support
- AKEY - Lift-Out Key
- ZSIKA - M1 Sealant

24" Model	List	32" Model	List	36" Model	List	42" Model	List	48" Model	List	60" Model	List
FCSAS 6524 SS	$775	FCSAS 6532 SS	$1060	FCSAS 6536 SS	$1120	FCSAS 6542 SS	$1270	FCSAS 6548 SS	$1395	FCSAS 6560 SS	$1630
FCSAS 6524 PS	$930	FCSAS 6532 PS	$1220	FCSAS 6536 PS	$1280	FCSAS 6542 PS	$1425	FCSAS 6548 PS	$1555	FCSAS 6560 PS	$1780
FCSAS 6524 ORB	$930	FCSAS 6532 ORB	$1220	FCSAS 6536 ORB	$1280	FCSAS 6542 ORB	$1425	FCSAS 6548 ORB	$1555	FCSAS 6560 ORB	$1780
FCSAS 6524 SB	$930	FCSAS 6532 SB	$1220	FCSAS 6536 SB	$1280	FCSAS 6542 SB	$1425	FCSAS 6548 SB	$1555	FCSAS 6560 SB	$1780
FCSAS 6524 BK	$930	FCSAS 6532 BK	$1220	FCSAS 6536 BK	$1280	FCSAS 6542 BK	$1425	FCSAS 6548 BK	$1555	FCSAS 6560 BK	$1780
(26" L x 4 1/2" W x 1 1/16" H) 7 lbs		(34" L x 4 1/2" W x 1 1/16" H) 7 lbs		(38" L x 4 1/2" W x 1 1/16" H) 8 lbs		(44" L x 4 1/2" W x 1 1/16" H) 8 lbs		(50" L x 4 1/2" W x 1 1/16" H) 10 lbs		(62" L x 4 1/2" W x 1 1/16" H) 12 lbs	

*See page 169 for more information on flow rates. • See page 123-124 for individual components. • See page 199 for shipping information.

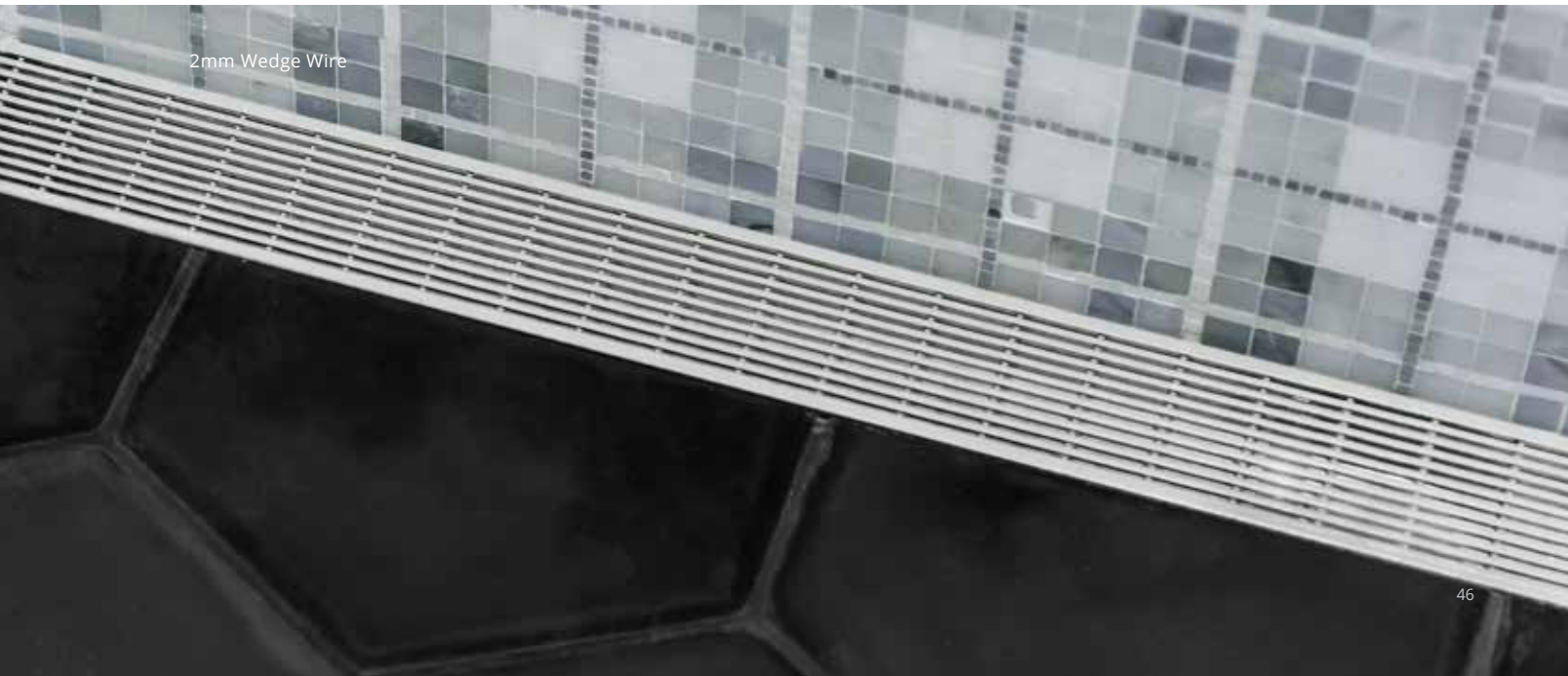

FCS Series

Fixed Flange with Schluter® Kerdi Waterproofing

L/F
LIQUID/FABRIC WATERPROOFING

Pitched channel with Schluter® Kerdi fabric in a set length and center outlet location. 2" no hub connection. Standard kit sizes or custom fabrication (see page 109) available. **Lifetime Guarantee backed by Infinity Drain.**

FCSAS 25

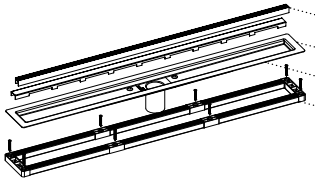

FCSAS 125

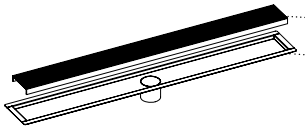

Specifications			
	FCSAS 25	**FCSST**	**FCSAS 125**
Grate Material:	316L Stainless Steel Wedge Wire	18 ga. 304L Stainless Steel	316L Stainless Steel Wedge Wire
Channel Material:	16 ga. 304L Stainless Steel	16 ga. 304L Stainless Steel	16 ga. 304L Stainless Steel
Finished Width:	2 1/2"	5/8"	5"
Minimum Height:	1 1/16"	1 3/16"	1 1/16"
Flow Rate:	9 GPM	9 GPM	21 GPM

NEW FCSAS 25

Wedge Wire

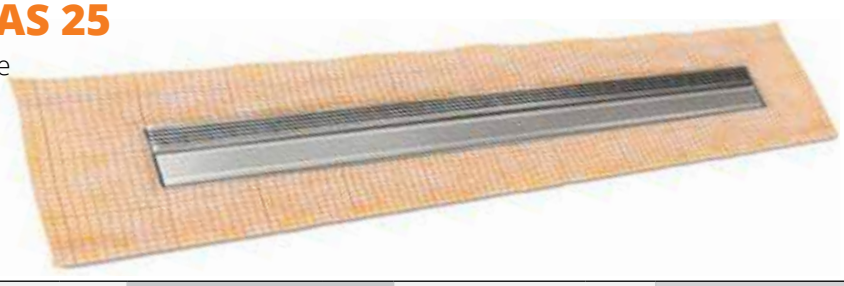

Complete Kit Includes:

- SA 25 - Stainless Steel Grate
- FC 65 - Stainless Steel Channel
- CI 25 - Channel Insert
- ABS Channel Support
- AKEY - Lift-Out Key
- ZSIKA - M1 Sealant

32" Model	List	36" Model	List	42" Model	List	48" Model	List	60" Model	List
FCSAS 2532 SS	$1015	**FCSAS 2536 SS**	$1110	**FCSAS 2542 SS**	$1345	**FCSAS 2548 SS**	$1415	**FCSAS 2560 SS**	$1590
FCSAS 2532 PS	$1145	**FCSAS 2536 PS**	$1240	**FCSAS 2542 PS**	$1455	**FCSAS 2548 PS**	$1515	**FCSAS 2560 PS**	$1740
FCSAS 2532 ORB	$1145	**FCSAS 2536 ORB**	$1240	**FCSAS 2542 ORB**	$1455	**FCSAS 2548 ORB**	$1515	**FCSAS 2560 ORB**	$1740
FCSAS 2532 SB	$1145	**FCSAS 2536 SB**	$1240	**FCSAS 2542 SB**	$1455	**FCSAS 2548 SB**	$1515	**FCSAS 2560 SB**	$1740
FCSAS 2532 BK	$1145	**FCSAS 2536 BK**	$1240	**FCSAS 2542 BK**	$1455	**FCSAS 2548 BK**	$1515	**FCSAS 2560 BK**	$1740
(26" L x 4 1/2" W x 1 3/16" H) 7 lbs		(38" L x 4 1/2" W x 1 3/16" H) 8 lbs		(44" L x 4 1/2" W x 1 3/16" H) 8 lbs		(50" L x 4 1/2" W x 1 3/16" H) 10 lbs		(62" L x 4 1/2" W x 1 3/16" H) 12 lbs	

*See page 169 for more information on flow rates. • See page 123-124 for individual components. • See page 198-199 for shipping information.

NEW FCSAS 125

Wedge Wire

HIGH FLOW

Complete Kit Includes:

- SA 125 - Stainless Steel Grate
- FC 125 - Stainless Steel Channel
- AKEY - Lift-Out Key

32" Model	List	36" Model	List	42" Model	List	48" Model	List	60" Model	List
FCSAS 12532 SS	$1460	**FCSAS 12536 SS**	$1615	**FCSAS 12542 SS**	$1730	**FCSAS 12548 SS**	$1860	**FCSAS 12560 SS**	$2155
FCSAS 12532 PS	$1760	**FCSAS 12536 PS**	$1915	**FCSAS 12542 PS**	$2030	**FCSAS 12548 PS**	$2160	**FCSAS 12560 PS**	$2455
FCSAS 12532 ORB	$1760	**FCSAS 12536 ORB**	$1915	**FCSAS 12542 ORB**	$2030	**FCSAS 12548 ORB**	$2160	**FCSAS 12560 ORB**	$2455
FCSAS 12532 SB	$1760	**FCSAS 12536 SB**	$1915	**FCSAS 12542 SB**	$2030	**FCSAS 12548 SB**	$2160	**FCSAS 12560 SB**	$2455
FCSAS 12532 BK	$1760	**FCSAS 12536 BK**	$1915	**FCSAS 12542 BK**	$2030	**FCSAS 12548 BK**	$2160	**FCSAS 12560 BK**	$2455
(34 1/8" L x 7" W x 1 1/16" H) 7 lbs		(38 1/8" L x 7" W x 1 1/16" H) 8 lbs		(44 1/8" L x 7" W x 1 1/16" H) 8 lbs		(50 1/8" L x 7" W x 1 1/16" H) 10 lbs		(62 1/8" L x 7" W x 1 1/16" H) 12 lbs	

*See page 169 for more information on flow rates. • See page 127 for individual components. • See page 198 for shipping information.
FCSAS 125 series is designed as a no hub connection to a **3" waste line**

L/F
LIQUID/FABRIC WATERPROOFING

FCS Series

Fixed Flange with Schluter® Kerdi Waterproofing

Finishes	
SS	Satin Stainless
PS	Polished Stainless
ORB	Oil Rubbed Bronze
SB	Satin Bronze
BK	Matte Black
Custom finishes available	

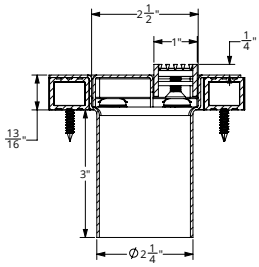

FCSAS 25

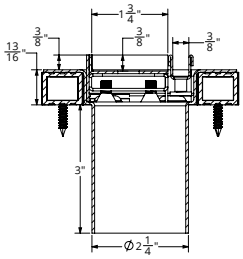

FCSST

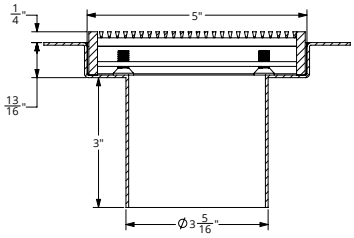

FCSAS 125

NEW **FCSST**

Slot

Complete Kit Includes:

- CSST 65 - Stainless Steel Channel (includes tile insert cleanout)
- SLOT - Slot insert
- HS 2 - Hair Strainer
- ABS Channel Support
- WKEY - Lift-Out Key
- ZSIKA - M1 Sealant

24" Model	List	32" Model	List	36" Model	List	42" Model	List	48" Model	List	60" Model	List
FCSST 24 SS	$760	FCSST 32 SS	$950	FCSST 36 SS	$1030	FCSST 42 SS	$1090	FCSST 48 SS	$1155	FCSST 60 SS	$1345
FCSST 24 PS	$775	FCSST 32 PS	$965	FCSST 36 PS	$1050	FCSST 42 PS	$1110	FCSST 48 PS	$1175	FCSST 60 PS	$1370
FCSST 24 ORB	$775	FCSST 32 ORB	$965	FCSST 36 ORB	$1050	FCSST 42 ORB	$1110	FCSST 48 ORB	$1175	FCSST 60 ORB	$1370
FCSST 24 SB	$775	FCSST 32 SB	$965	FCSST 36 SB	$1050	FCSST 42 SB	$1110	FCSST 48 SB	$1175	FCSST 60 SB	$1370
FCSST 24 BK	$775	FCSST 32 BK	$965	FCSST 36 BK	$1050	FCSST 42 BK	$1110	FCSST 48 BK	$1175	FCSST 60 BK	$1370
(26" L x 4 ½" W x 1 1/16" H) 7 lbs		(34" L x 4 ½" W x 1 1/16" H) 7 lbs		(38" L x 4 ½" W x 1 1/16" H) 8 lbs		(44" L x 4 ½" W x 1 1/16" H) 8 lbs		(50" L x 4 ½" W x 1 1/16" H) 10 lbs		(62" L x 4 ½" W x 1 1/16" H) 12 lbs	

*See page 169 for more information on flow rates. • See page 126 for individual components. • See page 200-201 for shipping information.

Slot Drain

FCB Series

Fixed Flange for Double Waterproofing

T TRADITIONAL WATERPROOFING

L/F LIQUID/FABRIC WATERPROOFING

Pitched channel with a set length and center outlet location. 2" threaded connection. Standard kit sizes or custom fabrication (see page 109) are available.

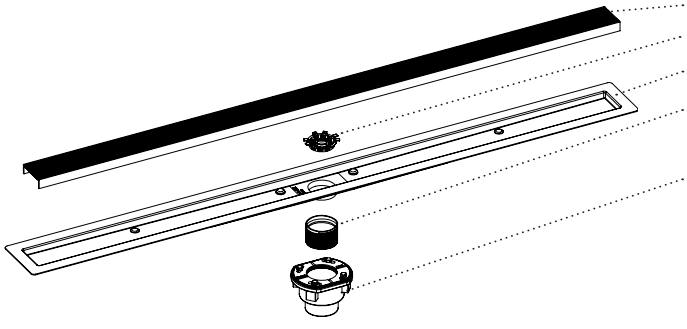

Finishes	
SS	Satin Stainless
PS	Polished Stainless
ORB	Oil Rubbed Bronze
SB	Satin Bronze
BK	Matte Black
Custom finishes available	

NEW

FCBED 65

Offset Oval

Complete Kit Includes:

- EA 65 - Stainless Steel Grate
- FCB 65 - Stainless Steel Channel (Includes TNAS - Threaded Nipple)
- HS 2 - Hair Strainer
- AKEY - Lift-Out Key

24" Model	List	32" Model	List	36" Model	List	42" Model	List	48" Model	List	60" Model	List
FCBED 6524 SS	$435	FCBED 6532 SS	$590	FCBED 6536 SS	$630	FCBED 6542 SS	$690	FCBED 6548 SS	$745	FCBED 6560 SS	$895
FCBED 6524 PS	$500	FCBED 6532 PS	$625	FCBED 6536 PS	$700	FCBED 6542 PS	$765	FCBED 6548 PS	$825	FCBED 6560 PS	$995
FCBED 6524 ORB	$500	FCBED 6532 ORB	$625	FCBED 6536 ORB	$700	FCBED 6542 ORB	$765	FCBED 6548 ORB	$825	FCBED 6560 ORB	$995
FCBED 6524 SB	$500	FCBED 6532 SB	$625	FCBED 6536 SB	$700	FCBED 6542 SB	$765	FCBED 6548 SB	$825	FCBED 6560 SB	$995
FCBED 6524 BK	$500	FCBED 6532 BK	$625	FCBED 6536 BK	$700	FCBED 6542 BK	$765	FCBED 6548 BK	$825	FCBED 6560 BK	$995
(26" L x 4 ½" W x 1 1/16" H) 7 lbs		(34" L x 4 ½" W x 1 1/16" H) 7 lbs		(38" L x 4 ½" W x 1 1/16" H) 8 lbs		(44" L x 4 ½" W x 1 1/16" H) 8 lbs		(50" L x 4 ½" W x 1 1/16" H) 10 lbs		(62" L x 4 ½" W x 1 1/16" H) 12 lbs	

*See page 169 for more information on flow rates. • See page 123-124 for individual components. • See page 196 for shipping information.

NEW

FCBMN 65

Marc Newson

Complete Kit Includes:

- MA 65 - Stainless Steel Grate
- FCB 65 - Stainless Steel Channel (Includes TNAS - Threaded Nipple)
- HS 2 - Hair Strainer
- DKEY - Lift-Out Key

32" Model	List	36" Model	List	42" Model	List	48" Model	List	60" Model	List
FCBMN 6532 SS	$715	FCBMN 6536 SS	$780	FCBMN 6542 SS	$845	FCBMN 6548 SS	$910	FCBMN 6560 SS	$1180
FCBMN 6532 PS	$865	FCBMN 6536 PS	$930	FCBMN 6542 PS	$995	FCBMN 6548 PS	$1090	FCBMN 6560 PS	$1330
FCBMN 6532 ORB	$865	FCBMN 6536 ORB	$930	FCBMN 6542 ORB	$995	FCBMN 6548 ORB	$1090	FCBMN 6560 ORB	$1330
FCBMN 6532 SB	$865	FCBMN 6536 SB	$930	FCBMN 6542 SB	$995	FCBMN 6548 SB	$1090	FCBMN 6560 SB	$1330
FCBMN 6532 BK	$865	FCBMN 6536 BK	$930	FCBMN 6542 BK	$995	FCBMN 6548 BK	$1090	FCBMN 6560 BK	$1330
(34" L x 4 ½" W x 1 1/16" H) 7 lbs		(38" L x 4 ½" W x 1 1/16" H) 8 lbs		(44" L x 4 ½" W x 1 1/16" H) 8 lbs		(50" L x 4 ½" W x 1 1/16" H) 10 lbs		(62" L x 4 ½" W x 1 1/16" H) 12 lbs	

*See page 169 for more information on flow rates. • See page 124 for individual components. • See page 197 for shipping information.

T
TRADITIONAL WATERPROOFING

L/F
LIQUID/FABRIC WATERPROOFING

FCB Series

Fixed Flange for Double Waterproofing

Specifications		
	FCBED/FCBED/FCBIG 65	**FCBSG 65**
Grate Material:	16 ga. 304L Stainless Steel	7 ga. 304L Stainless Steel
Channel Material:	16 ga. 304L Stainless Steel	16 ga. 304L Stainless Steel
Finished Width:	2 1/2"	2 1/2"
Minimum Height:	1 5/16"	1 7/16"
Flow Rate:	9 GPM	9 GPM

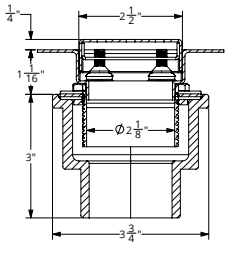

FCBED/ FCBMN/ FCBIG 65

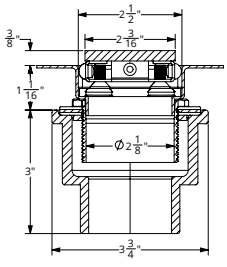

FCBSG 65

NEW **FCBIG 65**

Slotted

Complete Kit Includes:

- UA 65 - Stainless Steel Grate
- FCB 65 - Stainless Steel Channel (Includes TNAS - Threaded Nipple)
- HS 2 - Hair Strainer
- AKEY - Lift-Out Key

24" Model	List	32" Model	List	36" Model	List	42" Model	List	48" Model	List	60" Model	List
FCBIG 6524 SS	$435	FCBIG 6532 SS	$590	FCBIG 6536 SS	$630	FCBIG 6542 SS	$690	FCBIG 6548 SS	$745	FCBIG 6560 SS	$895
FCBIG 6524 PS	$500	FCBIG 6532 PS	$625	FCBIG 6536 PS	$700	FCBIG 6542 PS	$765	FCBIG 6548 PS	$825	FCBIG 6560 PS	$995
FCBIG 6524 ORB	$500	FCBIG 6532 ORB	$625	FCBIG 6536 ORB	$700	FCBIG 6542 ORB	$765	FCBIG 6548 ORB	$825	FCBIG 6560 ORB	$995
FCBIG 6524 SB	$500	FCBIG 6532 SB	$625	FCBIG 6536 SB	$700	FCBIG 6542 SB	$765	FCBIG 6548 SB	$825	FCBIG 6560 SB	$995
FCBIG 6524 BK	$500	FCBIG 6532 BK	$625	FCBIG 6536 BK	$700	FCBIG 6542 BK	$765	FCBIG 6548 BK	$825	FCBIG 6560 BK	$995
(26" L x 4 1/2" W x 1 1/16" H) 7 lbs		(34" L x 4 1/2" W x 1 1/16" H) 7 lbs		(38" L x 4 1/2" W x 1 1/16" H) 8 lbs		(44" L x 4 1/2" W x 1 1/16" H) 8 lbs		(50" L x 4 1/2" W x 1 1/16" H) 10 lbs		(62" L x 4 1/2" W x 1 1/16" H) 12 lbs	

*See page 169 for more information on flow rates. • See page 123-124 for individual components. • See page 196-197 for shipping information.

NEW **FCBSG 65**

Solid

Complete Kit Includes:

- BA 65 - Stainless Steel Grate
- FCB 65 - Stainless Steel Channel (Includes TNAS - Threaded Nipple)
- HS 2 - Hair Strainer
- AKEY - Lift-Out Key

24" Model	List	32" Model	List	36" Model	List	42" Model	List	48" Model	List	60" Model	List
FCBSG 6524 SS	$865	FCBSG 6532 SS	$970	FCBSG 6536 SS	$1015	FCBSG 6542 SS	$1040	FCBSG 6548 SS	$1065	FCBSG 6560 SS	$1315
FCBSG 6524 PS	$980	FCBSG 6532 PS	$1095	FCBSG 6536 PS	$1150	FCBSG 6542 PS	$1185	FCBSG 6548 PS	$1220	FCBSG 6560 PS	$1465
FCBSG 6524 ORB	$980	FCBSG 6532 ORB	$1095	FCBSG 6536 ORB	$1150	FCBSG 6542 ORB	$1185	FCBSG 6548 ORB	$1220	FCBSG 6560 ORB	$1465
FCBSG 6524 SB	$980	FCBSG 6532 SB	$1095	FCBSG 6536 SB	$1150	FCBSG 6542 SB	$1185	FCBSG 6548 SB	$1220	FCBSG 6560 SB	$1465
FCBSG 6524 BK	$980	FCBSG 6532 BK	$1095	FCBSG 6536 BK	$1150	FCBSG 6542 BK	$1185	FCBSG 6548 BK	$1220	FCBSG 6560 BK	$1465
(26" L x 4 1/2" W x 1 3/16" H) 7 lbs		(34" L x 4 1/2" W x 1 3/16" H) 7 lbs		(38" L x 4 1/2" W x 1 3/16" H) 8 lbs		(44" L x 4 1/2" W x 1 3/16" H) 8 lbs		(50" L x 4 1/2" W x 1 3/16" H) 10 lbs		(62" L x 4 1/2" W x 1 3/16" H) 12 lbs	

*See page 169 for more information on flow rates. • See page 123-124 for individual components. • See page 197 for shipping information.

FCB Series

Fixed Flange for Double Waterproofing

T	L/F
TRADITIONAL WATERPROOFING	LIQUID/FABRIC WATERPROOFING

Pitched channel with a set length and center outlet location. 2" threaded connection. Standard kit sizes or custom fabrication (see page 109) are available.

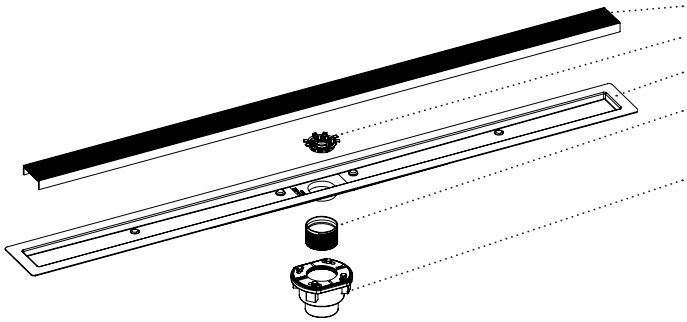

Finishes	
SS	Satin Stainless
PS	Polished Stainless
ORB	Oil Rubbed Bronze
SB	Satin Bronze
BK	Matte Black
Custom finishes available	

NEW **FCBTIF 65**

Tile Insert

Complete Kit Includes:

- LA 65 - Tile Insert Frame
- FCB 65 - Stainless Steel Channel (Includes TNAS - Threaded Nipple)
- HS 2 - Hair Strainer
- AKEY - Lift-Out Key

24" Model	List	32" Model	List	36" Model	List	42" Model	List	48" Model	List	60" Model	List
FCBTIF 6524 SS	$555	**FCBTIF 6532 SS**	$720	**FCBTIF 6536 SS**	$805	**FCBTIF 6542 SS**	$845	**FCBTIF 6548 SS**	$940	**FCBTIF 6560 SS**	$1145
FCBTIF 6524 PS	$570	**FCBTIF 6532 PS**	$735	**FCBTIF 6536 PS**	$825	**FCBTIF 6542 PS**	$865	**FCBTIF 6548 PS**	$960	**FCBTIF 6560 PS**	$1170
FCBTIF 6524 ORB	$570	**FCBTIF 6532 ORB**	$735	**FCBTIF 6536 ORB**	$825	**FCBTIF 6542 ORB**	$865	**FCBTIF 6548 ORB**	$960	**FCBTIF 6560 ORB**	$1170
FCBTIF 6524 SB	$570	**FCBTIF 6532 SB**	$735	**FCBTIF 6536 SB**	$825	**FCBTIF 6542 SB**	$865	**FCBTIF 6548 SB**	$960	**FCBTIF 6560 SB**	$1170
FCBTIF 6524 BK	$570	**FCBTIF 6532 BK**	$735	**FCBTIF 6536 BK**	$825	**FCBTIF 6542 BK**	$865	**FCBTIF 6548 BK**	$960	**FCBTIF 6560 BK**	$1170
(26" L x 4 ½" W x 1 3/16" H) 7 lbs		(34" L x 4 ½" W x 1 3/16" H) 7 lbs		(38" L x 4 ½" W x 1 3/16" H) 8 lbs		(44" L x 4 ½" W x 1 3/16" H) 8 lbs		(50" L x 4 ½" W x 1 3/16" H) 10 lbs		(62" L x 4 ½" W x 1 3/16" H) 12 lbs	

*See page 169 for more information on flow rates. • See page 123-124 for individual components. • See page 198 for shipping information.

Tile Insert Frame - tile not included

T
TRADITIONAL WATERPROOFING

L/F
LIQUID/FABRIC WATERPROOFING

FCB Series

Fixed Flange for Double Waterproofing

Specifications		
	FCBTIF 65	**FCBAS 65**
Grate Material:	16 ga. 304L Stainless Steel	316L Stainless Steel Wedge Wire
Channel Material:	16 ga. 304L Stainless Steel	16 ga. 304L Stainless Steel
Finished Width:	2 1/2"	2 1/2"
Minimum Height:	1 7/16"	1 5/16"
Flow Rate:	9 GPM	9 GPM

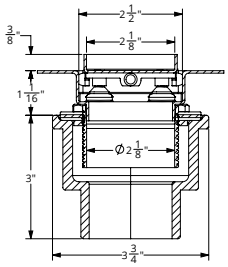

FCBTIF 65

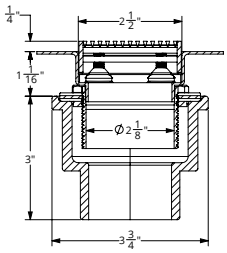

FCBAS 65

NEW **FCBAS 65**

Wedge Wire

Complete Kit Includes:

- WA 65 - Stainless Steel Grate
- FCB 65 - Stainless Steel Channel (Includes TNAS - Threaded Nipple)
- HS 2 - Hair Strainer
- AKEY - Lift-Out Key

24" Model	List	32" Model	List	36" Model	List	42" Model	List	48" Model	List	60" Model	List
FCBAS 6524 SS	$730	**FCBAS 6532 SS**	$1005	**FCBAS 6536 SS**	$1045	**FCBAS 6542 SS**	$1155	**FCBAS 6548 SS**	$1245	**FCBAS 6560 SS**	$1470
FCBAS 6524 PS	$885	**FCBAS 6532 PS**	$1165	**FCBAS 6536 PS**	$1205	**FCBAS 6542 PS**	$1310	**FCBAS 6548 PS**	$1405	**FCBAS 6560 PS**	$1620
FCBAS 6524 ORB	$885	**FCBAS 6532 ORB**	$1165	**FCBAS 6536 ORB**	$1205	**FCBAS 6542 ORB**	$1310	**FCBAS 6548 ORB**	$1405	**FCBAS 6560 ORB**	$1620
FCBAS 6524 SB	$885	**FCBAS 6532 SB**	$1165	**FCBAS 6536 SB**	$1205	**FCBAS 6542 SB**	$1310	**FCBAS 6548 SB**	$1405	**FCBAS 6560 SB**	$1620
FCBAS 6524 BK	$885	**FCBAS 6532 BK**	$1165	**FCBAS 6536 BK**	$1205	**FCBAS 6542 BK**	$1310	**FCBAS 6548 BK**	$1405	**FCBAS 6560 BK**	$1620
(26" L x 4 1/2" W x 1 1/16" H) 7 lbs		(34" L x 4 1/2" W x 1 1/16" H) 7 lbs		(38" L x 4 1/2" W x 1 1/16" H) 8 lbs		(44" L x 4 1/2" W x 1 1/16" H) 8 lbs		(50" L x 4 1/2" W x 1 1/16" H) 10 lbs		(62" L x 4 1/2" W x 1 1/16" H) 12 lbs	

*See page 169 for more information on flow rates. • See page 123-124 for individual components. • See page 196 for shipping information.

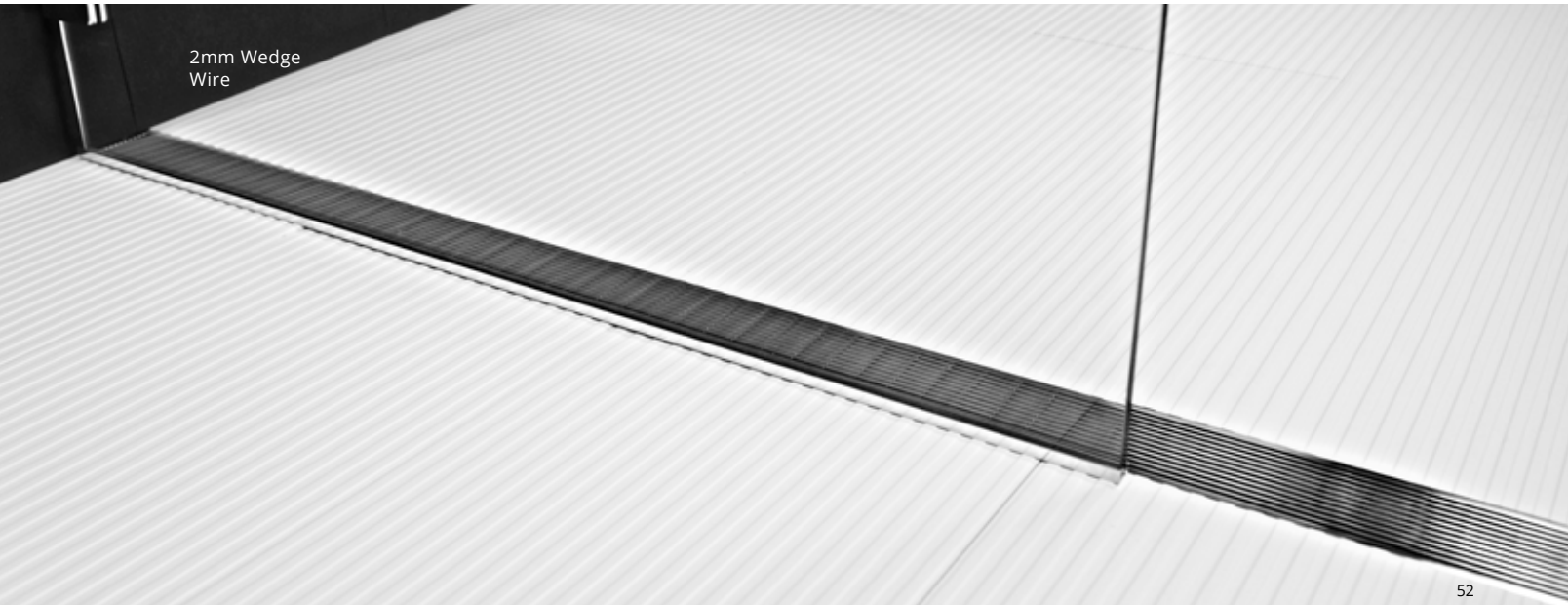

FCB Series

Fixed Flange for Double Waterproofing

T	L/F
TRADITIONAL WATERPROOFING	LIQUID/FABRIC WATERPROOFING

Pitched channel with a set length and center outlet location. 2" threaded connection. Standard kit sizes or custom fabrication (see page 109) are available.

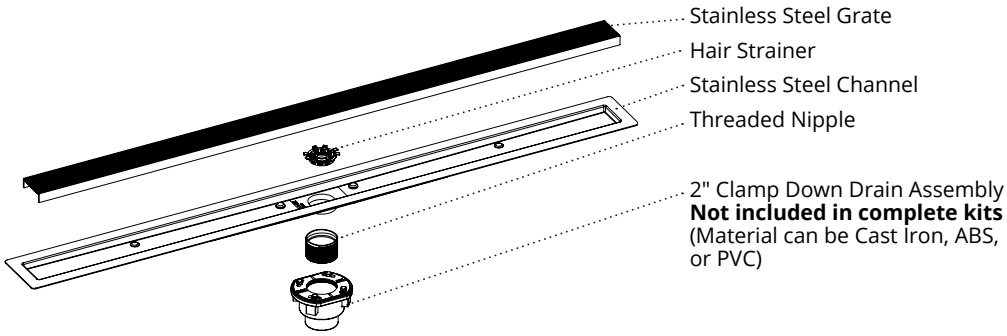

Finishes	
SS	Satin Stainless
PS	Polished Stainless
ORB	Oil Rubbed Bronze
SB	Satin Bronze
BK	Matte Black
Custom finishes available	

NEW **FCBAS 25**

Wedge Wire

Complete Kit Includes:

- SA 25 - Stainless Steel Grate
- FCB 65 - Stainless Steel Channel (Includes TNAS - Threaded Nipple)
- CI 25 - Channel Insert
- AKEY - Lift-Out Key

32" Model	List	36" Model	List	42" Model	List	48" Model	List	60" Model	List
FCBAS 2532 SS	$940	**FCBAS 2536 SS**	$1040	**FCBAS 2542 SS**	$1240	**FCBAS 2548 SS**	$1290	**FCBAS 2560 SS**	$1440
FCBAS 2532 PS	$1085	**FCBAS 2536 PS**	$1170	**FCBAS 2542 PS**	$1340	**FCBAS 2548 PS**	$1390	**FCBAS 2560 PS**	$1590
FCBAS 2532 ORB	$1085	**FCBAS 2536 ORB**	$1170	**FCBAS 2542 ORB**	$1340	**FCBAS 2548 ORB**	$1390	**FCBAS 2560 ORB**	$1590
FCBAS 2532 SB	$1085	**FCBAS 2536 SB**	$1170	**FCBAS 2542 SB**	$1340	**FCBAS 2548 SB**	$1390	**FCBAS 2560 SB**	$1590
FCBAS 2532 BK	$1085	**FCBAS 2536 BK**	$1170	**FCBAS 2542 BK**	$1340	**FCBAS 2548 BK**	$1390	**FCBAS 2560 BK**	$1590
(34" L x 4 ½" W x 1 3/16" H) 7 lbs		(38" L x 4 ½" W x 1 3/16" H) 8 lbs		(44" L x 4 ½" W x 1 3/16" H) 8 lbs		(50" L x 4 ½" W x 1 3/16" H) 10 lbs		(62" L x 4 ½" W x 1 3/16" H) 12 lbs	

*See page 169 for more information on flow rates. • See page 123-124 for individual components. • See page 195-196 for shipping information.

T
TRADITIONAL WATERPROOFING

L/F
LIQUID/FABRIC WATERPROOFING

FCB Series

Fixed Flange for Double Waterproofing

Specifications		
	FCBAS 25	**FCBST**
Grate Material:	316L Stainless Steel Wedge Wire	18 ga. 304L Stainless Steel
Channel Material:	16 ga. 304L Stainless Steel	16 ga. 304L Stainless Steel
Finished Width:	2 1/2"	5/8"
Minimum Height:	1 5/16"	1 7/16"
Flow Rate:	9 GPM	9 GPM

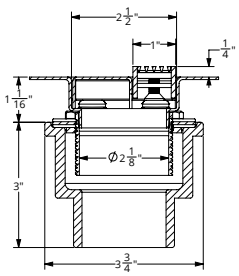

FCBAS 25

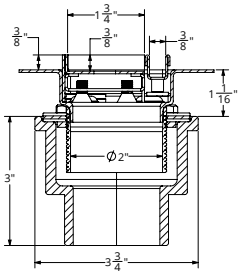

FCBST

NEW **FCBST**

Slot

Complete Kit Includes:

- CBST 65 - Stainless Steel Channel (Includes Tile Insert Cleanout and Threaded Nipple)
- SLOT - Slot insert
- HS 2 - Hair Strainer
- WKEY - Lift-Out Key

24" Model	List	32" Model	List	36" Model	List	42" Model	List	48" Model	List	60" Model	List
FCBST 24 SS	$570	**FCBST 32 SS**	$695	**FCBST 36 SS**	$760	**FCBST 42 SS**	$855	**FCBST 48 SS**	$955	**FCBST 60 SS**	$1115
FCBST 24 PS	$600	**FCBST 32 PS**	$730	**FCBST 36 PS**	$810	**FCBST 42 PS**	$910	**FCBST 48 PS**	$1015	**FCBST 60 PS**	$1190
FCBST 24 ORB	$600	**FCBST 32 ORB**	$730	**FCBST 36 ORB**	$810	**FCBST 42 ORB**	$910	**FCBST 48 ORB**	$1015	**FCBST 60 ORB**	$1190
FCBST 24 SB	$600	**FCBST 32 SB**	$730	**FCBST 36 SB**	$810	**FCBST 42 SB**	$910	**FCBST 48 SB**	$1015	**FCBST 60 SB**	$1190
FCBST 24 BK	$600	**FCBST 32 BK**	$730	**FCBST 36 BK**	$810	**FCBST 42 BK**	$910	**FCBST 48 BK**	$1015	**FCBST 60 BK**	$1190
(26" L x 4 1/2" W x 1 1/16" H) 7 lbs		(34" L x 4 1/2" W x 1 1/16" H) 7 lbs		(38" L x 4 1/2" W x 1 1/16" H) 8 lbs		(44" L x 4 1/2" W x 1 1/16" H) 8 lbs		(50" L x 4 1/2" W x 1 1/16" H) 10 lbs		(62" L x 4 1/2" W x 1 1/16" H) 12 lbs	

*See page 169 for more information on flow rates. • See page 126 for individual components. • See page 197-198 for shipping information.

Slot Drain

FT Series

Fixed Flange with Side Outlet

L/F
LIQUID/FABRIC WATERPROOFING

Pitched channel with a set length and center side outlet location. 2" no hub connection. Standard kit sizes or custom fabrication (see page 111) are available.

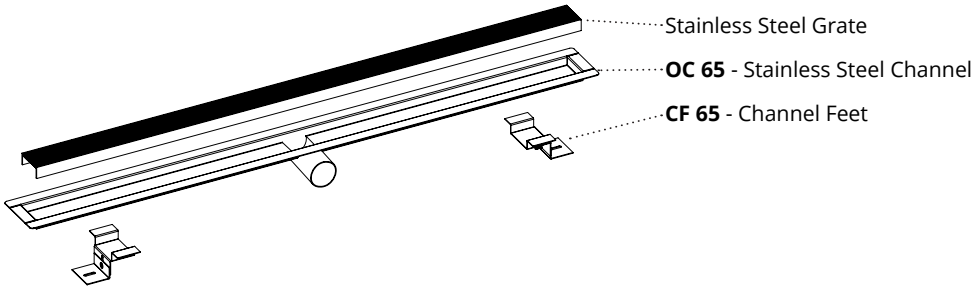

Finishes	
SS	Satin Stainless
PS	Polished Stainless
ORB	Oil Rubbed Bronze
SB	Satin Bronze
BK	Matte Black
Custom finishes available	

FTED 65

Offset Oval

Complete Kit Includes:

- EA 65 - Stainless Steel Grate
- OC 65 - Stainless Steel Channel
- CF 65 - Channel Feet
- AKEY - Lift-Out Key

24" Model	List	32" Model	List	36" Model	List	42" Model	List	48" Model	List	60" Model	List
FTED 6524 SS	$510	FTED 6532 SS	$635	FTED 6536 SS	$720	FTED 6542 SS	$810	FTED 6548 SS	$865	FTED 6560 SS	$1015
FTED 6524 PS	$575	FTED 6532 PS	$740	FTED 6536 PS	$790	FTED 6542 PS	$885	FTED 6548 PS	$945	FTED 6560 PS	$1115
FTED 6524 ORB	$575	FTED 6532 ORB	$740	FTED 6536 ORB	$790	FTED 6542 ORB	$885	FTED 6548 ORB	$945	FTED 6560 ORB	$1115
FTED 6524 SB	$575	FTED 6532 SB	$740	FTED 6536 SB	$790	FTED 6542 SB	$885	FTED 6548 SB	$945	FTED 6560 SB	$1115
FTED 6524 BK	$575	FTED 6532 BK	$740	FTED 6536 BK	$790	FTED 6542 BK	$885	FTED 6548 BK	$945	FTED 6560 BK	$1115
(26" L x 4 ½" W x 1 13/16" H) 7 lbs		(34" L x 4 ½" W x 1 13/16" H) 7 lbs		(38" L x 4 ½" W x 1 13/16" H) 8 lbs		(44" L x 4 ½" W x 1 13/16" H) 8 lbs		(50" L x 4 ½" W x 1 13/16" H) 10 lbs		(62" L x 4 ½" W x 1 13/16" H) 12 lbs	

*See page 169 for more information on flow rates. • See page 123-124 for individual components. • See page 204-205 for shipping information.

FTMN 65

Marc Newson

Complete Kit Includes:

- MA 65 - Stainless Steel Grate
- OC 65 - Stainless Steel Channel
- CF 65 - Channel Feet
- DKEY - Lift-Out Key

32" Model	List	36" Model	List	42" Model	List	48" Model	List	60" Model	List
FTMN 6532 SS	$760	FTMN 6536 SS	$800	FTMN 6542 SS	$895	FTMN 6548 SS	$960	FTMN 6560 SS	$1230
FTMN 6532 PS	$910	FTMN 6536 PS	$950	FTMN 6542 PS	$1045	FTMN 6548 PS	$1140	FTMN 6560 PS	$1380
FTMN 6532 ORB	$910	FTMN 6536 ORB	$950	FTMN 6542 ORB	$1045	FTMN 6548 ORB	$1140	FTMN 6560 ORB	$1380
FTMN 6532 SB	$910	FTMN 6536 SB	$950	FTMN 6542 SB	$1045	FTMN 6548 SB	$1140	FTMN 6560 SB	$1380
FTMN 6532 BK	$910	FTMN 6536 BK	$950	FTMN 6542 BK	$1045	FTMN 6548 BK	$1140	FTMN 6560 BK	$1380
(34" L x 4 ½" W x 1 13/16" H) 7 lbs		(38" L x 4 ½" W x 1 13/16" H) 8 lbs		(44" L x 4 ½" W x 1 13/16" H) 8 lbs		(50" L x 4 ½" W x 1 13/16" H) 10 lbs		(62" L x 4 ½" W x 1 13/16" H) 12 lbs	

*See page 169 for more information on flow rates. • See page 123-124 for individual components. • See page 205 for shipping information.

L/F
LIQUID/FABRIC WATERPROOFING

FT Series

Fixed Flanged with Side Outlet

Specifications		
	FTED/FTMN/FTIG 65	**FTSG 65**
Grate Material:	16 ga. 304L Stainless Steel	7 ga. 304L Stainless Steel
Channel Material:	16 ga. 304L Stainless Steel	304L Stainless Steel
Finished Width:	2 1/2"	2 1/2"
Minimum Height:	13/16"	1"
Flow Rate:	9 GPM	9 GPM

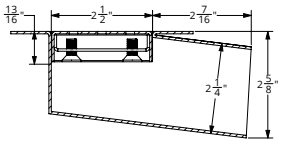

FTED/ FTMN/ FTIG 65

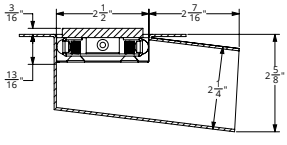

FTSG 65

FTIG 65

Slotted

Complete Kit Includes:

- UA 65 - Stainless Steel Grate
- OC 65 - Stainless Steel Channel
- CF 65 - Channel Feet
- AKEY - Lift-Out Key

24" Model	List	32" Model	List	36" Model	List	42" Model	List	48" Model	List	60" Model	List
FTIG 6524 SS	$510	**FTIG 6532 SS**	$635	**FTIG 6536 SS**	$720	**FTIG 6542 SS**	$810	**FTIG 6548 SS**	$865	**FTIG 6560 SS**	$1015
FTIG 6524 PS	$575	**FTIG 6532 PS**	$740	**FTIG 6536 PS**	$790	**FTIG 6542 PS**	$885	**FTIG 6548 PS**	$945	**FTIG 6560 PS**	$1115
FTIG 6524 ORB	$575	**FTIG 6532 ORB**	$740	**FTIG 6536 ORB**	$790	**FTIG 6542 ORB**	$885	**FTIG 6548 ORB**	$945	**FTIG 6560 ORB**	$1115
FTIG 6524 SB	$575	**FTIG 6532 SB**	$740	**FTIG 6536 SB**	$790	**FTIG 6542 SB**	$885	**FTIG 6548 SB**	$945	**FTIG 6560 SB**	$1115
FTIG 6524 BK	$575	**FTIG 6532 BK**	$740	**FTIG 6536 BK**	$790	**FTIG 6542 BK**	$885	**FTIG 6548 BK**	$945	**FTIG 6560 BK**	$1115
(26" L x 4 ½" W x 1 13/16" H) 7 lbs		(34" L x 4 ½" W x 1 13/16" H) 7 lbs		(38" L x 4 ½" W x 1 13/16" H) 8 lbs		(44" L x 4 ½" W x 1 13/16" H) 8 lbs		(50" L x 4 ½" W x 1 13/16" H) 10 lbs		(62" L x 4 ½" W x 1 13/16" H) 12 lbs	

*See page 169 for more information on flow rates. • See page 123-124 for individual components. • See page 205 for shipping information.

FTSG 65

Solid

Complete Kit Includes:

- BA 65 - Stainless Steel Grate
- OC 65 - Stainless Steel Channel
- CF 65 - Channel Feet
- AKEY - Lift-Out Key

24" Model	List	32" Model	List	36" Model	List	42" Model	List	48" Model	List	60" Model	List
FTSG 6524 SS	$890	**FTSG 6532 SS**	$1085	**FTSG 6536 SS**	$1105	**FTSG 6542 SS**	$1160	**FTSG 6548 SS**	$1185	**FTSG 6560 SS**	$1435
FTSG 6524 PS	$1035	**FTSG 6532 PS**	$1185	**FTSG 6536 PS**	$1210	**FTSG 6542 PS**	$1305	**FTSG 6548 PS**	$1340	**FTSG 6560 PS**	$1585
FTSG 6524 ORB	$1035	**FTSG 6532 ORB**	$1185	**FTSG 6536 ORB**	$1210	**FTSG 6542 ORB**	$1305	**FTSG 6548 ORB**	$1340	**FTSG 6560 ORB**	$1585
FTSG 6524 SB	$1035	**FTSG 6532 SB**	$1185	**FTSG 6536 SB**	$1210	**FTSG 6542 SB**	$1305	**FTSG 6548 SB**	$1340	**FTSG 6560 SB**	$1585
FTSG 6524 BK	$1035	**FTSG 6532 BK**	$1185	**FTSG 6536 BK**	$1210	**FTSG 6542 BK**	$1305	**FTSG 6548 BK**	$1340	**FTSG 6560 BK**	$1585
(26" L x 4 ½" W x 1" H) 7 lbs		(34" L x 4 ½" W x 1" H) 7 lbs		(38" L x 4 ½" W x 1" H) 8 lbs		(44" L x 4 ½" W x 1" H) 8 lbs		(50" L x 4 ½" W x 1" H) 10 lbs		(62" L x 4 ½" W x 1" H) 12 lbs	

*See page 169 for more information on flow rates. • See page 123-124 for individual components. • See page 205-206 for shipping information.

FT Series

Fixed Flange with Side Outlet

L/F
LIQUID/FABRIC WATERPROOFING

Pitched channel with a set length and center side outlet location. 2" no hub connection. Standard kit sizes or custom fabrication (see page 111) are available.

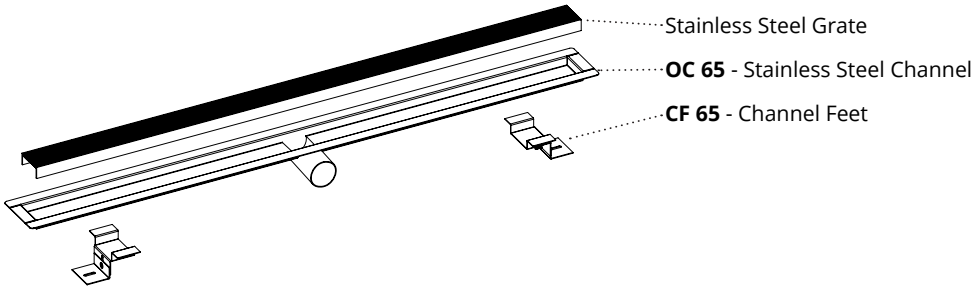

Finishes	
SS	Satin Stainless
PS	Polished Stainless
ORB	Oil Rubbed Bronze
SB	Satin Bronze
BK	Matte Black
Custom finishes available	

FTTIF 65

Tile Insert

Tile not included
Open area for material (Depth 3/8")

Complete Kit Includes:

- LA 65 - Tile Insert Frame
- OC 65 - Stainless Steel Channel
- CF 65 - Channel Feet
- AKEY - Lift-Out Key

24" Model	List	32" Model	List	36" Model	List	42" Model	List	48" Model	List	60" Model	List
FTTIF 6524 SS	$630	**FTTIF 6532 SS**	$835	**FTTIF 6536 SS**	$895	**FTTIF 6542 SS**	$965	**FTTIF 6548 SS**	$1060	**FTTIF 6560 SS**	$1265
FTTIF 6524 PS	$645	**FTTIF 6532 PS**	$850	**FTTIF 6536 PS**	$915	**FTTIF 6542 PS**	$985	**FTTIF 6548 PS**	$1080	**FTTIF 6560 PS**	$1290
FTTIF 6524 ORB	$645	**FTTIF 6532 ORB**	$850	**FTTIF 6536 ORB**	$915	**FTTIF 6542 ORB**	$985	**FTTIF 6548 ORB**	$1080	**FTTIF 6560 ORB**	$1290
FTTIF 6524 SB	$645	**FTTIF 6532 SB**	$850	**FTTIF 6536 SB**	$915	**FTTIF 6542 SB**	$985	**FTTIF 6548 SB**	$1080	**FTTIF 6560 SB**	$1290
FTTIF 6524 BK	$645	**FTTIF 6532 BK**	$850	**FTTIF 6536 BK**	$915	**FTTIF 6542 BK**	$985	**FTTIF 6548 BK**	$1080	**FTTIF 6560 BK**	$1290
(26" L x 4 ½" W x 1" H) 7 lbs		(34" L x 4 ½" W x 1" H) 7 lbs		(38" L x 4 ½" W x 1" H) 8 lbs		(44" L x 4 ½" W x 1" H) 8 lbs		(50" L x 4 ½" W x 1" H) 10 lbs		(62" L x 4 ½" W x 1" H) 12 lbs	

*See page 169 for more information on flow rates. • See page 123-124 for individual components. • See page 206 for shipping information.

Tile Insert Frame - tile not included

L/F
LIQUID/FABRIC WATERPROOFING

FT Series

Fixed Flanged with Side Outlet

Specifications		
	FTTIF 65	**FTAS 65**
Grate Material:	16 ga. 304L Stainless Steel	316L Stainless Steel Wedge Wire
Channel Material:	16 ga. 304L Stainless Steel	304L Stainless Steel
Finished Width:	2 1/2"	2 1/2"
Minimum Height:	1"	13/16"
Flow Rate:	9 GPM	9 GPM

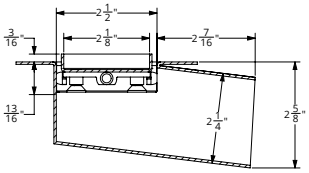

FTTIF 65

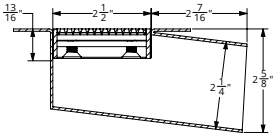

FTAS 65

FTAS 65

Wedge Wire

Complete Kit Includes:

- UA 65 - Stainless Steel Grate
- OC 65 - Stainless Steel Channel
- CF 65 - Channel Feet
- AKEY - Lift-Out Key

24" Model	List	32" Model	List	36" Model	List	42" Model	List	48" Model	List	60" Model	List
FTAS 6524 SS	$820	**FTAS 6532 SS**	$1075	**FTAS 6536 SS**	$1090	**FTAS 6542 SS**	$1230	**FTAS 6548 SS**	$1325	**FTAS 6560 SS**	$1545
FTAS 6524 PS	$980	**FTAS 6532 PS**	$1240	**FTAS 6536 PS**	$1255	**FTAS 6542 PS**	$1395	**FTAS 6548 PS**	$1490	**FTAS 6560 PS**	$1710
FTAS 6524 ORB	$980	**FTAS 6532 ORB**	$1240	**FTAS 6536 ORB**	$1255	**FTAS 6542 ORB**	$1395	**FTAS 6548 ORB**	$1490	**FTAS 6560 ORB**	$1710
FTAS 6524 SB	$980	**FTAS 6532 SB**	$1240	**FTAS 6536 SB**	$1255	**FTAS 6542 SB**	$1395	**FTAS 6548 SB**	$1490	**FTAS 6560 SB**	$1710
FTAS 6524 BK	$980	**FTAS 6532 BK**	$1240	**FTAS 6536 BK**	$1255	**FTAS 6542 BK**	$1395	**FTAS 6548 BK**	$1490	**FTAS 6560 BK**	$1710
(26" L x 4 ½" W x 1 13/16" H) 7 lbs		(34" L x 4 ½" W x 1 13/16" H) 7 lbs		(38" L x 4 ½" W x 1 13/16" H) 8 lbs		(44" L x 4 ½" W x 1 13/16" H) 8 lbs		(50" L x 4 ½" W x 1 13/16" H) 10 lbs		(62" L x 4 ½" W x 1 13/16" H) 12 lbs	

*See page 169 for more information on flow rates. • See page 123-124 for individual components. • See page 204 for shipping information.

NEW Universal Infinity Drain™

Universal Infinity Drain™ – Complete kit includes pitched channel, clamping collar, and choice of stainless steel tile insert frame or squares pattern grate.

Pitched Channel
Available in PVC, ABS, or Hot Mop

Clamping collar

Tile Insert Frame

or

Squares Pattern Grate

Compatible with every type of waterproofing.

From Vinyl to Liquid/Fabric.

PVC channel with clamping collar - Universal Infinity Drain™ Series

USQ Squares pattern grate - Universal Infinity Drain™ Series

NEW

U-Series

Universal Infinity Drain™ - Squares

T
TRADITIONAL WATERPROOFING

L/F
LIQUID/FABRIC WATERPROOFING

Pitched channel with a set length and center outlet location. 2" slip fit solvent weld connection.

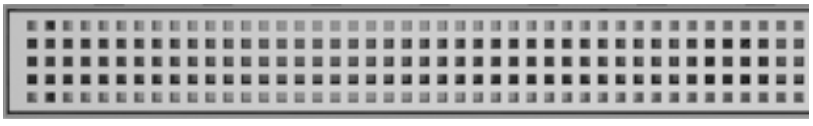

Specifications	
Grate Material:	18 Ga 304L Stainless Steel
Clamping Collar Material:	18 Ga 304L Stainless Steel
Flow Rate:	9 GPM

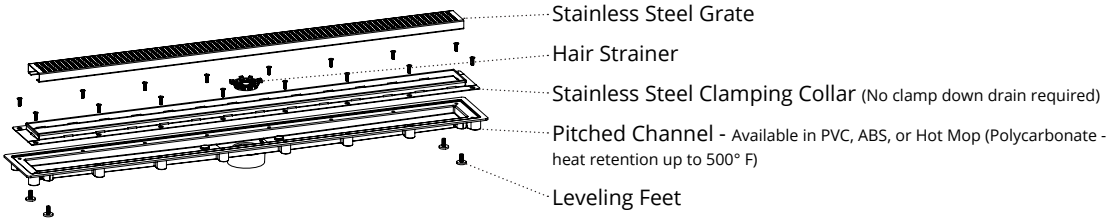

Description	Channel	Model	Finish	Lbs	List
24" Complete Kit Includes: (27" L x 5 1/2" W x 1" H) 1 - QA 6524 Grate 1 - UC 24 Channel 2 - Clamping Collars - CCL 24 (½") & CCH 24 (1") 1 - HS 2 Hair Strainer 1 - AKEY Lift Out Key	ABS Channel	**USQ-A 24 SS** **USQ-A 24 PS**	Satin Stainless Polished Stainless		$200 $225
	Hot Mop Channel	**USQ-H 24 SS** **USQ-H 24 PS**	Satin Stainless Polished Stainless		$215 $240
	PVC Channel	**USQ-P 24 SS** **USQ-P 24 PS**	Satin Stainless Polished Stainless		$200 $225
30" Complete Kit Includes: (33" L x 5 1/2" W x 1" H) 1 - QA 6530 Grate 1 - UC 30 Channel 2 - Clamping Collars - CCL 30 (½") & CCH 30 (1") 1 - HS 2 Hair Strainer 1 - AKEY Lift Out Key	ABS Channel	**USQ-A 30 SS** **USQ-A 30 PS**	Satin Stainless Polished Stainless		$225 $250
	Hot Mop Channel	**USQ-H 30 SS** **USQ-H 30 PS**	Satin Stainless Polished Stainless		$240 $265
	PVC Channel	**USQ-P 30 SS** **USQ-P 30 PS**	Satin Stainless Polished Stainless		$225 $250
32" Complete Kit Includes: (35" L x 5 1/2" W x 1" H)) 1 - QA 6532 Grate 1 - UC 32 Channel 2 - Clamping Collars - CCL 32 (½") & CCH 32 (1") 1 - HS 2 Hair Strainer 1 - AKEY Lift Out Key	ABS Channel	**USQ-A 32 SS** **USQ-A 32 PS**	Satin Stainless Polished Stainless		$235 $260
	Hot Mop Channel	**USQ-H 32 SS** **USQ-H 32 PS**	Satin Stainless Polished Stainless		$250 $275
	PVC Channel	**USQ-P 32 SS** **USQ-P 32 PS**	Satin Stainless Polished Stainless		$235 $260
36" Complete Kit Includes: (39" L x 5 1/2" W x 1" H) 1 - QA 6536 Grate 1 - UC 36 Channel 2 - Clamping Collars - CCL 36 (½") & CCH 36 (1") 1 - HS 2 Hair Strainer 1 - AKEY Lift Out Key	ABS Channel	**USQ-A 36 SS** **USQ-A 36 PS**	Satin Stainless Polished Stainless		$250 $275
	Hot Mop Channel	**USQ-H 36 SS** **USQ-H 36 PS**	Satin Stainless Polished Stainless		$265 $290
	PVC Channel	**USQ-P 36 SS** **USQ-P 36 PS**	Satin Stainless Polished Stainless		$250 $275
42" Complete Kit Includes: (45" L x 5 1/2" W x 1" H) 1 - QA 6542 Grate 1 - UC 42 Channel 2 - Clamping Collars - CCL 42 (½") & CCH 42 (1") 1 - HS 2 Hair Strainer 1 - AKEY Lift Out Key	ABS Channel	**USQ-A 42 SS** **USQ-A 42 PS**	Satin Stainless Polished Stainless		$275 $300
	Hot Mop Channel	**USQ-H 42 SS** **USQ-H 42 PS**	Satin Stainless Polished Stainless		$290 $315
	PVC Channel	**USQ-P 42 SS** **USQ-P 42 PS**	Satin Stainless Polished Stainless		$275 $300
48" Complete Kit Includes: (51" L x 5 1/2" W x 1" H) 1 - QA 6548 Grate 1 - UC 48 Channel 2 - Clamping Collars - CCL 48 (½") & CCH 48 (1") 1 - HS 2 Hair Strainer 1 - AKEY Lift Out Key	ABS Channel	**USQ-A 48 SS** **USQ-A 48 PS**	Satin Stainless Polished Stainless		$300 $325
	Hot Mop Channel	**USQ-H 48 SS** **USQ-H 48 PS**	Satin Stainless Polished Stainless		$315 $340
	PVC Channel	**USQ-P 48 SS** **USQ-P 48 PS**	Satin Stainless Polished Stainless		$300 $325
54" Complete Kit Includes: (57" L x 5 1/2" W x 1" H) 1 - QA 6554 Grate 1 - UC 54 Channel 2 - Clamping Collars - CCL 54 (½") & CCH 54 (1") 1 - HS 2 Hair Strainer 1 - AKEY Lift Out Key	ABS Channel	**USQ-A 54 SS** **USQ-A 54 PS**	Satin Stainless Polished Stainless		$325 $350
	Hot Mop Channel	**USQ-H 54 SS** **USQ-H 54 PS**	Satin Stainless Polished Stainless		$340 $365
	PVC Channel	**USQ-P 54 SS** **USQ-P 54 PS**	Satin Stainless Polished Stainless		$325 $350
60" Complete Kit Includes: (63" L x 5 1/2" W x 1" H) 1 - QA 6560 Grate 1 - UC 60 Channel 2 - Clamping Collars - CCL 60 (½") & CCH 60 (1") 1 - HS 2 Hair Strainer 1 - AKEY Lift Out Key	ABS Channel	**USQ-A 60 SS** **USQ-A 60 PS**	Satin Stainless Polished Stainless		$350 $375
	Hot Mop Channel	**USQ-H 60 SS** **USQ-H 60 PS**	Satin Stainless Polished Stainless		$365 $390
	PVC Channel	**USQ-P 60 SS** **USQ-P 60 PS**	Satin Stainless Polished Stainless		$350 $375

*See page 169 for more information on flow rates. • See page 133 for individual components. • See page 233 for shipping information.

T
TRADITIONAL WATERPROOFING

L/F
LIQUID/FABRIC WATERPROOFING

NEW

U-Series

Universal Infinity Drain™ - Tile Insert

Pitched channel with a set length and center outlet location. 2" slip fit solvent weld connection.

Specifications	
Tile Insert Frame Material:	16 Ga 304L Stainless Steel
Clamping Collar Material:	18 Ga 304L Stainless Steel
Flow Rate:	9 GPM

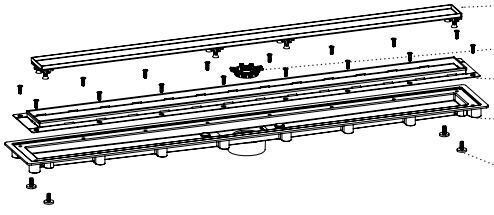

Description	Channel	Model	Finish	Lbs	List
24" Complete Kit Includes: (27" L x 5 1/2" W x 1" H) 1 - NA 6524 Tile Insert Frame 1 - UC 24 Channel 2 - Clamping Collars - CCL 24 (½") & CCH 24 (1") 1 - HS 2 Hair Strainer 1 - AKEY Lift Out Key	ABS Channel	**UTIF-A 24 SS**	Satin Stainless		$250
	Hot Mop Channel	**UTIF-H 24 SS**	Satin Stainless		$265
	PVC Channel	**UTIF-P 24 SS**	Satin Stainless		$250
30" Complete Kit Includes: (33" L x 5 1/2" W x 1" H) 1 - NA 6530 Tile Insert Frame 1 - UC 30 Channel 2 - Clamping Collars - CCL 30 (½") & CCH 30 (1") 1 - HS 2 Hair Strainer 1 - AKEY Lift Out Key	ABS Channel	**UTIF-A 30 SS**	Satin Stainless		$275
	Hot Mop Channel	**UTIF-H 30 SS**	Satin Stainless		$290
	PVC Channel	**UTIF-P 30 SS**	Satin Stainless		$275
32" Complete Kit Includes: (35" L x 5 1/2" W x 1" H)) 1 - NA 6532 Tile Insert Frame 1 - UC 32 Channel 2 - Clamping Collars - CCL 32 (½") & CCH 32 (1") 1 - HS 2 Hair Strainer 1 - AKEY Lift Out Key	ABS Channel	**UTIF-A 32 SS**	Satin Stainless		$285
	Hot Mop Channel	**UTIF-H 32 SS**	Satin Stainless		$300
	PVC Channel	**UTIF-P 32 SS**	Satin Stainless		$285
36" Complete Kit Includes: (39" L x 5 1/2" W x 1" H) 1 - NA 6536 Tile Insert Frame 1 - UC 36 Channel 2 - Clamping Collars - CCL 36 (½") & CCH 36 (1") 1 - HS 2 Hair Strainer 1 - AKEY Lift Out Key	ABS Channel	**UTIF-A 36 SS**	Satin Stainless		$300
	Hot Mop Channel	**UTIF-H 36 SS**	Satin Stainless		$315
	PVC Channel	**UTIF-P 36 SS**	Satin Stainless		$300
42" Complete Kit Includes: (45" L x 5 1/2" W x 1" H) 1 - NA 6542 Tile Insert Frame 1 - UC 42 Channel 2 - Clamping Collars - CCL 42 (½") & CCH 42 (1") 1 - HS 2 Hair Strainer 1 - AKEY Lift Out Key	ABS Channel	**UTIF-A 42 SS**	Satin Stainless		$325
	Hot Mop Channel	**UTIF-H 42 SS**	Satin Stainless		$340
	PVC Channel	**UTIF-P 42 SS**	Satin Stainless		$325
48" Complete Kit Includes: (51" L x 5 1/2" W x 1" H) 1 - NA 6548 Tile Insert Frame 1 - UC 48 Channel 2 - Clamping Collars - CCL 48 (½") & CCH 48 (1") 1 - HS 2 Hair Strainer 1 - AKEY Lift Out Key	ABS Channel	**UTIF-A 48 SS**	Satin Stainless		$350
	Hot Mop Channel	**UTIF-H 48 SS**	Satin Stainless		$365
	PVC Channel	**UTIF-P 48 SS**	Satin Stainless		$350
54" Complete Kit Includes: (57" L x 5 1/2" W x 1" H) 1 - NA 6554 Tile Insert Frame 1 - UC 54 Channel 2 - Clamping Collars - CCL 54 (½") & CCH 54 (1") 1 - HS 2 Hair Strainer 1 - AKEY Lift Out Key	ABS Channel	**UTIF-A 54 SS**	Satin Stainless		$375
	Hot Mop Channel	**UTIF-H 54 SS**	Satin Stainless		$390
	PVC Channel	**UTIF-P 54 SS**	Satin Stainless		$375
60" Complete Kit Includes: (63" L x 5 1/2" W x 1" H) 1 - NA 6560 Tile Insert Frame 1 - UC 60 Channel 2 - Clamping Collars - CCL 60 (½") & CCH 60 (1") 1 - HS 2 Hair Strainer 1 - AKEY Lift Out Key	ABS Channel	**UTIF-A 60 SS**	Satin Stainless		$400
	Hot Mop Channel	**UTIF-H 60 SS**	Satin Stainless		$415
	PVC Channel	**UTIF-P 60 SS**	Satin Stainless		$400

*See page 169 for more information on flow rates. • See page 133 for individual components. • See page 234 for shipping information.

The shower — it’s not just how it looks, it’s how it makes you feel.

Squares
Satin Stainless

Weave
Black

Center Drains

Let the structure not distract from the function. In the case of these drains that may be hard to do. Hand polished and designed to exacting standards, you may be compelled to add another shower.

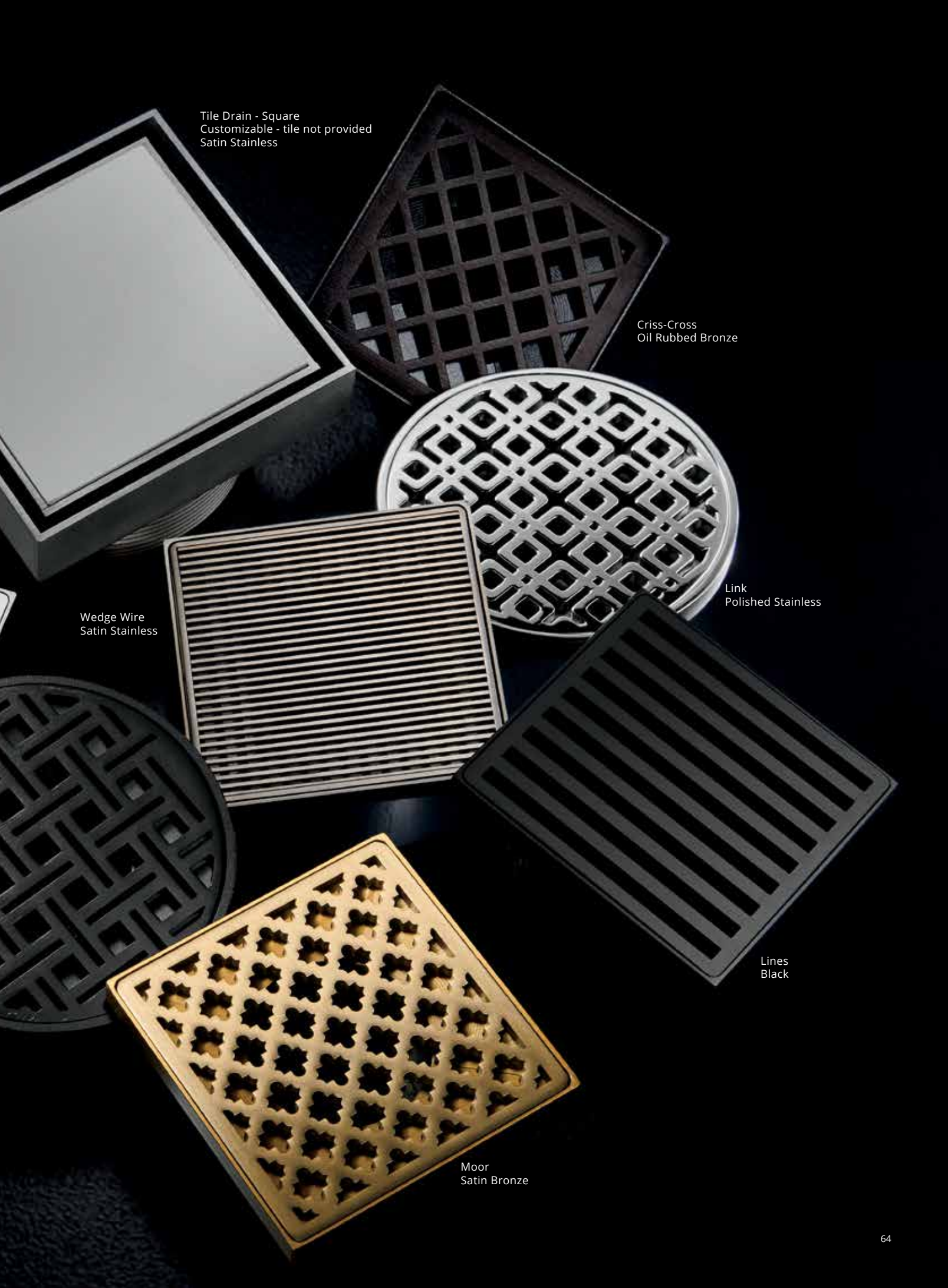
Tile Drain - Square
Customizable - tile not provided
Satin Stainless
Criss-Cross
Oil Rubbed Bronze
Link
Polished Stainless
Wedge Wire
Satin Stainless
Lines
Black
Moor
Satin Bronze

LTD 5 - Tile Drain

5"x5" Center Drain

Specifications	
Insert Material:	16 Ga. 304L Stainless Steel
Throat Material:	ABS
Flow Rate:	8 GPM

Description	Finish	Model	Lbs	List
5" x 5" LT5-2 Tile Drain Strainer with 2" Throat: Compatible with standard 2" floor drain: Jones Stephens, Oatey 151, EZ test, and Frank Pattern Instant Set.	Satin Stainless	**LT5-2-SS**	1	$95
	Polished Stainless	**LT5-2-PS**		$145
	Satin Bronze	**LT5-2-ORB**		$145
	Oil Rubbed Bronze	**LT5-2-SB**		$145
	Matte Black	**LT5-2-BK**		$145
		Case Qty 24		
		LT5-2 SS-C24		$2280
		LT5-2 PS-C24		$3480
		LT5-2 ORB-C24		$3480
		LT5-2 SB-C24		$3480
		LT5-2 BK-C24		$3480

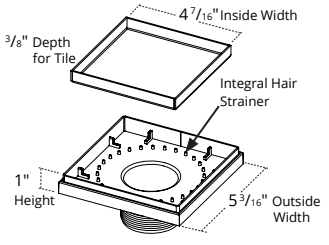

Description	Drain Body	Finish	Model	Lbs	List
T TRADITIONAL WATERPROOFING — **5" x 5" LTD 5 Kit with Drain Body 2" Outlet. Kit Includes:** 1 - LT5-2 Tile Drain Strainer; 1 - DKEY Lift-Out Key; 1 - CDI 22/CDIH 22/CDP 22/CDA 22 Drain Body	Cast Iron	Satin Stainless	**LTD5-2I SS**	5	$160
		Polished Stainless	**LTD5-2I PS**		$210
		Satin Bronze	**LTD5-2I ORB**		$210
		Oil Rubbed Bronze	**LTD5-2I SB**		$210
		Matte Black	**LTD5-2I BK**		$210
	Cast Iron (For Hot Mop)	Satin Stainless	**LTD5-2H SS**	5	$160
		Polished Stainless	**LTD5-2HPS**		$210
		Satin Bronze	**LTD5-2H ORB**		$210
		Oil Rubbed Bronze	**LTD5-2H SB**		$210
		Matte Black	**LTD5-2H BK**		$210
	ABS	Satin Stainless	**LTD5-2A SS**	2	$145
		Polished Stainless	**LTD5-2A PS**		$195
		Satin Bronze	**LTD5-2A ORB**		$195
		Oil Rubbed Bronze	**LTD5-2A SB**		$195
		Matte Black	**LTD5-2A BK**		$195
	PVC	Satin Stainless	**LTD5-2P SS**	2	$145
		Polished Stainless	**LTD5-2P PS**		$195
		Satin Bronze	**LTD5-2P ORB**		$195
		Oil Rubbed Bronze	**LTD5-2P SB**		$195
		Matte Black	**LTD5-2P BK**		$195

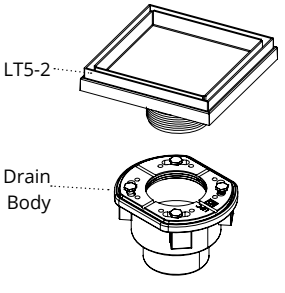

Description	Bonded Flange	Finish	Model	Lbs	List
L/F LIQUID/FABRIC WATERPROOFING — **5" x 5" LTD 5 Kit with Bonded Flange 2", 3", and 4" Outlet. Kit Includes:** 1 - LT5-2 Tile Drain Strainer; 1 - DKEY Lift-Out Key; 1 - BFP 22/ BFA 22/ BFS 22 Bonded Flange	PVC	Satin Stainless	**LTD5 BP SS**	2	$195
		Polished Stainless	**LTD5 BP PS**		$245
		Satin Bronze	**LTD5 BP ORB**		$245
		Oil Rubbed Bronze	**LTD5 BP SB**		$245
		Matte Black	**LTD5 BP BK**		$245
	ABS	Satin Stainless	**LTD5 BA SS**	2	$195
		Polished Stainless	**LTD5 BA PS**		$245
		Satin Bronze	**LTD5 BA ORB**		$245
		Oil Rubbed Bronze	**LTD5 BA SB**		$245
		Matte Black	**LTD5 BA BK**		$245
	Stainless Steel	Satin Stainless	**LTD5 BS SS**	4	$290
		Polished Stainless	**LTD5 BS PS**		$340
		Satin Bronze	**LTD5 BS ORB**		$340
		Oil Rubbed Bronze	**LTD5 BS SB**		$340
		Matte Black	**LTD5 BS BK**		$340

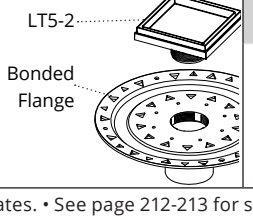

*See page 169 for more information on flow rates. • See page 212-213 for shipping information.

Specifications	
Insert Material:	12 Ga. 304L Stainless Steel
Throat Material:	12 Ga. 304L Stainless Steel
Flow Rate:	9 GPM Standard 21 GPM High Flow

TD 15 - Tile Drain

5"x5" Center Drain

Description	Finish	Model	Lbs	List
5" x 5" T 15 A Tile Drain Strainer with 4" Throat:	Satin Stainless Polished Stainless Satin Bronze Oil Rubbed Bronze Matte Black	**T 15 A SS** **T 15 A PS** **T 15 A ORB** **T 15 A SB** **T 15 A BK**	1	$400 $460 $460 $460 $460

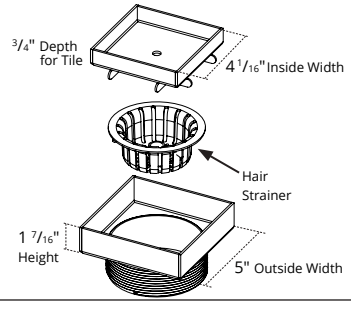

Description	Drain Body	Finish	Model	Lbs	List
T TRADITIONAL WATERPROOFING **5" x 5" TD 15 Kit with Case Iron Drain Body with 2" Outlet. Kit Includes:** 1 - T 15 A Tile Drain Strainer 1 - DKEY Lift-Out Key 1 - HS 4 Hair Strainer 1 - CDI 42/CDA 42/CDP 42 Drain Body	Cast Iron	Satin Stainless Polished Stainless Satin Bronze Oil Rubbed Bronze Matte Black	**TD 15-2I SS** **TD 15-2I PS** **TD 15-2I ORB** **TD 15-2I SB** **TD 15-2I BK**	5	$515 $575 $575 $575 $575
	ABS	Satin Stainless Polished Stainless Satin Bronze Oil Rubbed Bronze Matte Black	**TD 15-2A SS** **TD 15-2A PS** **TD 15-2A ORB** **TD 15-2A SB** **TD 15-2A BK**	2	$515 $575 $575 $575 $575
	PVC	Satin Stainless Polished Stainless Satin Bronze Oil Rubbed Bronze Matte Black	**TD 15-2P SS** **TD 15-2P PS** **TD 15-2P ORB** **TD 15-2P SB** **TD 15-2P BK**	2	$515 $575 $575 $575 $575

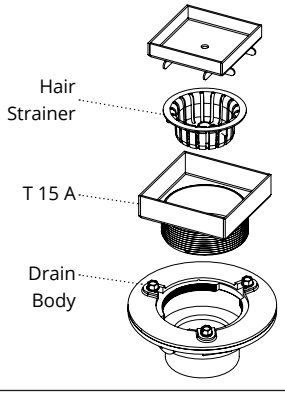

Description	Bonded Flange	Finish	Model	Lbs	List
L/F LIQUID/FABRIC WATERPROOFING **5" x 5" TD 15 Kit with Bonded Flange 2", 3", and 4" Outlet. Kit Includes:** 1 - T 15 B Tile Drain Strainer 1 - DKEY Lift-Out Key 1 - HS 4 Hair Strainer 1 - BFP 42/ BFA 42/ BFS 42 Bonded Flange	PVC	Satin Stainless Polished Stainless Satin Bronze Oil Rubbed Bronze Matte Black	**TDB 15-P SS** **TDB 15-P PS** **TDB 15-P ORB** **TDB 15-P SB** **TDB 15-P BK**	2	$515 $575 $575 $575 $575
	ABS	Satin Stainless Polished Stainless Satin Bronze Oil Rubbed Bronze Matte Black	**TDB 15-A SS** **TDB 15-A PS** **TDB 15-A ORB** **TDB 15-A SB** **TDB 15-A BK**	2	$515 $575 $575 $575 $575
	Stainless Steel	Satin Stainless Polished Stainless Satin Bronze Oil Rubbed Bronze Matte Black	**TDB 15-S SS** **TDB 15-S PS** **TDB 15-S ORB** **TDB 15-S SB** **TDB 15-S BK**	4	$610 $690 $690 $690 $690

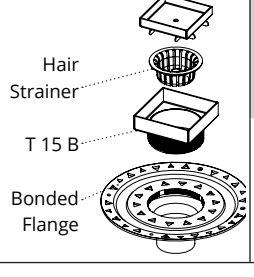

Description	Drain Body	Finish	Model	Lbs	List
HIGH FLOW **5" x 5" TD 15 Kit with HIGH FLOW Drain Body 3" Outlet. Kit Includes:** 1 - T 15 A Tile Drain Strainer 1 - DKEY Lift-Out Key 1 - HS 4 Hair Strainer 1 - CDI/ CDA/ CDP 43 Drain Body	Cast Iron**	Satin Stainless Polished Stainless Satin Bronze Oil Rubbed Bronze Matte Black	**TD 15-3I SS** **TD 15-3I PS** **TD 15-3I ORB** **TD 15-3I SB** **TD 15-3I BK**	22	$535 $595 $595 $595 $595

**If ABS or PVC drain body desired, replace I with A or P in model number (Example: TD 15-3A SS)

*See page 169 for more information on flow rates. • See page 230-231 for shipping information.

TD 20 - Tile Drain

8"x8" Center Drain

Specifications	
Insert Material:	12 Ga. 304L Stainless Steel
Throat Material:	12 Ga. 304L Stainless Steel
Flow Rate:	9 GPM Standard 21 GPM High Flow

Description	Finish	Model	Lbs	List
8" x 8" T 20 A Tile Drain Strainer with 4" Throat:	Satin Stainless	**T 20 A SS**	1	$480
	Polished Stainless	**T 20 A PS**		$540
	Satin Bronze	**T 20 A ORB**		$540
	Oil Rubbed Bronze	**T 20 A SB**		$540
	Matte Black	**T 20 A BK**		$540

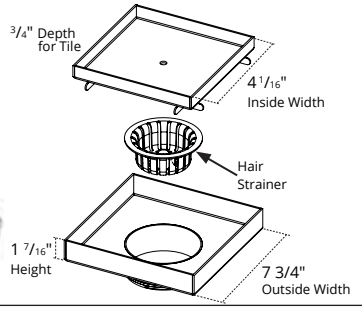

Description	Drain Body	Finish	Model	Lbs	List
T TRADITIONAL WATERPROOFING **8" x 8" TD 20 Kit with Case Iron Drain Body with 2" Outlet. Kit Includes:** 1 - T 20 A Tile Drain Strainer 1 - DKEY Lift-Out Key 1 - HS 4 Hair Strainer 1 - CDI 42/CDA 42/CDP 42 Drain Body	Cast Iron	Satin Stainless	**TD 20-2I SS**	5	$595
		Polished Stainless	**TD 20-2I PS**		$655
		Satin Bronze	**TD 20-2I ORB**		$655
		Oil Rubbed Bronze	**TD 20-2I SB**		$655
		Matte Black	**TD 20-2I BK**		$655
	ABS	Satin Stainless	**TD 20-2A SS**	2	$595
		Polished Stainless	**TD 20-2A PS**		$655
		Satin Bronze	**TD 20-2A ORB**		$655
		Oil Rubbed Bronze	**TD 20-2A SB**		$655
		Matte Black	**TD 20-2A BK**		$655
	PVC	Satin Stainless	**TD 20-2P SS**	2	$595
		Polished Stainless	**TD 20-2P PS**		$655
		Satin Bronze	**TD 20-2P ORB**		$655
		Oil Rubbed Bronze	**TD 20-2P SB**		$655
		Matte Black	**TD 20-2P BK**		$655

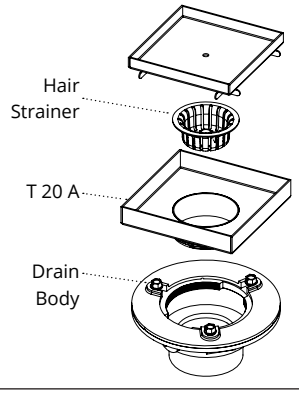

Description	Bonded Flange	Finish	Model	Lbs	List
L/F LIQUID/FABRIC WATERPROOFING **8" x 8" TD 20 Kit with Bonded Flange 2", 3", and 4" Outlet. Kit Includes:** 1 - T 20 B Tile Drain Strainer 1 - DKEY Lift-Out Key 1 - HS 4 Hair Strainer 1 - BFP 42/ BFA 42/ BFS 42 Bonded Flange	PVC	Satin Stainless	**TDB 20-P SS**	2	$595
		Polished Stainless	**TDB 20-P PS**		$645
		Satin Bronze	**TDB 20-P ORB**		$645
		Oil Rubbed Bronze	**TDB 20-P SB**		$645
		Matte Black	**TDB 20-P BK**		$645
	ABS	Satin Stainless	**TDB 20-A SS**	2	$595
		Polished Stainless	**TDB 20-A PS**		$645
		Satin Bronze	**TDB 20-A ORB**		$645
		Oil Rubbed Bronze	**TDB 20-A SB**		$645
		Matte Black	**TDB 20-A BK**		$645
	Stainless Steel	Satin Stainless	**TDB 20-S SS**	4	$610
		Polished Stainless	**TDB 20-S PS**		$690
		Satin Bronze	**TDB 20-S ORB**		$690
		Oil Rubbed Bronze	**TDB 20-S SB**		$690
		Matte Black	**TDB 20-S BK**		$690

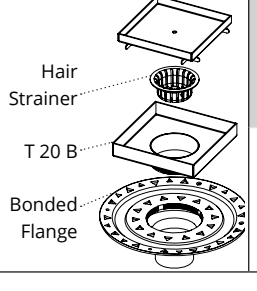

Description	Drain Body	Finish	Model	Lbs	List
HIGH FLOW **8" x 8" TD 20 Kit with HIGH FLOW Drain Body 3" Outlet. Kit Includes:** 1 - T 20 A Tile Drain Strainer 1 - DKEY Lift-Out Key 1 - HS 4 Hair Strainer 1 - CDI/ CDA/ CDP 43 Drain Body	Cast Iron**	Satin Stainless	TD 20-3I SS	22	$605
		Polished Stainless	TD 20-3I PS		$665
		Satin Bronze	TD 20-3I ORB		$665
		Oil Rubbed Bronze	TD 20-3I SB		$665
		Matte Black	TD 20-3I BK		$665

**If ABS or PVC drain body desired, replace I with A or P in model number (Example: TD 20-3A SS)

*See page 169 for more information on flow rates. • See page 230-232 for shipping information.

Specifications	
Insert Material:	304L Stainless Steel
Throat Material:	304L Stainless Steel
Flow Rate:	9 GPM Standard 21 GPM High Flow

RTD 15 - Tile Drain

5" Round Center Drain

Description	Finish	Model	Lbs	List
5" Round RT 15 A Tile Drain Strainer with 4" Throat:	Satin Stainless Polished Stainless Satin Bronze Oil Rubbed Bronze Matte Black	**RT 15 A SS** **RT 15 A PS** **RT 15 A ORB** **RT 15 A SB** **RT 15 A BK**	1	$575 $675 $675 $675 $675

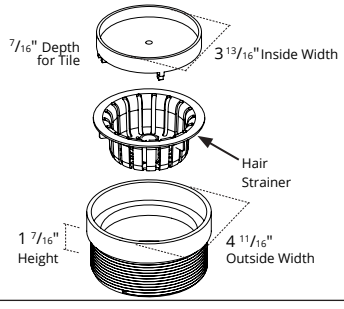

Description	Drain Body	Finish	Model	Lbs	List
T TRADITIONAL WATERPROOFING **5" Round RTD 15 Kit with Case Iron Drain Body with 2" Outlet. Kit Includes:** 1 - RT 15 A Tile Drain Strainer 1 - DKEY Lift-Out Key 1 - HS 4 Hair Strainer 1 - CDI 42/CDA 42/CDP 42 Drain Body	Cast Iron	Satin Stainless Polished Stainless Satin Bronze Oil Rubbed Bronze Matte Black	**RTD 15-2I SS** **RTD 15-2I PS** **RTD 15-2I ORB** **RTD 15-2I SB** **RTD 15-2I BK**	5	$690 $790 $790 $790 $790
	ABS	Satin Stainless Polished Stainless Satin Bronze Oil Rubbed Bronze Matte Black	**RTD 15-2A SS** **RTD 15-2A PS** **RTD 15-2A ORB** **RTD 15-2A SB** **RTD 15-2A BK**	2	$690 $790 $790 $790 $790
	PVC	Satin Stainless Polished Stainless Satin Bronze Oil Rubbed Bronze Matte Black	**RTD 15-2P SS** **RTD 15-2P PS** **RTD 15-2P ORB** **RTD 15-2P SB** **RTD 15-2P BK**	2	$690 $790 $790 $790 $790

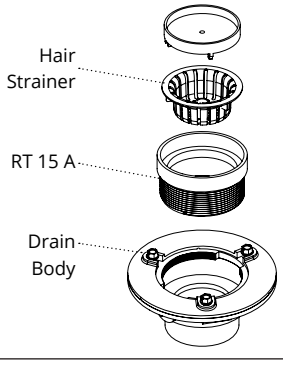

Description	Bonded Flange	Finish	Model	Lbs	List
L/F LIQUID/FABRIC WATERPROOFING **5" Round RTD 15 Kit with Bonded Flange 2", 3", and 4" Outlet. Kit Includes:** 1 - RT 15 B Tile Drain Strainer 1 - DKEY Lift-Out Key 1 - HS 4 Hair Strainer 1 - BFP 42/ BFA 42/ BFS 42 Bonded Flange	PVC	Satin Stainless Polished Stainless Satin Bronze Oil Rubbed Bronze Matte Black	**RTDB 15-P SS** **RTDB 15-P PS** **RTDB 15-P ORB** **RTDB 15-P SB** **RTDB 15-P BK**	2	$690 $790 $790 $790 $790
	ABS	Satin Stainless Polished Stainless Satin Bronze Oil Rubbed Bronze Matte Black	**RTDB 15-A SS** **RTDB 15-A PS** **RTDB 15-A ORB** **RTDB 15-A SB** **RTDB 15-A BK**	2	$690 $790 $790 $790 $790
	Stainless Steel	Satin Stainless Polished Stainless Satin Bronze Oil Rubbed Bronze Matte Black	**RTDB 15-S SS** **RTDB 15-S PS** **RTDB 15-S ORB** **RTDB 15-S SB** **RTDB 15-S BK**	4	$785 $885 $885 $885 $885

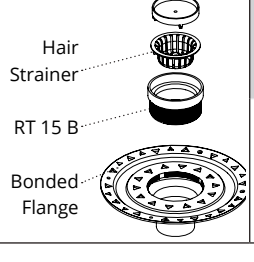

Description	Drain Body	Finish	Model	Lbs	List
HIGH FLOW **5" Round RTD 15 Kit with HIGH FLOW Drain Body 3" Outlet. Kit Includes:** 1 - RT 15 A Tile Drain Strainer 1 - DKEY Lift-Out Key 1 - HS 4 Hair Strainer 1 - CDI/ CDA/ CDP 43 Drain Body	Cast Iron**	Satin Stainless Polished Stainless Satin Bronze Oil Rubbed Bronze Matte Black	RTD 15-3I SS RTD 15-3I PS RTD 15-3I ORB RTD 15-3I SB RTD 15-3I BK	22	$700 $800 $800 $800 $800

**If ABS or PVC drain body desired, replace I with A or P in model number (Example: RTD 15-3A SS)

*See page 169 for more information on flow rates. • See page 220-221 for shipping information.

XD 4 - Criss Cross

4"x4" Center Drain

Specifications	
Decorative Plate Material:	7 Ga. 304L Stainless Steel
Throat Material:	304L Stainless Steel
Flow Rate:	9 GPM Standard 21 GPM High Flow

Description	Finish	Model	Lbs	List
4" x 4" 304L Stainless Steel Strainer with 2" Throat: 1 - XS 4 4" x 4" Decorative Plate 1 - T 42 2" Throat 1 - DKEY Lift-Out Key 1 - HS 2 Hair Strainer	Satin Stainless Polished Stainless Satin Bronze Oil Rubbed Bronze Matte Black	**X 4-SS** **X 4-PS** **X 4-ORB** **X 4-SB** **X 4-BK**	1	$265 $345 $345 $345 $345

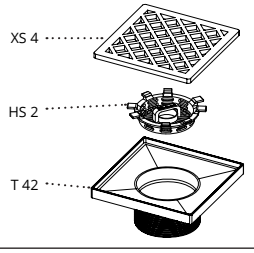

Description	Drain Body	Finish	Model	Lbs	List
T TRADITIONAL WATERPROOFING **4" x 4" XD 4 Kit with Drain Body 2" Outlet. Kit Includes:** 1 - XS 4 4" x 4" Decorative Plate 1 - T 42 2" Throat 1 - DKEY Lift-Out Key 1 - HS 2 Hair Strainer 1 - CDI 22/CDIH 22/CDP 22/CDA 22 Drain Body	Cast Iron	Satin Stainless Polished Stainless Satin Bronze Oil Rubbed Bronze Matte Black	**XD 4-2I SS** **XD 4-2I PS** **XD 4-2I ORB** **XD 4-2I SB** **XD 4-2I BK**	5	$330 $410 $410 $410 $410
	Cast Iron (For Hot Mop)	Satin Stainless Polished Stainless Satin Bronze Oil Rubbed Bronze Matte Black	**XD 4-2H SS** **XD 4-2HPS** **XD 4-2H ORB** **XD 4-2H SB** **XD 4-2H BK**	5	$330 $410 $410 $410 $410
	ABS	Satin Stainless Polished Stainless Satin Bronze Oil Rubbed Bronze Matte Black	**XD 4-2A SS** **XD 4-2A PS** **XD 4-2A ORB** **XD 4-2A SB** **XD 4-2A BK**	2	$315 $395 $395 $395 $395
	PVC	Satin Stainless Polished Stainless Satin Bronze Oil Rubbed Bronze Matte Black	**XD 4-2P SS** **XD 4-2P PS** **XD 4-2P ORB** **XD 4-2P SB** **XD 4-2P BK**	2	$315 $395 $395 $395 $395

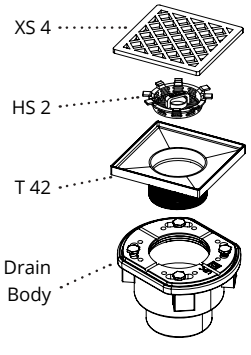

Description	Bonded Flange	Finish	Model	Lbs	List
L/F LIQUID/FABRIC WATERPROOFING **4" x 4" XD 4 Kit with Bonded Flange 2", 3", and 4" Outlet. Kit Includes:** 1 - XS 4 4" x 4" Decorative Plate 1 - T 42 2" Throat 1 - DKEY Lift-Out Key 1 - HS 2 Hair Strainer 1 - BFP 22/ BFA 22/ BFS 22 Bonded Flange	PVC	Satin Stainless Polished Stainless Satin Bronze Oil Rubbed Bronze Matte Black	**XDB 4-P SS** **XDB 4-P PS** **XDB 4-P ORB** **XDB 4-P SB** **XDB 4-P BK**	2	$365 $445 $445 $445 $445
	ABS	Satin Stainless Polished Stainless Satin Bronze Oil Rubbed Bronze Matte Black	**XDB 4-A SS** **XDB 4-A PS** **XDB 4-A ORB** **XDB 4-A SB** **XDB 4-A BK**	2	$365 $445 $445 $445 $445
	Stainless Steel	Satin Stainless Polished Stainless Satin Bronze Oil Rubbed Bronze Matte Black	**XDB 4-S SS** **XDB 4-S PS** **XDB 4-S ORB** **XDB 4-S SB** **XDB 4-S BK**	4	$460 $540 $540 $540 $540

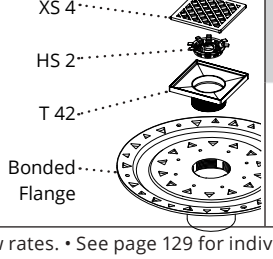

*See page 169 for more information on flow rates. • See page 129 for individual components. • See page 237-238 for shipping information.

Specifications	
Decorative Plate Material:	7 Ga. 304L Stainless Steel
Throat Material:	304L Stainless Steel
Flow Rate:	9 GPM Standard 21 GPM High Flow

XD 5 - Criss Cross

5"x5" Center Drain

Description	Finish	Model	Lbs	List
5" x 5" 304L Stainless Steel Strainer with 2" Throat: 1 - XS 5 5" x 5" Decorative Plate 1 - T 52 2" Throat 1 - DKEY Lift-Out Key 1 - HS 2 Hair Strainer	Satin Stainless	**X 5-SS**	1	$295
	Polished Stainless	**X 5-PS**		$380
	Satin Bronze	**X 5-ORB**		$380
	Oil Rubbed Bronze	**X 5-SB**		$380
	Matte Black	**X 5-BK**		$380

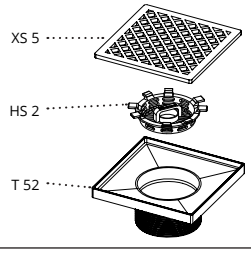

Description	Drain Body	Finish	Model	Lbs	List
T TRADITIONAL WATERPROOFING **5" x 5" XD 5 Kit with Drain Body 2" Outlet. Kit Includes:** 1 - XS 5 5" x 5" Decorative Plate 1 - T 52 2" Throat 1 - DKEY Lift-Out Key 1 - HS 2 Hair Strainer 1 - CDI 22/CDIH 22/CDP 22/CDA 22 Drain Body	Cast Iron	Satin Stainless	**XD 5-2I SS**	5	$360
		Polished Stainless	**XD 5-2I PS**		$445
		Satin Bronze	**XD 5-2I ORB**		$445
		Oil Rubbed Bronze	**XD 5-2I SB**		$445
		Matte Black	**XD 5-2I BK**		$445
	Cast Iron (For Hot Mop)	Satin Stainless	**XD 5-2H SS**	5	$360
		Polished Stainless	**XD 5-2HPS**		$445
		Satin Bronze	**XD 5-2H ORB**		$445
		Oil Rubbed Bronze	**XD 5-2H ORB**		$445
		Matte Black	**XD 5-2H BK**		$445
	ABS	Satin Stainless	**XD 5-2A SS**	2	$345
		Polished Stainless	**XD 5-2A PS**		$430
		Satin Bronze	**XD 5-2A ORB**		$430
		Oil Rubbed Bronze	**XD 5-2A ORB**		$430
		Matte Black	**XD 5-2A BK**		$430
	PVC	Satin Stainless	**XD 5-2P SS**	2	$345
		Polished Stainless	**XD 5-2P PS**		$430
		Satin Bronze	**XD 5-2P ORB**		$430
		Oil Rubbed Bronze	**XD 5-2P ORB**		$430
		Matte Black	**XD 5-2P BK**		$430

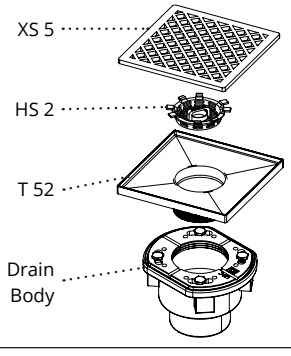

Description	Bonded Flange	Finish	Model	Lbs	List
L/F LIQUID/FABRIC WATERPROOFING **5" x 5" XD 5 Kit with Bonded Flange 2", 3", and 4" Outlet. Kit Includes:** 1 - XS 5 5" x 5" Decorative Plate 1 - T 52 2" Throat 1 - DKEY Lift-Out Key 1 - HS 2 Hair Strainer 1 - BFP 22/ BFA 22/ BFS 22 Bonded Flange	PVC	Satin Stainless	**XDB 5-P SS**	2	$395
		Polished Stainless	**XDB 5-P PS**		$480
		Satin Bronze	**XDB 5-P ORB**		$480
		Oil Rubbed Bronze	**XDB 5-P SB**		$480
		Matte Black	**XDB 5-P BK**		$480
	ABS	Satin Stainless	**XDB 5-A SS**	2	$395
		Polished Stainless	**XDB 5-A PS**		$480
		Satin Bronze	**XDB 5-A ORB**		$480
		Oil Rubbed Bronze	**XDB 5-A SB**		$480
		Matte Black	**XDB 5-A BK**		$480
	Stainless Steel	Satin Stainless	**XDB 5-S SS**	4	$490
		Polished Stainless	**XDB 5-S PS**		$575
		Satin Bronze	**XDB 5-S ORB**		$575
		Oil Rubbed Bronze	**XDB 5-S SB**		$575
		Matte Black	**XDB 5-S BK**		$575

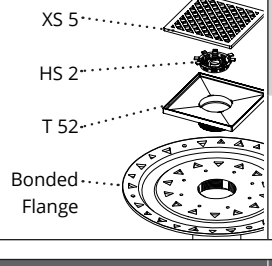

Description	Drain Body	Finish	Model	Lbs	List
HIGH FLOW **5" x 5" XD 5 Kit with HIGH FLOW Drain Body 3" Outlet. Kit Includes:** 1 - XS 5 5" x 5" Decorative Plate 1 - T 54 4" Throat (High Flow) 1 - DKEY Lift-Out Key 1 - HS 4 Hair Strainer 1 - CDI/ CDA/ CDP 43 Drain Body	Cast Iron**	Satin Stainless	**XD 5-3I SS**	22	$415
		Polished Stainless	**XD 5-3I PS**		$500
		Satin Bronze	**XD 5-3I ORB**		$500
		Oil Rubbed Bronze	**XD 5-3I SB**		$500
		Matte Black	**XD 5-3I BK**		$500

**If ABS or PVC drain body desired, replace I with A or P in model number (Example: QD 5-3A SS)

*See page 169 for more information on flow rates. • See page 130 for individual components. • See page 237-238 for shipping information.

QD 4 - Squares

4"x4" Center Drain

Specifications	
Decorative Plate Material:	7 Ga. 304L Stainless Steel
Throat Material:	304L Stainless Steel
Flow Rate:	9 GPM Standard 21 GPM High Flow

Description	Finish	Model	Lbs	List
4" x 4" 304L Stainless Steel Strainer with 2" Throat: 1 - QS 4 4" x 4" Decorative Plate 1 - T 42 2" Throat 1 - DKEY Lift-Out Key 1 - HS 2 Hair Strainer	Satin Stainless Polished Stainless Satin Bronze Oil Rubbed Bronze Matte Black	**Q 4-SS** **Q 4-PS** **Q 4-ORB** **Q 4-SB** **Q 4-BK**	1	$265 $345 $345 $345 $345

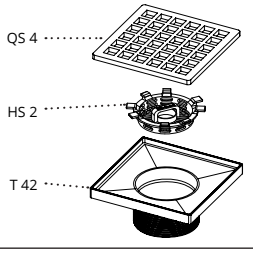

Description	Drain Body	Finish	Model	Lbs	List
T TRADITIONAL WATERPROOFING **4" x 4" QD 4 Kit with Drain Body 2" Outlet. Kit Includes:** 1 - QS 4 4" x 4" Decorative Plate 1 - T 42 2" Throat 1 - DKEY Lift-Out Key 1 - HS 2 Hair Strainer 1 - CDI 22/CDIH 22/CDP 22/CDA 22 Drain Body	Cast Iron	Satin Stainless Polished Stainless Satin Bronze Oil Rubbed Bronze Matte Black	**QD 4-2I SS** **QD 4-2I PS** **QD 4-2I ORB** **QD 4-2I SB** **QD 4-2I BK**	5	$330 $410 $410 $410 $410
	Cast Iron (For Hot Mop)	Satin Stainless Polished Stainless Satin Bronze Oil Rubbed Bronze Matte Black	**QD 4-2H SS** **QD 4-2HPS** **QD 4-2H ORB** **QD 4-2H SB** **QD 4-2H BK**	5	$330 $410 $410 $410 $410
	ABS	Satin Stainless Polished Stainless Satin Bronze Oil Rubbed Bronze Matte Black	**QD 4-2A SS** **QD 4-2A PS** **QD 4-2A ORB** **QD 4-2A SB** **QD 4-2A BK**	2	$315 $395 $395 $395 $395
	PVC	Satin Stainless Polished Stainless Satin Bronze Oil Rubbed Bronze Matte Black	**QD 4-2P SS** **QD 4-2P PS** **QD 4-2P ORB** **QD 4-2P SB** **QD 4-2P BK**	2	$315 $395 $395 $395 $395

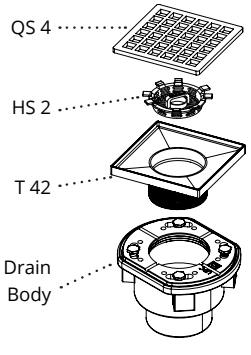

Description	Bonded Flange	Finish	Model	Lbs	List
L/F LIQUID/FABRIC WATERPROOFING **4" x 4" QD 4 Kit with Bonded Flange 2", 3", and 4" Outlet. Kit Includes:** 1 - QS 4 4" x 4" Decorative Plate 1 - T 42 2" Throat 1 - DKEY Lift-Out Key 1 - HS 2 Hair Strainer 1 - BFP 22/ BFA 22/ BFS 22 Bonded Flange	PVC	Satin Stainless Polished Stainless Satin Bronze Oil Rubbed Bronze Matte Black	**QDB 4-P SS** **QDB 4-P PS** **QDB 4-P ORB** **QDB 4-P SB** **QDB 4-P BK**	2	$365 $445 $445 $445 $445
	ABS	Satin Stainless Polished Stainless Satin Bronze Oil Rubbed Bronze Matte Black	**QDB 4-A SS** **QDB 4-A PS** **QDB 4-A ORB** **QDB 4-A SB** **QDB 4-A BK**	2	$365 $445 $445 $445 $445
	Stainless Steel	Satin Stainless Polished Stainless Satin Bronze Oil Rubbed Bronze Matte Black	**QDB 4-S SS** **QDB 4-S PS** **QDB 4-S ORB** **QDB 4-S SB** **QDB 4-S BK**	4	$460 $540 $540 $540 $540

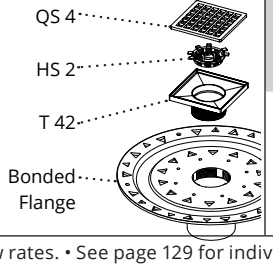

*See page 169 for more information on flow rates. • See page 129 for individual components. • See page 216-217 for shipping information.

Specifications	
Decorative Plate Material:	7 Ga. 304L Stainless Steel
Throat Material:	304L Stainless Steel
Flow Rate:	9 GPM Standard 21 GPM High Flow

QD 5 - Squares

5"x5" Center Drain

Description	Finish	Model	Lbs	List
5" x 5" 304L Stainless Steel Strainer with 2" Throat: 1 - QS 5 5" x 5" Decorative Plate 1 - T 52 2" Throat 1 - DKEY Lift-Out Key 1 - HS 2 Hair Strainer	Satin Stainless Polished Stainless Satin Bronze Oil Rubbed Bronze Matte Black	**Q 5-SS** **Q 5-PS** **Q 5-ORB** **Q 5-SB** **Q 5-BK**	1	$295 $380 $380 $380 $380

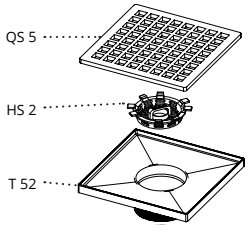

Description	Drain Body	Finish	Model	Lbs	List
T TRADITIONAL WATERPROOFING **5" x 5" QD 5 Kit with Drain Body 2" Outlet. Kit Includes:** 1 - QS 5 5" x 5" Decorative Plate 1 - T 52 2" Throat 1 - DKEY Lift-Out Key 1 - HS 2 Hair Strainer 1 - CDI 22/CDIH 22/CDP 22/CDA 22 Drain Body	Cast Iron	Satin Stainless Polished Stainless Satin Bronze Oil Rubbed Bronze Matte Black	**QD 5-2I SS** **QD 5-2I PS** **QD 5-2I ORB** **QD 5-2I SB** **QD 5-2I BK**	5	$360 $445 $445 $445 $445
	Cast Iron (For Hot Mop)	Satin Stainless Polished Stainless Satin Bronze Oil Rubbed Bronze Matte Black	**QD 5-2H SS** **QD 5-2HPS** **QD 5-2H ORB** **QD 5-2H SB** **QD 5-2H BK**	5	$360 $445 $445 $445 $445
	ABS	Satin Stainless Polished Stainless Satin Bronze Oil Rubbed Bronze Matte Black	**QD 5-2A SS** **QD 5-2A PS** **QD 5-2A ORB** **QD 5-2A SB** **QD 5-2A BK**	2	$345 $430 $430 $430 $430
	PVC	Satin Stainless Polished Stainless Satin Bronze Oil Rubbed Bronze Matte Black	**QD 5-2P SS** **QD 5-2P PS** **QD 5-2P ORB** **QD 5-2P SB** **QD 5-2P BK**	2	$345 $430 $430 $430 $430

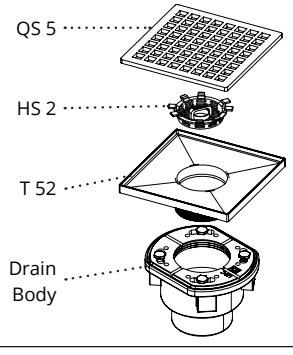

Description	Bonded Flange	Finish	Model	Lbs	List
L/F LIQUID/FABRIC WATERPROOFING **5" x 5" QD 5 Kit with Bonded Flange 2", 3", and 4" Outlet. Kit Includes:** 1 - QS 5 5" x 5" Decorative Plate 1 - T 52 2" Throat 1 - DKEY Lift-Out Key 1 - HS 2 Hair Strainer 1 - BFP 22/ BFA 22/ BFS 22 Bonded Flange	PVC	Satin Stainless Polished Stainless Satin Bronze Oil Rubbed Bronze Matte Black	**QDB 5-P SS** **QDB 5-P PS** **QDB 5-P ORB** **QDB 5-P SB** **QDB 5-P BK**	2	$395 $480 $480 $480 $480
	ABS	Satin Stainless Polished Stainless Satin Bronze Oil Rubbed Bronze Matte Black	**QDB 5-A SS** **QDB 5-A PS** **QDB 5-A ORB** **QDB 5-A SB** **QDB 5-A BK**	2	$395 $480 $480 $480 $480
	Stainless Steel	Satin Stainless Polished Stainless Satin Bronze Oil Rubbed Bronze Matte Black	**QDB 5-S SS** **QDB 5-S PS** **QDB 5-S ORB** **QDB 5-S SB** **QDB 5-S BK**	4	$490 $575 $575 $575 $575

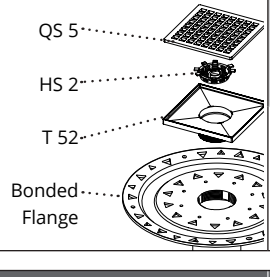

Description	Drain Body	Finish	Model	Lbs	List
HIGH FLOW **5" x 5" QD 5 Kit with HIGH FLOW Drain Body 3" Outlet. Kit Includes:** 1 - QS 5 5" x 5" Decorative Plate 1 - T 54 4" Throat (High Flow) 1 - DKEY Lift-Out Key 1 - HS 4 Hair Strainer 1 - CDI/ CDA/ CDP 43 Drain Body	Cast Iron**	Satin Stainless Polished Stainless Satin Bronze Oil Rubbed Bronze Matte Black	QD 5-3I SS QD 5-3I PS QD 5-3I ORB QD 5-3I SB QD 5-3I BK	22	$415 $500 $500 $500 $500

**If ABS or PVC drain body desired, replace I with A or P in model number (Example: QD 5-3A SS)

*See page 169 for more information on flow rates. • See page 130 for individual components. • See page 216-217 for shipping information.

RQD 5 - Squares

5" Round Center Drain

Specifications	
Decorative Plate Material:	7 Ga. 304L Stainless Steel
Throat Material:	304L Stainless Steel
Flow Rate:	9 GPM Standard 21 GPM High Flow

Description	Finish	Model	Lbs	List
5" x 5" 304L Stainless Steel Strainer with 2" Throat: 1 - RQS 5 5" Round Decorative Plate 1 - R 52 2" Throat 1 - DKEY Lift-Out Key 1 - HS 2 Hair Strainer	Satin Stainless Polished Stainless Satin Bronze Oil Rubbed Bronze Matte Black	**RQ 5-SS** **RQ 5-PS** **RQ 5-ORB** **RQ 5-SB** **RQ 5-BK**	1	$295 $380 $380 $380 $380

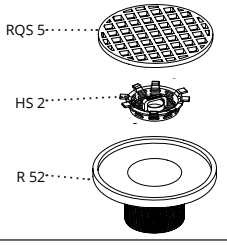

Description	Drain Body	Finish	Model	Lbs	List
T TRADITIONAL WATERPROOFING **5" x 5" RQD 5 Kit with Drain Body 2" Outlet. Kit Includes:** 1 - RQS 5 5" Round Decorative Plate 1 - R 52 2" Throat 1 - DKEY Lift-Out Key 1 - HS 2 Hair Strainer 1 - CDI 22/CDIH 22/CDP 22/CDA 22 Drain Body	Cast Iron	Satin Stainless Polished Stainless Satin Bronze Oil Rubbed Bronze Matte Black	**RQD 5-2I SS** **RQD 5-2I PS** **RQD 5-2I ORB** **RQD 5-2I SB** **RQD 5-2I BK**	5	$360 $445 $445 $445 $445
	Cast Iron (For Hot Mop)	Satin Stainless Polished Stainless Satin Bronze Oil Rubbed Bronze Matte Black	**RQD 5-2H SS** **RQD 5-2HPS** **RQD 5-2H ORB** **RQD 5-2H SB** **RQD 5-2H BK**	5	$360 $445 $445 $445 $445
	ABS	Satin Stainless Polished Stainless Satin Bronze Oil Rubbed Bronze Matte Black	**RQD 5-2A SS** **RQD 5-2A PS** **RQD 5-2A ORB** **RQD 5-2A SB** **RQD 5-2A BK**	2	$345 $430 $430 $430 $430
	PVC	Satin Stainless Polished Stainless Satin Bronze Oil Rubbed Bronze Matte Black	**RQD 5-2P SS** **RQD 5-2P PS** **RQD 5-2P ORB** **RQD 5-2P SB** **RQD 5-2P BK**	2	$345 $430 $430 $430 $430

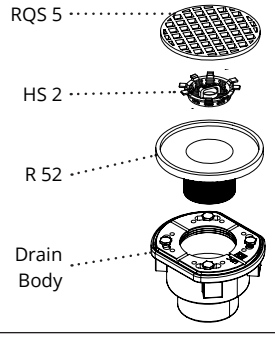

Description	Bonded Flange	Finish	Model	Lbs	List
L/F LIQUID/FABRIC WATERPROOFING **5" x 5" RQD 5 Kit with Bonded Flange 2", 3", and 4" Outlet. Kit Includes:** 1 - RQS 5 5" Round Decorative Plate 1 - R 52 2" Throat 1 - DKEY Lift-Out Key 1 - HS 2 Hair Strainer 1 - BFP 22/ BFA 22/ BFS 22 Bonded Flange	PVC	Satin Stainless Polished Stainless Satin Bronze Oil Rubbed Bronze Matte Black	**RQDB 5-P SS** **RQDB 5-P PS** **RQDB 5-P ORB** **RQDB 5-P SB** **RQDB 5-P BK**	2	$395 $480 $480 $480 $480
	ABS	Satin Stainless Polished Stainless Satin Bronze Oil Rubbed Bronze Matte Black	**RQDB 5-A SS** **RQDB 5-A PS** **RQDB 5-A ORB** **RQDB 5-A SB** **RQDB 5-A BK**	2	$395 $480 $480 $480 $480
	Stainless Steel	Satin Stainless Polished Stainless Satin Bronze Oil Rubbed Bronze Matte Black	**RQDB 5-S SS** **RQDB 5-S PS** **RQDB 5-S ORB** **RQDB 5-S SB** **RQDB 5-S BK**	4	$490 $575 $575 $575 $575

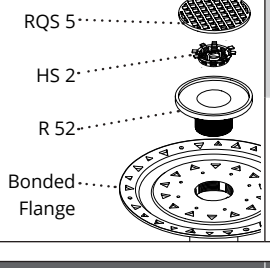

Description	Drain Body	Finish	Model	Lbs	List
HIGH FLOW **5" x 5" RQD 5 Kit with HIGH FLOW Drain Body 3" Outlet. Kit Includes:** 1 - RQS 5 5" Round Decorative Plate 1 - R 54 4" Throat (High Flow) 1 - DKEY Lift-Out Key 1 - HS 4 Hair Strainer 1 - CDI/ CDA/ CDP 43 Drain Body	Cast Iron**	Satin Stainless Polished Stainless Satin Bronze Oil Rubbed Bronze Matte Black	RQD 5-3I SS RQD 5-3I PS RQD 5-3I ORB RQD 5-3I SB RQD 5-3I BK	22	$415 $500 $500 $500 $500

**If ABS or PVC drain body desired, replace I with A or P in model number (Example: QD 5-3A SS)

*See page 169 for more information on flow rates. • See page 131 for individual components. • See page 220 for shipping information.

Specifications	
Decorative Plate Material:	7 Ga. 304L Stainless Steel
Throat Material:	304L Stainless Steel
Flow Rate:	9 GPM Standard 21 GPM High Flow

RMD 5 - Moor

5" Round Center Drain

Description	Finish	Model	Lbs	List
5" x 5" 304L Stainless Steel Strainer with 2" Throat: 1 - RMS 5 5" Round Decorative Plate 1 - R 52 2" Throat 1 - DKEY Lift-Out Key 1 - HS 2 Hair Strainer	Satin Stainless Polished Stainless Satin Bronze Oil Rubbed Bronze Matte Black	**RM 5-SS** **RM 5-PS** **RM 5-ORB** **RM 5-SB** **RM 5-BK**	1	$295 $380 $380 $380 $380

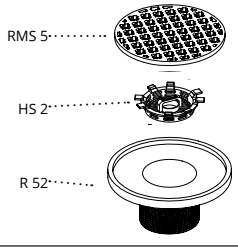

Description	Drain Body	Finish	Model	Lbs	List
T TRADITIONAL WATERPROOFING **5" x 5" RMD 5 Kit with Drain Body 2" Outlet. Kit Includes:** 1 - RMS 5 5" Round Decorative Plate 1 - R 52 2" Throat 1 - DKEY Lift-Out Key 1 - HS 2 Hair Strainer 1 - CDI 22/CDIH 22/CDP 22/CDA 22 Drain Body	Cast Iron	Satin Stainless Polished Stainless Satin Bronze Oil Rubbed Bronze Matte Black	**RMD 5-2I SS** **RMD 5-2I PS** **RMD 5-2I ORB** **RMD 5-2I SB** **RMD 5-2I BK**	5	$360 $445 $445 $445 $445
	Cast Iron (For Hot Mop)	Satin Stainless Polished Stainless Satin Bronze Oil Rubbed Bronze Matte Black	**RMD 5-2H SS** **RMD 5-2HPS** **RMD 5-2H ORB** **RMD 5-2H SB** **RMD 5-2H BK**	5	$360 $445 $445 $445 $445
	ABS	Satin Stainless Polished Stainless Satin Bronze Oil Rubbed Bronze Matte Black	**RMD 5-2A SS** **RMD 5-2A PS** **RMD 5-2A ORB** **RMD 5-2A SB** **RMD 5-2A BK**	2	$345 $430 $430 $430 $430
	PVC	Satin Stainless Polished Stainless Satin Bronze Oil Rubbed Bronze Matte Black	**RMD 5-2P SS** **RMD 5-2P PS** **RMD 5-2P ORB** **RMD 5-2P SB** **RMD 5-2P BK**	2	$345 $430 $430 $430 $430

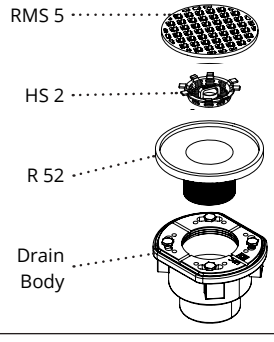

Description	Bonded Flange	Finish	Model	Lbs	List
L/F LIQUID/FABRIC WATERPROOFING **5" x 5" RMD 5 Kit with Bonded Flange 2", 3", and 4" Outlet. Kit Includes:** 1 - RMS 5 5" Round Decorative Plate 1 - R 52 2" Throat 1 - DKEY Lift-Out Key 1 - HS 2 Hair Strainer 1 - BFP 22/ BFA 22/ BFS 22 Bonded Flange	PVC	Satin Stainless Polished Stainless Satin Bronze Oil Rubbed Bronze Matte Black	**RMDB 5-P SS** **RMDB 5-P PS** **RMDB 5-P ORB** **RMDB 5-P SB** **RMDB 5-P BK**	2	$395 $480 $480 $480 $480
	ABS	Satin Stainless Polished Stainless Satin Bronze Oil Rubbed Bronze Matte Black	**RMDB 5-A SS** **RMDB 5-A PS** **RMDB 5-A ORB** **RMDB 5-A SB** **RMDB 5-A BK**	2	$395 $480 $480 $480 $480
	Stainless Steel	Satin Stainless Polished Stainless Satin Bronze Oil Rubbed Bronze Matte Black	**RMDB 5-S SS** **RMDB 5-S PS** **RMDB 5-S ORB** **RMDB 5-S SB** **RMDB 5-S BK**	4	$490 $575 $575 $575 $575

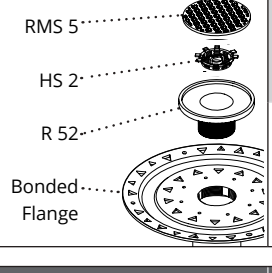

Description	Drain Body	Finish	Model	Lbs	List
HIGH FLOW **5" x 5" RMD 5 Kit with HIGH FLOW Drain Body 3" Outlet. Kit Includes:** 1 - RMS 5 5" Round Decorative Plate 1 - R 54 4" Throat (High Flow) 1 - DKEY Lift-Out Key 1 - HS 4 Hair Strainer 1 - CDI/ CDA/ CDP 43 Drain Body	Cast Iron**	Satin Stainless Polished Stainless Satin Bronze Oil Rubbed Bronze Matte Black	**RMD 5-3I SS** **RMD 5-3I PS** **RMD 5-3I ORB** **RMD 5-3I SB** **RMD 5-3I BK**	22	$415 $500 $500 $500 $500

**If ABS or PVC drain body desired, replace I with A or P in model number (Example: QD 5-3A SS)

*See page 169 for more information on flow rates. • See page 131 for individual components. • See page 218-219 for shipping information.

MD 4 - Moor

4"x4" Center Drain

Specifications	
Decorative Plate Material:	7 Ga. 304L Stainless Steel
Throat Material:	304L Stainless Steel
Flow Rate:	9 GPM Standard 21 GPM High Flow

Description	Finish	Model	Lbs	List
4" x 4" 304L Stainless Steel Strainer with 2" Throat: 1 - MS 4 4" x 4" Decorative Plate 1 - T 42 2" Throat 1 - DKEY Lift-Out Key 1 - HS 2 Hair Strainer	Satin Stainless Polished Stainless Satin Bronze Oil Rubbed Bronze Matte Black	**M 4-SS** **M 4-PS** **M 4-ORB** **M 4-SB** **M 4-BK**	1	$265 $345 $345 $345 $345

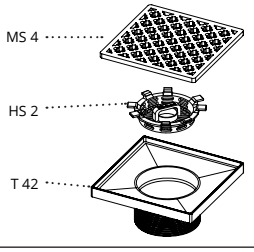

Description	Drain Body	Finish	Model	Lbs	List
T TRADITIONAL WATERPROOFING **4" x 4" MD 4 Kit with Drain Body 2" Outlet. Kit Includes:** 1 - MS 4 4" x 4" Decorative Plate 1 - T 42 2" Throat 1 - DKEY Lift-Out Key 1 - HS 2 Hair Strainer 1 - CDI 22/CDIH 22/CDP 22/CDA 22 Drain Body	Cast Iron	Satin Stainless Polished Stainless Satin Bronze Oil Rubbed Bronze Matte Black	**MD 4-2I SS** **MD 4-2I PS** **MD 4-2I ORB** **MD 4-2I SB** **MD 4-2I BK**	5	$330 $410 $410 $410 $410
	Cast Iron (For Hot Mop)	Satin Stainless Polished Stainless Satin Bronze Oil Rubbed Bronze Matte Black	**MD 4-2H SS** **MD 4-2HPS** **MD 4-2H ORB** **MD 4-2H SB** **MD 4-2H BK**	5	$330 $410 $410 $410 $410
	ABS	Satin Stainless Polished Stainless Satin Bronze Oil Rubbed Bronze Matte Black	**MD 4-2A SS** **MD 4-2A PS** **MD 4-2A ORB** **MD 4-2A SB** **MD 4-2A BK**	2	$315 $395 $395 $395 $395
	PVC	Satin Stainless Polished Stainless Satin Bronze Oil Rubbed Bronze Matte Black	**MD 4-2P SS** **MD 4-2P PS** **MD 4-2P ORB** **MD 4-2P SB** **MD 4-2P BK**	2	$315 $395 $395 $395 $395

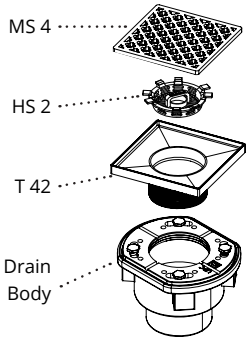

Description	Bonded Flange	Finish	Model	Lbs	List
L/F LIQUID/FABRIC WATERPROOFING **4" x 4" MD 4 Kit with Bonded Flange 2", 3", and 4" Outlet. Kit Includes:** 1 - MS 4 4" x 4" Decorative Plate 1 - T 42 2" Throat 1 - DKEY Lift-Out Key 1 - HS 2 Hair Strainer 1 - BFP 22/ BFA 22/ BFS 22 Bonded Flange	PVC	Satin Stainless Polished Stainless Satin Bronze Oil Rubbed Bronze Matte Black	**MDB 4-P SS** **MDB 4-P PS** **MDB 4-P ORB** **MDB 4-P SB** **MDB 4-P BK**	2	$365 $445 $445 $445 $445
	ABS	Satin Stainless Polished Stainless Satin Bronze Oil Rubbed Bronze Matte Black	**MDB 4-A SS** **MDB 4-A PS** **MDB 4-A ORB** **MDB 4-A SB** **MDB 4-A BK**	2	$365 $445 $445 $445 $445
	Stainless Steel	Satin Stainless Polished Stainless Satin Bronze Oil Rubbed Bronze Matte Black	**MDB 4-S SS** **MDB 4-S PS** **MDB 4-S ORB** **MDB 4-S SB** **MDB 4-S BK**	4	$460 $540 $540 $540 $540

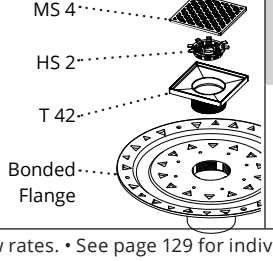

*See page 169 for more information on flow rates. • See page 129 for individual components. • See page 213-214 for shipping information.

Specifications	
Decorative Plate Material:	7 Ga. 304L Stainless Steel
Throat Material:	304L Stainless Steel
Flow Rate:	9 GPM Standard 21 GPM High Flow

MD 5 - Moor

5"x5" Center Drain

Description	Finish	Model	Lbs	List
5" x 5" 304L Stainless Steel Strainer with 2" Throat: 1 - MS 5 5" x 5" Decorative Plate 1 - T 52 2" Throat 1 - DKEY Lift-Out Key 1 - HS 2 Hair Strainer	Satin Stainless Polished Stainless Satin Bronze Oil Rubbed Bronze Matte Black	**M 5-SS** **M 5-PS** **M 5-ORB** **M 5-SB** **M 5-BK**	1	$295 $380 $380 $380 $380

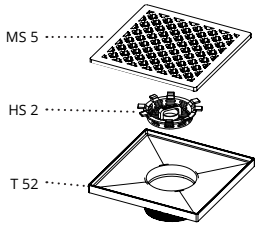

Description	Drain Body	Finish	Model	Lbs	List
T TRADITIONAL WATERPROOFING **5" x 5" MD 5 Kit with Drain Body 2" Outlet. Kit Includes:** 1 - MS 5 5" x 5" Decorative Plate 1 - T 52 2" Throat 1 - DKEY Lift-Out Key 1 - HS 2 Hair Strainer 1 - CDI 22/CDIH 22/CDP 22/CDA 22 Drain Body	Cast Iron	Satin Stainless Polished Stainless Satin Bronze Oil Rubbed Bronze Matte Black	**MD 5-2I SS** **MD 5-2I PS** **MD 5-2I ORB** **MD 5-2I SB** **MD 5-2I BK**	5	$360 $445 $445 $445 $445
	Cast Iron (For Hot Mop)	Satin Stainless Polished Stainless Satin Bronze Oil Rubbed Bronze Matte Black	**MD 5-2H SS** **MD 5-2HPS** **MD 5-2H ORB** **MD 5-2H SB** **MD 5-2H BK**	5	$360 $445 $445 $445 $445
	ABS	Satin Stainless Polished Stainless Satin Bronze Oil Rubbed Bronze Matte Black	**MD 5-2A SS** **MD 5-2A PS** **MD 5-2A ORB** **MD 5-2A SB** **MD 5-2A BK**	2	$345 $430 $430 $430 $430
	PVC	Satin Stainless Polished Stainless Satin Bronze Oil Rubbed Bronze Matte Black	**MD 5-2P SS** **MD 5-2P PS** **MD 5-2P ORB** **MD 5-2P SB** **MD 5-2P BK**	2	$345 $430 $430 $430 $430

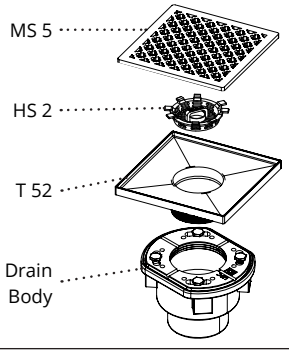

Description	Bonded Flange	Finish	Model	Lbs	List
L/F LIQUID/FABRIC WATERPROOFING **5" x 5" MD 5 Kit with Bonded Flange 2", 3", and 4" Outlet. Kit Includes:** 1 - MS 5 5" x 5" Decorative Plate 1 - T 52 2" Throat 1 - DKEY Lift-Out Key 1 - HS 2 Hair Strainer 1 - BFP 22/ BFA 22/ BFS 22 Bonded Flange	PVC	Satin Stainless Polished Stainless Satin Bronze Oil Rubbed Bronze Matte Black	**MDB 5-P SS** **MDB 5-P PS** **MDB 5-P ORB** **MDB 5-P SB** **MDB 5-P BK**	2	$395 $480 $480 $480 $480
	ABS	Satin Stainless Polished Stainless Satin Bronze Oil Rubbed Bronze Matte Black	**MDB 5-A SS** **MDB 5-A PS** **MDB 5-A ORB** **MDB 5-A SB** **MDB 5-A BK**	2	$395 $480 $480 $480 $480
	Stainless Steel	Satin Stainless Polished Stainless Satin Bronze Oil Rubbed Bronze Matte Black	**MDB 5-S SS** **MDB 5-S PS** **MDB 5-S ORB** **MDB 5-S SB** **MDB 5-S BK**	4	$490 $575 $575 $575 $575

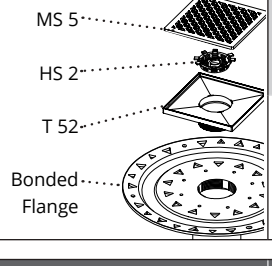

Description	Drain Body	Finish	Model	Lbs	List
HIGH FLOW **5" x 5" MD 5 Kit with HIGH FLOW Drain Body 3" Outlet. Kit Includes:** 1 - MS 5 5" x 5" Decorative Plate 1 - T 54 4" Throat (High Flow) 1 - DKEY Lift-Out Key 1 - HS 4 Hair Strainer 1 - CDI/ CDA/ CDP 43 Drain Body	Cast Iron**	Satin Stainless Polished Stainless Satin Bronze Oil Rubbed Bronze Matte Black	MD 5-3I SS MD 5-3I PS MD 5-3I ORB MD 5-3I SB MD 5-3I BK	22	$415 $500 $500 $500 $500

**If ABS or PVC drain body desired, replace I with A or P in model number (Example: QD 5-3A SS)

*See page 169 for more information on flow rates. • See page 130 for individual components. • See page 213-214 for shipping information.

KD 4 - Link

4"x4" Center Drain

Specifications	
Decorative Plate Material:	7 Ga. 304L Stainless Steel
Throat Material:	304L Stainless Steel
Flow Rate:	9 GPM Standard 21 GPM High Flow

Description	Finish	Model	Lbs	List
4" x 4" 304L Stainless Steel Strainer with 2" Throat: 1 - KS 4 4" x 4" Decorative Plate 1 - T 42 2" Throat 1 - DKEY Lift-Out Key 1 - HS 2 Hair Strainer	Satin Stainless Polished Stainless Satin Bronze Oil Rubbed Bronze Matte Black	**K 4-SS** **K 4-PS** **K 4-ORB** **K 4-SB** **K 4-BK**	1	$265 $345 $345 $345 $345

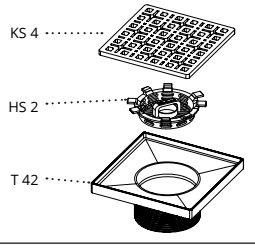

Description	Drain Body	Finish	Model	Lbs	List
T TRADITIONAL WATERPROOFING **4" x 4" KD 4 Kit with Drain Body 2" Outlet. Kit Includes:** 1 - KS 4 4" x 4" Decorative Plate 1 - T 42 2" Throat 1 - DKEY Lift-Out Key 1 - HS 2 Hair Strainer 1 - CDI 22/CDIH 22/CDP 22/CDA 22 Drain Body	Cast Iron	Satin Stainless Polished Stainless Satin Bronze Oil Rubbed Bronze Matte Black	**KD 4-2I SS** **KD 4-2I PS** **KD 4-2I ORB** **KD 4-2I SB** **KD 4-2I BK**	5	$330 $410 $410 $410 $410
	Cast Iron (For Hot Mop)	Satin Stainless Polished Stainless Satin Bronze Oil Rubbed Bronze Matte Black	**KD 4-2H SS** **KD 4-2HPS** **KD 4-2H ORB** **KD 4-2H SB** **KD 4-2H BK**	5	$330 $410 $410 $410 $410
	ABS	Satin Stainless Polished Stainless Satin Bronze Oil Rubbed Bronze Matte Black	**KD 4-2A SS** **KD 4-2A PS** **KD 4-2A ORB** **KD 4-2A SB** **KD 4-2A BK**	2	$315 $395 $395 $395 $395
	PVC	Satin Stainless Polished Stainless Satin Bronze Oil Rubbed Bronze Matte Black	**KD 4-2P SS** **KD 4-2P PS** **KD 4-2P ORB** **KD 4-2P SB** **KD 4-2P BK**	2	$315 $395 $395 $395 $395

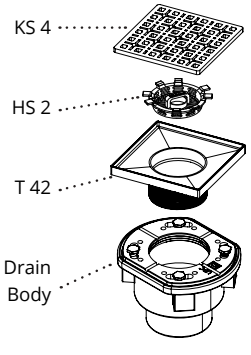

Description	Bonded Flange	Finish	Model	Lbs	List
L/F LIQUID/FABRIC WATERPROOFING **4" x 4" KD 4 Kit with Bonded Flange 2", 3", and 4" Outlet. Kit Includes:** 1 - KS 4 4" x 4" Decorative Plate 1 - T 42 2" Throat 1 - DKEY Lift-Out Key 1 - HS 2 Hair Strainer 1 - BFP 22/ BFA 22/ BFS 22 Bonded Flange	PVC	Satin Stainless Polished Stainless Satin Bronze Oil Rubbed Bronze Matte Black	**KDB 4-P SS** **KDB 4-P PS** **KDB 4-P ORB** **KDB 4-P SB** **KDB 4-P BK**	2	$365 $445 $445 $445 $445
	ABS	Satin Stainless Polished Stainless Satin Bronze Oil Rubbed Bronze Matte Black	**KDB 4-A SS** **KDB 4-A PS** **KDB 4-A ORB** **KDB 4-A SB** **KDB 4-A BK**	2	$365 $445 $445 $445 $445
	Stainless Steel	Satin Stainless Polished Stainless Satin Bronze Oil Rubbed Bronze Matte Black	**KDB 4-S SS** **KDB 4-S PS** **KDB 4-S ORB** **KDB 4-S SB** **KDB 4-S BK**	4	$460 $540 $540 $540 $540

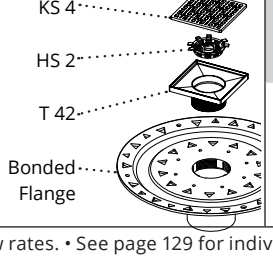

*See page 169 for more information on flow rates. • See page 129 for individual components. • See page 210-211 for shipping information.

Specifications	
Decorative Plate Material:	7 Ga. 304L Stainless Steel
Throat Material:	304L Stainless Steel
Flow Rate:	9 GPM Standard 21 GPM High Flow

KD 5 - Link

5"x5" Center Drain

Description	Finish	Model	Lbs	List
5" x 5" 304L Stainless Steel Strainer with 2" Throat: 1 - KS 5 5" x 5" Decorative Plate 1 - T 52 2" Throat 1 - DKEY Lift-Out Key 1 - HS 2 Hair Strainer	Satin Stainless Polished Stainless Satin Bronze Oil Rubbed Bronze Matte Black	**K 5-SS** **K 5-PS** **K 5-ORB** **K 5-SB** **K 5-BK**	1	$295 $380 $380 $380 $380

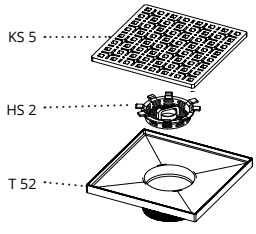

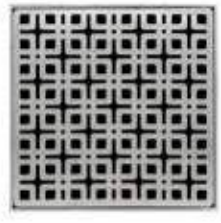

Description	Drain Body	Finish	Model	Lbs	List
T TRADITIONAL WATERPROOFING **5" x 5" KD 5 Kit with Drain Body 2" Outlet. Kit Includes:** 1 - KS 5 5" x 5" Decorative Plate 1 - T 52 2" Throat 1 - DKEY Lift-Out Key 1 - HS 2 Hair Strainer 1 - CDI 22/CDIH 22/CDP 22/CDA 22 Drain Body	Cast Iron	Satin Stainless Polished Stainless Satin Bronze Oil Rubbed Bronze Matte Black	**KD 5-2I SS** **KD 5-2I PS** **KD 5-2I ORB** **KD 5-2I SB** **KD 5-2I BK**	5	$360 $445 $445 $445 $445
	Cast Iron (For Hot Mop)	Satin Stainless Polished Stainless Satin Bronze Oil Rubbed Bronze Matte Black	**KD 5-2H SS** **KD 5-2HPS** **KD 5-2H ORB** **KD 5-2H SB** **KD 5-2H BK**	5	$360 $445 $445 $445 $445
	ABS	Satin Stainless Polished Stainless Satin Bronze Oil Rubbed Bronze Matte Black	**KD 5-2A SS** **KD 5-2A PS** **KD 5-2A ORB** **KD 5-2A SB** **KD 5-2A BK**	2	$345 $430 $430 $430 $430
	PVC	Satin Stainless Polished Stainless Satin Bronze Oil Rubbed Bronze Matte Black	**KD 5-2P SS** **KD 5-2P PS** **KD 5-2P ORB** **KD 5-2P SB** **KD 5-2P BK**	2	$345 $430 $430 $430 $430

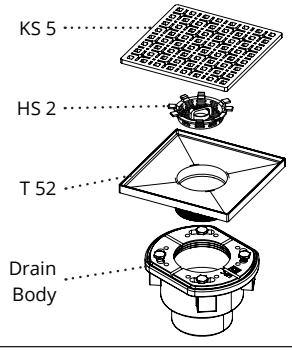

Description	Bonded Flange	Finish	Model	Lbs	List
L/F LIQUID/FABRIC WATERPROOFING **5" x 5" KD 5 Kit with Bonded Flange 2", 3", and 4" Outlet. Kit Includes:** 1 - KS 5 5" x 5" Decorative Plate 1 - T 52 2" Throat 1 - DKEY Lift-Out Key 1 - HS 2 Hair Strainer 1 - BFP 22/ BFA 22/ BFS 22 Bonded Flange	PVC	Satin Stainless Polished Stainless Satin Bronze Oil Rubbed Bronze Matte Black	**KDB 5-P SS** **KDB 5-P PS** **KDB 5-P ORB** **KDB 5-P SB** **KDB 5-P BK**	2	$395 $480 $480 $480 $480
	ABS	Satin Stainless Polished Stainless Satin Bronze Oil Rubbed Bronze Matte Black	**KDB 5-A SS** **KDB 5-A PS** **KDB 5-A ORB** **KDB 5-A SB** **KDB 5-A BK**	2	$395 $480 $480 $480 $480
	Stainless Steel	Satin Stainless Polished Stainless Satin Bronze Oil Rubbed Bronze Matte Black	**KDB 5-S SS** **KDB 5-S PS** **KDB 5-S ORB** **KDB 5-S SB** **KDB 5-S BK**	4	$490 $575 $575 $575 $575

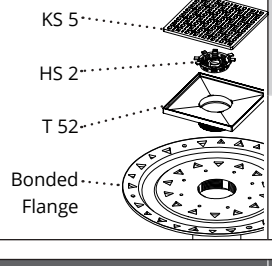

Description	Drain Body	Finish	Model	Lbs	List
HIGH FLOW **5" x 5" KD 5 Kit with HIGH FLOW Drain Body 3" Outlet. Kit Includes:** 1 - KS 5 5" x 5" Decorative Plate 1 - T 54 4" Throat (High Flow) 1 - DKEY Lift-Out Key 1 - HS 4 Hair Strainer 1 - CDI/ CDA/ CDP 43 Drain Body	Cast Iron**	Satin Stainless Polished Stainless Satin Bronze Oil Rubbed Bronze Matte Black	KD 5-3I SS KD 5-3I PS KD 5-3I ORB KD 5-3I SB KD 5-3I BK	22	$415 $500 $500 $500 $500

**If ABS or PVC drain body desired, replace I with A or P in model number (Example: QD 5-3A SS)

*See page 169 for more information on flow rates. • See page 130 for individual components. • See page 210-211 for shipping information.

RKD 5 - Link

5" Round Center Drain

Specifications	
Decorative Plate Material:	7 Ga. 304L Stainless Steel
Throat Material:	304L Stainless Steel
Flow Rate:	9 GPM Standard 21 GPM High Flow

Description	Finish	Model	Lbs	List
5" x 5" 304L Stainless Steel Strainer with 2" Throat: 1 - RKS 5 5" Round Decorative Plate 1 - R 52 2" Throat 1 - DKEY Lift-Out Key 1 - HS 2 Hair Strainer	Satin Stainless Polished Stainless Satin Bronze Oil Rubbed Bronze Matte Black	**RK 5-SS** **RK 5-PS** **RK 5-ORB** **RK 5-SB** **RK 5-BK**	1	$295 $380 $380 $380 $380

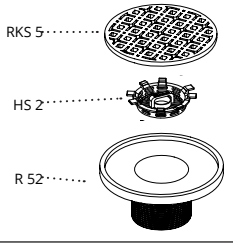

Description	Drain Body	Finish	Model	Lbs	List
T TRADITIONAL WATERPROOFING **5" x 5" RKD 5 Kit with Drain Body 2" Outlet. Kit Includes:** 1 - RKS 5 5" Round Decorative Plate 1 - R 52 2" Throat 1 - DKEY Lift-Out Key 1 - HS 2 Hair Strainer 1 - CDI 22/CDIH 22/CDP 22/CDA 22 Drain Body	Cast Iron	Satin Stainless Polished Stainless Satin Bronze Oil Rubbed Bronze Matte Black	**RKD 5-2I SS** **RKD 5-2I PS** **RKD 5-2I ORB** **RKD 5-2I SB** **RKD 5-2I BK**	5	$360 $445 $445 $445 $445
	Cast Iron (For Hot Mop)	Satin Stainless Polished Stainless Satin Bronze Oil Rubbed Bronze Matte Black	**RKD 5-2H SS** **RKD 5-2HPS** **RKD 5-2H ORB** **RKD 5-2H SB** **RKD 5-2H BK**	5	$360 $445 $445 $445 $445
	ABS	Satin Stainless Polished Stainless Satin Bronze Oil Rubbed Bronze Matte Black	**RKD 5-2A SS** **RKD 5-2A PS** **RKD 5-2A ORB** **RKD 5-2A SB** **RKD 5-2A BK**	2	$345 $430 $430 $430 $430
	PVC	Satin Stainless Polished Stainless Satin Bronze Oil Rubbed Bronze Matte Black	**RKD 5-2P SS** **RKD 5-2P PS** **RKD 5-2P ORB** **RKD 5-2P SB** **RKD 5-2P BK**	2	$345 $430 $430 $430 $430

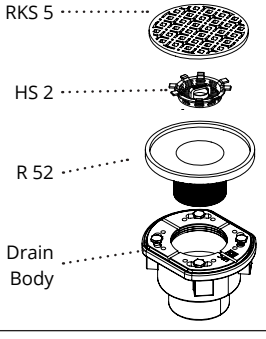

Description	Bonded Flange	Finish	Model	Lbs	List
L/F LIQUID/FABRIC WATERPROOFING **5" x 5" RKD 5 Kit with Bonded Flange 2", 3", and 4" Outlet. Kit Includes:** 1 - RKS 5 5" Round Decorative Plate 1 - R 52 2" Throat 1 - DKEY Lift-Out Key 1 - HS 2 Hair Strainer 1 - BFP 22/ BFA 22/ BFS 22 Bonded Flange	PVC	Satin Stainless Polished Stainless Satin Bronze Oil Rubbed Bronze Matte Black	**RKDB 5-P SS** **RKDB 5-P PS** **RKDB 5-P ORB** **RKDB 5-P SB** **RKDB 5-P BK**	2	$395 $480 $480 $480 $480
	ABS	Satin Stainless Polished Stainless Satin Bronze Oil Rubbed Bronze Matte Black	**RKDB 5-A SS** **RKDB 5-A PS** **RKDB 5-A ORB** **RKDB 5-A SB** **RKDB 5-A BK**	2	$395 $480 $480 $480 $480
	Stainless Steel	Satin Stainless Polished Stainless Satin Bronze Oil Rubbed Bronze Matte Black	**RKDB 5-S SS** **RKDB 5-S PS** **RKDB 5-S ORB** **RKDB 5-S SB** **RKDB 5-S BK**	4	$490 $575 $575 $575 $575

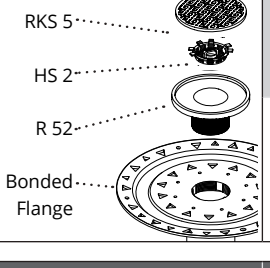

Description	Drain Body	Finish	Model	Lbs	List
HIGH FLOW **5" x 5" RKD 5 Kit with HIGH FLOW Drain Body 3" Outlet. Kit Includes:** 1 - RKS 5 5" Round Decorative Plate 1 - R 54 4" Throat (High Flow) 1 - DKEY Lift-Out Key 1 - HS 4 Hair Strainer 1 - CDI/ CDA/ CDP 43 Drain Body	Cast Iron**	Satin Stainless Polished Stainless Satin Bronze Oil Rubbed Bronze Matte Black	RKD 5-3I SS RKD 5-3I PS RKD 5-3I ORB RKD 5-3I SB RKD 5-3I BK	22	$415 $500 $500 $500 $500

**If ABS or PVC drain body desired, replace I with A or P in model number (Example: QD 5-3A SS)

*See page 169 for more information on flow rates. • See page 131 for individual components. • See page 218 for shipping information.

Specifications	
Decorative Plate Material:	7 Ga. 304L Stainless Steel
Throat Material:	304L Stainless Steel
Flow Rate:	9 GPM Standard 21 GPM High Flow

RVD 5 - Weave

5" Round Center Drain

Description	Finish	Model	Lbs	List
5" x 5" 304L Stainless Steel Strainer with 2" Throat: 1 - RVS 5 5" Round Decorative Plate 1 - R 52 2" Throat 1 - DKEY Lift-Out Key 1 - HS 2 Hair Strainer	Satin Stainless Polished Stainless Satin Bronze Oil Rubbed Bronze Matte Black	**RV 5-SS** **RV 5-PS** **RV 5-ORB** **RV 5-SB** **RV 5-BK**	1	$295 $380 $380 $380 $380

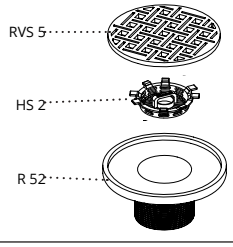

Description	Drain Body	Finish	Model	Lbs	List
T TRADITIONAL WATERPROOFING **5" x 5" RVD 5 Kit with Drain Body 2" Outlet. Kit Includes:** 1 - RVS 5 5" Round Decorative Plate 1 - R 52 2" Throat 1 - DKEY Lift-Out Key 1 - HS 2 Hair Strainer 1 - CDI 22/CDIH 22/CDP 22/CDA 22 Drain Body	Cast Iron	Satin Stainless Polished Stainless Satin Bronze Oil Rubbed Bronze Matte Black	**RVD 5-2I SS** **RVD 5-2I PS** **RVD 5-2I ORB** **RVD 5-2I SB** **RVD 5-2I BK**	5	$360 $445 $445 $445 $445
	Cast Iron (For Hot Mop)	Satin Stainless Polished Stainless Satin Bronze Oil Rubbed Bronze Matte Black	**RVD 5-2H SS** **RVD 5-2HPS** **RVD 5-2H ORB** **RVD 5-2H SB** **RVD 5-2H BK**	5	$360 $445 $445 $445 $445
	ABS	Satin Stainless Polished Stainless Satin Bronze Oil Rubbed Bronze Matte Black	**RVD 5-2A SS** **RVD 5-2A PS** **RVD 5-2A ORB** **RVD 5-2A SB** **RVD 5-2A BK**	2	$345 $430 $430 $430 $430
	PVC	Satin Stainless Polished Stainless Satin Bronze Oil Rubbed Bronze Matte Black	**RVD 5-2P SS** **RVD 5-2P PS** **RVD 5-2P ORB** **RVD 5-2P SB** **RVD 5-2P BK**	2	$345 $430 $430 $430 $430

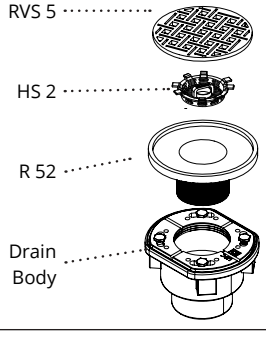

Description	Bonded Flange	Finish	Model	Lbs	List
L/F LIQUID/FABRIC WATERPROOFING **5" x 5" RVD 5 Kit with Bonded Flange 2", 3", and 4" Outlet. Kit Includes:** 1 - RVS 5 5" Round Decorative Plate 1 - R 52 2" Throat 1 - DKEY Lift-Out Key 1 - HS 2 Hair Strainer 1 - BFP 22/ BFA 22/ BFS 22 Bonded Flange	PVC	Satin Stainless Polished Stainless Satin Bronze Oil Rubbed Bronze Matte Black	**RVDB 5-P SS** **RVDB 5-P PS** **RVDB 5-P ORB** **RVDB 5-P SB** **RVDB 5-P BK**	2	$395 $480 $480 $480 $480
	ABS	Satin Stainless Polished Stainless Satin Bronze Oil Rubbed Bronze Matte Black	**RVDB 5-A SS** **RVDB 5-A PS** **RVDB 5-A ORB** **RVDB 5-A SB** **RVDB 5-A BK**	2	$395 $480 $480 $480 $480
	Stainless Steel	Satin Stainless Polished Stainless Satin Bronze Oil Rubbed Bronze Matte Black	**RVDB 5-S SS** **RVDB 5-S PS** **RVDB 5-S ORB** **RVDB 5-S SB** **RVDB 5-S BK**	4	$490 $575 $575 $575 $575

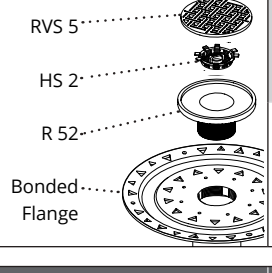

Description	Drain Body	Finish	Model	Lbs	List
HIGH FLOW **5" x 5" RVD 5 Kit with HIGH FLOW Drain Body 3" Outlet. Kit Includes:** 1 - RVS 5 5" Round Decorative Plate 1 - R 54 4" Throat (High Flow) 1 - DKEY Lift-Out Key 1 - HS 4 Hair Strainer 1 - CDI/ CDA/ CDP 43 Drain Body	Cast Iron**	Satin Stainless Polished Stainless Satin Bronze Oil Rubbed Bronze Matte Black	RVD 5-3I SS RVD 5-3I PS RVD 5-3I ORB RVD 5-3I SB RVD 5-3I BK	22	$415 $500 $500 $500 $500

**If ABS or PVC drain body desired, replace I with A or P in model number (Example: QD 5-3A SS)

*See page 169 for more information on flow rates. • See page 131 for individual components. • See page 221-222 for shipping information.

VD 4 - Weave

4"x4" Center Drain

Specifications	
Decorative Plate Material:	7 Ga. 304L Stainless Steel
Throat Material:	304L Stainless Steel
Flow Rate:	9 GPM Standard 21 GPM High Flow

Description	Finish	Model	Lbs	List
4" x 4" 304L Stainless Steel Strainer with 2" Throat: 1 - VS 4 4" x 4" Decorative Plate 1 - T 42 2" Throat 1 - DKEY Lift-Out Key 1 - HS 2 Hair Strainer	Satin Stainless Polished Stainless Satin Bronze Oil Rubbed Bronze Matte Black	**V 4-SS** **V 4-PS** **V 4-ORB** **V 4-SB** **V 4-BK**	1	$265 $345 $345 $345 $345

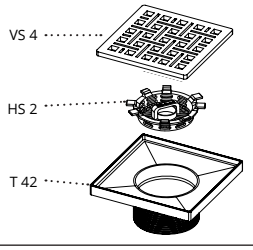

Description	Drain Body	Finish	Model	Lbs	List
T TRADITIONAL WATERPROOFING **4" x 4" VD 4 Kit with Drain Body 2" Outlet. Kit Includes:** 1 - VS 4 4" x 4" Decorative Plate 1 - T 42 2" Throat 1 - DKEY Lift-Out Key 1 - HS 2 Hair Strainer 1 - CDI 22/CDIH 22/CDP 22/CDA 22 Drain Body	Cast Iron	Satin Stainless Polished Stainless Satin Bronze Oil Rubbed Bronze Matte Black	**VD 4-2I SS** **VD 4-2I PS** **VD 4-2I ORB** **VD 4-2I SB** **VD 4-2I BK**	5	$330 $410 $410 $410 $410
	Cast Iron (For Hot Mop)	Satin Stainless Polished Stainless Satin Bronze Oil Rubbed Bronze Matte Black	**VD 4-2H SS** **VD 4-2HPS** **VD 4-2H ORB** **VD 4-2H SB** **VD 4-2H BK**	5	$330 $410 $410 $410 $410
	ABS	Satin Stainless Polished Stainless Satin Bronze Oil Rubbed Bronze Matte Black	**VD 4-2A SS** **VD 4-2A PS** **VD 4-2A ORB** **VD 4-2A SB** **VD 4-2A BK**	2	$315 $395 $395 $395 $395
	PVC	Satin Stainless Polished Stainless Satin Bronze Oil Rubbed Bronze Matte Black	**VD 4-2P SS** **VD 4-2P PS** **VD 4-2P ORB** **VD 4-2P SB** **VD 4-2P BK**	2	$315 $395 $395 $395 $395

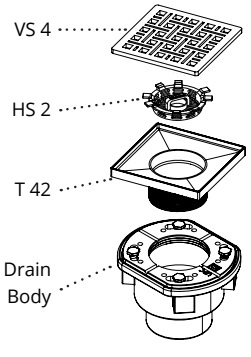

Description	Bonded Flange	Finish	Model	Lbs	List
L/F LIQUID/FABRIC WATERPROOFING **4" x 4" VD 4 Kit with Bonded Flange 2", 3", and 4" Outlet. Kit Includes:** 1 - VS 4 4" x 4" Decorative Plate 1 - T 42 2" Throat 1 - DKEY Lift-Out Key 1 - HS 2 Hair Strainer 1 - BFP 22/ BFA 22/ BFS 22 Bonded Flange	PVC	Satin Stainless Polished Stainless Satin Bronze Oil Rubbed Bronze Matte Black	**VDB 4-P SS** **VDB 4-P PS** **VDB 4-P ORB** **VDB 4-P SB** **VDB 4-P BK**	2	$365 $445 $445 $445 $445
	ABS	Satin Stainless Polished Stainless Satin Bronze Oil Rubbed Bronze Matte Black	**VDB 4-A SS** **VDB 4-A PS** **VDB 4-A ORB** **VDB 4-A SB** **VDB 4-A BK**	2	$365 $445 $445 $445 $445
	Stainless Steel	Satin Stainless Polished Stainless Satin Bronze Oil Rubbed Bronze Matte Black	**VDB 4-S SS** **VDB 4-S PS** **VDB 4-S ORB** **VDB 4-S SB** **VDB 4-S BK**	4	$460 $540 $540 $540 $540

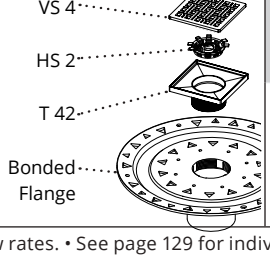

*See page 169 for more information on flow rates. • See page 129 for individual components. • See page 234-235 for shipping information.

Specifications	
Decorative Plate Material:	7 Ga. 304L Stainless Steel
Throat Material:	304L Stainless Steel
Flow Rate:	9 GPM Standard 21 GPM High Flow

VD 5 - Weave

5"x5" Center Drain

Description	Finish	Model	Lbs	List
5" x 5" 304L Stainless Steel Strainer with 2" Throat: 1 - VS 5 5" x 5" Decorative Plate 1 - T 52 2" Throat 1 - DKEY Lift-Out Key 1 - HS 2 Hair Strainer	Satin Stainless Polished Stainless Satin Bronze Oil Rubbed Bronze Matte Black	**V 5-SS** **V 5-PS** **V 5-ORB** **V 5-SB** **V 5-BK**	1	$295 $380 $380 $380 $380

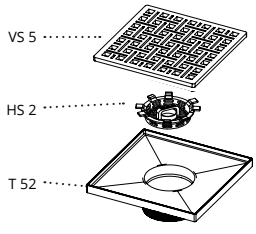

Description	Drain Body	Finish	Model	Lbs	List
T TRADITIONAL WATERPROOFING **5" x 5" VD 5 Kit with Drain Body 2" Outlet. Kit Includes:** 1 - VS 5 5" x 5" Decorative Plate 1 - T 52 2" Throat 1 - DKEY Lift-Out Key 1 - HS 2 Hair Strainer 1 - CDI 22/CDIH 22/CDP 22/CDA 22 Drain Body	Cast Iron	Satin Stainless Polished Stainless Satin Bronze Oil Rubbed Bronze Matte Black	**VD 5-2I SS** **VD 5-2I PS** **VD 5-2I ORB** **VD 5-2I SB** **VD 5-2I BK**	5	$360 $445 $445 $445 $445
	Cast Iron (For Hot Mop)	Satin Stainless Polished Stainless Satin Bronze Oil Rubbed Bronze Matte Black	**VD 5-2H SS** **VD 5-2HPS** **VD 5-2H ORB** **VD 5-2H SB** **VD 5-2H BK**	5	$360 $445 $445 $445 $445
	ABS	Satin Stainless Polished Stainless Satin Bronze Oil Rubbed Bronze Matte Black	**VD 5-2A SS** **VD 5-2A PS** **VD 5-2A ORB** **VD 5-2A SB** **VD 5-2A BK**	2	$345 $430 $430 $430 $430
	PVC	Satin Stainless Polished Stainless Satin Bronze Oil Rubbed Bronze Matte Black	**VD 5-2P SS** **VD 5-2P PS** **VD 5-2P ORB** **VD 5-2P SB** **VD 5-2P BK**	2	$345 $430 $430 $430 $430

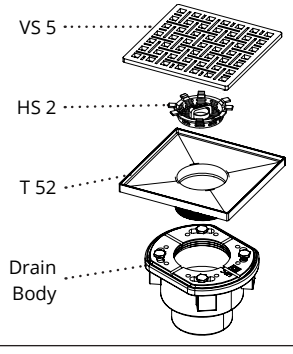

Description	Bonded Flange	Finish	Model	Lbs	List
L/F LIQUID/FABRIC WATERPROOFING **5" x 5" VD 5 Kit with Bonded Flange 2", 3", and 4" Outlet. Kit Includes:** 1 - VS 5 5" x 5" Decorative Plate 1 - T 52 2" Throat 1 - DKEY Lift-Out Key 1 - HS 2 Hair Strainer 1 - BFP 22/ BFA 22/ BFS 22 Bonded Flange	PVC	Satin Stainless Polished Stainless Satin Bronze Oil Rubbed Bronze Matte Black	**VDB 5-P SS** **VDB 5-P PS** **VDB 5-P ORB** **VDB 5-P SB** **VDB 5-P BK**	2	$395 $480 $480 $480 $480
	ABS	Satin Stainless Polished Stainless Satin Bronze Oil Rubbed Bronze Matte Black	**VDB 5-A SS** **VDB 5-A PS** **VDB 5-A ORB** **VDB 5-A SB** **VDB 5-A BK**	2	$395 $480 $480 $480 $480
	Stainless Steel	Satin Stainless Polished Stainless Satin Bronze Oil Rubbed Bronze Matte Black	**VDB 5-S SS** **VDB 5-S PS** **VDB 5-S ORB** **VDB 5-S SB** **VDB 5-S BK**	4	$490 $575 $575 $575 $575

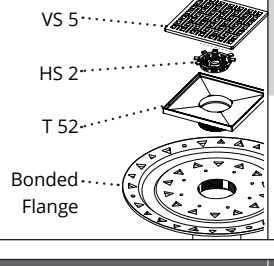

Description	Drain Body	Finish	Model	Lbs	List
HIGH FLOW **5" x 5" VD 5 Kit with HIGH FLOW Drain Body 3" Outlet. Kit Includes:** 1 - VS 5 5" x 5" Decorative Plate 1 - T 54 4" Throat (High Flow) 1 - DKEY Lift-Out Key 1 - HS 4 Hair Strainer 1 - CDI/ CDA/ CDP 43 Drain Body	Cast Iron**	Satin Stainless Polished Stainless Satin Bronze Oil Rubbed Bronze Matte Black	VD 5-3I SS VD 5-3I PS VD 5-3I ORB VD 5-3I SB VD 5-3I BK	22	$415 $500 $500 $500 $500

**If ABS or PVC drain body desired, replace I with A or P in model number (Example: QD 5-3A SS)

*See page 169 for more information on flow rates. • See page 130 for individual components. • See page 234-235 for shipping information.

ND 4 - Lines

4"x4" Center Drain

Specifications	
Decorative Plate Material:	7 Ga. 304L Stainless Steel
Throat Material:	304L Stainless Steel
Flow Rate:	9 GPM Standard 21 GPM High Flow

Description	Finish	Model	Lbs	List
4" x 4" 304L Stainless Steel Strainer with 2" Throat: 1 - NS 4 4" x 4" Decorative Plate 1 - T 42 2" Throat 1 - DKEY Lift-Out Key 1 - HS 2 Hair Strainer	Satin Stainless Polished Stainless Satin Bronze Oil Rubbed Bronze Matte Black	**N 4-SS** **N 4-PS** **N 4-ORB** **N 4-SB** **N 4-BK**	1	$265 $345 $345 $345 $345

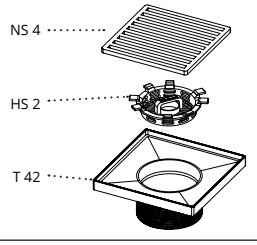

Description	Drain Body	Finish	Model	Lbs	List
T TRADITIONAL WATERPROOFING **4" x 4" ND 4 Kit with Drain Body 2" Outlet. Kit Includes:** 1 - NS 4 4" x 4" Decorative Plate 1 - T 42 2" Throat 1 - DKEY Lift-Out Key 1 - HS 2 Hair Strainer 1 - CDI 22/CDIH 22/CDP 22/CDA 22 Drain Body	Cast Iron	Satin Stainless Polished Stainless Satin Bronze Oil Rubbed Bronze Matte Black	**ND 4-2I SS** **ND 4-2I PS** **ND 4-2I ORB** **ND 4-2I SB** **ND 4-2I BK**	5	$330 $410 $410 $410 $410
	Cast Iron (For Hot Mop)	Satin Stainless Polished Stainless Satin Bronze Oil Rubbed Bronze Matte Black	**ND 4-2H SS** **ND 4-2HPS** **ND 4-2H ORB** **ND 4-2H SB** **ND 4-2H BK**	5	$330 $410 $410 $410 $410
	ABS	Satin Stainless Polished Stainless Satin Bronze Oil Rubbed Bronze Matte Black	**ND 4-2A SS** **ND 4-2A PS** **ND 4-2A ORB** **ND 4-2A SB** **ND 4-2A BK**	2	$315 $395 $395 $395 $395
	PVC	Satin Stainless Polished Stainless Satin Bronze Oil Rubbed Bronze Matte Black	**ND 4-2P SS** **ND 4-2P PS** **ND 4-2P ORB** **ND 4-2P SB** **ND 4-2P BK**	2	$315 $395 $395 $395 $395

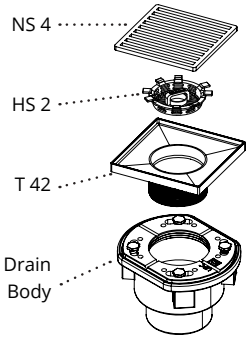

Description	Bonded Flange	Finish	Model	Lbs	List
L/F LIQUID/FABRIC WATERPROOFING **4" x 4" ND 4 Kit with Bonded Flange 2", 3", and 4" Outlet. Kit Includes:** 1 - NS 4 4" x 4" Decorative Plate 1 - T 42 2" Throat 1 - DKEY Lift-Out Key 1 - HS 2 Hair Strainer 1 - BFP 22/ BFA 22/ BFS 22 Bonded Flange	PVC	Satin Stainless Polished Stainless Satin Bronze Oil Rubbed Bronze Matte Black	**NDB 4-P SS** **NDB 4-P PS** **NDB 4-P ORB** **NDB 4-P SB** **NDB 4-P BK**	2	$365 $445 $445 $445 $445
	ABS	Satin Stainless Polished Stainless Satin Bronze Oil Rubbed Bronze Matte Black	**NDB 4-A SS** **NDB 4-A PS** **NDB 4-A ORB** **NDB 4-A SB** **NDB 4-A BK**	2	$365 $445 $445 $445 $445
	Stainless Steel	Satin Stainless Polished Stainless Satin Bronze Oil Rubbed Bronze Matte Black	**NDB 4-S SS** **NDB 4-S PS** **NDB 4-S ORB** **NDB 4-S SB** **NDB 4-S BK**	4	$460 $540 $540 $540 $540

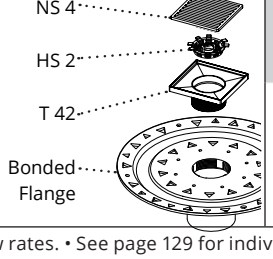

*See page 169 for more information on flow rates. • See page 129 for individual components. • See page 214-215 for shipping information.

Specifications	
Decorative Plate Material:	7 Ga. 304L Stainless Steel
Throat Material:	304L Stainless Steel
Flow Rate:	9 GPM Standard 21 GPM High Flow

ND 5 - Lines

5"x5" Center Drain

Description	Finish	Model	Lbs	List
5" x 5" 304L Stainless Steel Strainer with 2" Throat: 1 - NS 5 5" x 5" Decorative Plate 1 - T 52 2" Throat 1 - DKEY Lift-Out Key 1 - HS 2 Hair Strainer	Satin Stainless Polished Stainless Satin Bronze Oil Rubbed Bronze Matte Black	**N 5-SS** **N 5-PS** **N 5-ORB** **N 5-SB** **N 5-BK**	1	$295 $380 $380 $380 $380

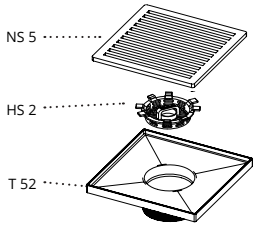

Description	Drain Body	Finish	Model	Lbs	List
T TRADITIONAL WATERPROOFING **5" x 5" ND 5 Kit with Drain Body 2" Outlet. Kit Includes:** 1 - NS 5 5" x 5" Decorative Plate 1 - T 52 2" Throat 1 - DKEY Lift-Out Key 1 - HS 2 Hair Strainer 1 - CDI 22/CDIH 22/CDP 22/CDA 22 Drain Body	Cast Iron	Satin Stainless Polished Stainless Satin Bronze Oil Rubbed Bronze Matte Black	**ND 5-2I SS** **ND 5-2I PS** **ND 5-2I ORB** **ND 5-2I SB** **ND 5-2I BK**	5	$360 $445 $445 $445 $445
	Cast Iron (For Hot Mop)	Satin Stainless Polished Stainless Satin Bronze Oil Rubbed Bronze Matte Black	**ND 5-2H SS** **ND 5-2HPS** **ND 5-2H ORB** **ND 5-2H SB** **ND 5-2H BK**	5	$360 $445 $445 $445 $445
	ABS	Satin Stainless Polished Stainless Satin Bronze Oil Rubbed Bronze Matte Black	**ND 5-2A SS** **ND 5-2A PS** **ND 5-2A ORB** **ND 5-2A SB** **ND 5-2A BK**	2	$345 $430 $430 $430 $430
	PVC	Satin Stainless Polished Stainless Satin Bronze Oil Rubbed Bronze Matte Black	**ND 5-2P SS** **ND 5-2P PS** **ND 5-2P ORB** **ND 5-2P SB** **ND 5-2P BK**	2	$345 $430 $430 $430 $430

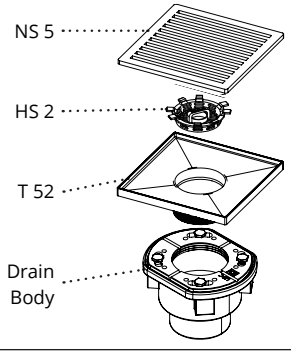

Description	Bonded Flange	Finish	Model	Lbs	List
L/F LIQUID/FABRIC WATERPROOFING **5" x 5" ND 5 Kit with Bonded Flange 2", 3", and 4" Outlet. Kit Includes:** 1 - NS 5 5" x 5" Decorative Plate 1 - T 52 2" Throat 1 - DKEY Lift-Out Key 1 - HS 2 Hair Strainer 1 - BFP 22/ BFA 22/ BFS 22 Bonded Flange	PVC	Satin Stainless Polished Stainless Satin Bronze Oil Rubbed Bronze Matte Black	**NDB 5-P SS** **NDB 5-P PS** **NDB 5-P ORB** **NDB 5-P SB** **NDB 5-P BK**	2	$395 $480 $480 $480 $480
	ABS	Satin Stainless Polished Stainless Satin Bronze Oil Rubbed Bronze Matte Black	**NDB 5-A SS** **NDB 5-A PS** **NDB 5-A ORB** **NDB 5-A SB** **NDB 5-A BK**	2	$395 $480 $480 $480 $480
	Stainless Steel	Satin Stainless Polished Stainless Satin Bronze Oil Rubbed Bronze Matte Black	**NDB 5-S SS** **NDB 5-S PS** **NDB 5-S ORB** **NDB 5-S SB** **NDB 5-S BK**	4	$490 $575 $575 $575 $575

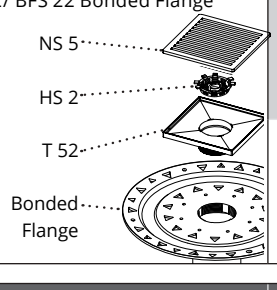

Description	Drain Body	Finish	Model	Lbs	List
HIGH FLOW **5" x 5" ND 5 Kit with HIGH FLOW Drain Body 3" Outlet. Kit Includes:** 1 - NS 5 5" x 5" Decorative Plate 1 - T 54 4" Throat (High Flow) 1 - DKEY Lift-Out Key 1 - HS 4 Hair Strainer 1 - CDI/ CDA/ CDP 43 Drain Body	Cast Iron**	Satin Stainless Polished Stainless Satin Bronze Oil Rubbed Bronze Matte Black	ND 5-3I SS ND 5-3I PS ND 5-3I ORB ND 5-3I SB ND 5-3I BK	22	$415 $500 $500 $500 $500

**If ABS or PVC drain body desired, replace I with A or P in model number (Example: QD 5-3A SS)

*See page 169 for more information on flow rates. • See page 130 for individual components. • See page 214-215 for shipping information.

RND 5 - Lines

5" Round Center Drain

Specifications	
Decorative Plate Material:	7 Ga. 304L Stainless Steel
Throat Material:	304L Stainless Steel
Flow Rate:	9 GPM Standard 21 GPM High Flow

Description	Finish	Model	Lbs	List
5" x 5" 304L Stainless Steel Strainer with 2" Throat: 1 - RNS 5 5" Round Decorative Plate 1 - R 52 2" Throat 1 - DKEY Lift-Out Key 1 - HS 2 Hair Strainer	Satin Stainless Polished Stainless Satin Bronze Oil Rubbed Bronze Matte Black	**RN 5-SS** **RN 5-PS** **RN 5-ORB** **RN 5-SB** **RN 5-BK**	1	$295 $380 $380 $380 $380

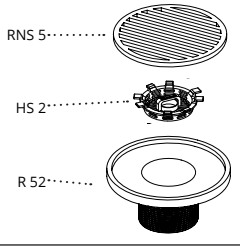

Description	Drain Body	Finish	Model	Lbs	List
T TRADITIONAL WATERPROOFING **5" x 5" RND 5 Kit with Drain Body 2" Outlet. Kit Includes:** 1 - RNS 5 5" Round Decorative Plate 1 - R 52 2" Throat 1 - DKEY Lift-Out Key 1 - HS 2 Hair Strainer 1 - CDI 22/CDIH 22/CDP 22/CDA 22 Drain Body	Cast Iron	Satin Stainless Polished Stainless Satin Bronze Oil Rubbed Bronze Matte Black	**RND 5-2I SS** **RND 5-2I PS** **RND 5-2I ORB** **RND 5-2I SB** **RND 5-2I BK**	5	$360 $445 $445 $445 $445
	Cast Iron (For Hot Mop)	Satin Stainless Polished Stainless Satin Bronze Oil Rubbed Bronze Matte Black	**RND 5-2H SS** **RND 5-2HPS** **RND 5-2H ORB** **RND 5-2H SB** **RND 5-2H BK**	5	$360 $445 $445 $445 $445
	ABS	Satin Stainless Polished Stainless Satin Bronze Oil Rubbed Bronze Matte Black	**RND 5-2A SS** **RND 5-2A PS** **RND 5-2A ORB** **RND 5-2A SB** **RND 5-2A BK**	2	$345 $430 $430 $430 $430
	PVC	Satin Stainless Polished Stainless Satin Bronze Oil Rubbed Bronze Matte Black	**RND 5-2P SS** **RND 5-2P PS** **RND 5-2P ORB** **RND 5-2P SB** **RND 5-2P BK**	2	$345 $430 $430 $430 $430

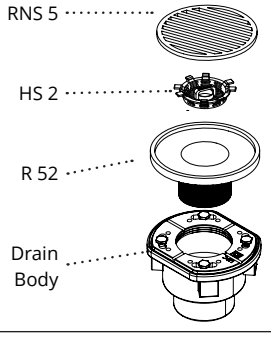

Description	Bonded Flange	Finish	Model	Lbs	List
L/F LIQUID/FABRIC WATERPROOFING **5" x 5" RND 5 Kit with Bonded Flange 2", 3", and 4" Outlet. Kit Includes:** 1 - RNS 5 5" Round Decorative Plate 1 - R 52 2" Throat 1 - DKEY Lift-Out Key 1 - HS 2 Hair Strainer 1 - BFP 22/ BFA 22/ BFS 22 Bonded Flange	PVC	Satin Stainless Polished Stainless Satin Bronze Oil Rubbed Bronze Matte Black	**RNDB 5-P SS** **RNDB 5-P PS** **RNDB 5-P ORB** **RNDB 5-P SB** **RNDB 5-P BK**	2	$395 $480 $480 $480 $480
	ABS	Satin Stainless Polished Stainless Satin Bronze Oil Rubbed Bronze Matte Black	**RNDB 5-A SS** **RNDB 5-A PS** **RNDB 5-A ORB** **RNDB 5-A SB** **RNDB 5-A BK**	2	$395 $480 $480 $480 $480
	Stainless Steel	Satin Stainless Polished Stainless Satin Bronze Oil Rubbed Bronze Matte Black	**RNDB 5-S SS** **RNDB 5-S PS** **RNDB 5-S ORB** **RNDB 5-S SB** **RNDB 5-S BK**	4	$490 $575 $575 $575 $575

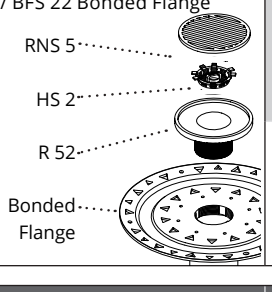

Description	Drain Body	Finish	Model	Lbs	List
HIGH FLOW **5" x 5" RND 5 Kit with HIGH FLOW Drain Body 3" Outlet. Kit Includes:** 1 - RNS 5 5" Round Decorative Plate 1 - R 54 4" Throat (High Flow) 1 - DKEY Lift-Out Key 1 - HS 4 Hair Strainer 1 - CDI/ CDA/ CDP 43 Drain Body	Cast Iron**	Satin Stainless Polished Stainless Satin Bronze Oil Rubbed Bronze Matte Black	RND 5-3I SS RND 5-3I PS RND 5-3I ORB RND 5-3I SB RND 5-3I BK	22	$415 $500 $500 $500 $500

**If ABS or PVC drain body desired, replace I with A or P in model number (Example: QD 5-3A SS)

*See page 169 for more information on flow rates. • See page 131 for individual components. • See page 219-220 for shipping information.

Specifications	
Decorative Plate Material:	316L Stainless Steel Wedge Wire
Throat Material:	304L Stainless Steel
Flow Rate:	9 GPM Standard 21 GPM High Flow

RWD 5 - Wedge Wire

5" Round Center Drain

Description	Finish	Model	Lbs	List
5" x 5" 304L Stainless Steel Strainer with 2" Throat: 1 - RWS 5 5" Round Decorative Plate 1 - R 52 2" Throat 1 - WKEY Lift-Out Key 1 - HS 2 Hair Strainer	Satin Stainless Polished Stainless Satin Bronze Oil Rubbed Bronze Matte Black	**RW 5-SS** **RW 5-PS** **RW 5-ORB** **RW 5-SB** **RW 5-BK**	1	$345 $425 $425 $425 $425

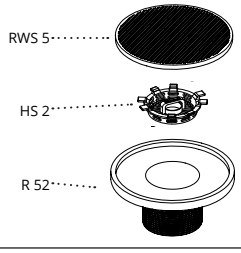

	Description	Drain Body	Finish	Model	Lbs	List
T TRADITIONAL WATERPROOFING	**5" x 5" RWD 5 Kit with Drain Body 2" Outlet. Kit Includes:** 1 - RWS 5 5" Round Decorative Plate 1 - R 52 2" Throat 1 - WKEY Lift-Out Key 1 - HS 2 Hair Strainer 1 - CDI 22/CDIH 22/CDP 22/CDA 22 Drain Body	Cast Iron	Satin Stainless Polished Stainless Satin Bronze Oil Rubbed Bronze Matte Black	**RWD 5-2I SS** **RWD 5-2I PS** **RWD 5-2I ORB** **RWD 5-2I SB** **RWD 5-2I BK**	5	$410 $490 $490 $490 $490
		Cast Iron (For Hot Mop)	Satin Stainless Polished Stainless Satin Bronze Oil Rubbed Bronze Matte Black	**RWD 5-2H SS** **RWD 5-2HPS** **RWD 5-2H ORB** **RWD 5-2H SB** **RWD 5-2H BK**	5	$410 $490 $490 $490 $490
		ABS	Satin Stainless Polished Stainless Satin Bronze Oil Rubbed Bronze Matte Black	**RWD 5-2A SS** **RWD 5-2A PS** **RWD 5-2A ORB** **RWD 5-2A SB** **RWD 5-2A BK**	2	$395 $475 $475 $475 $475
		PVC	Satin Stainless Polished Stainless Satin Bronze Oil Rubbed Bronze Matte Black	**RWD 5-2P SS** **RWD 5-2P PS** **RWD 5-2P ORB** **RWD 5-2P SB** **RWD 5-2P BK**	2	$395 $475 $475 $475 $475

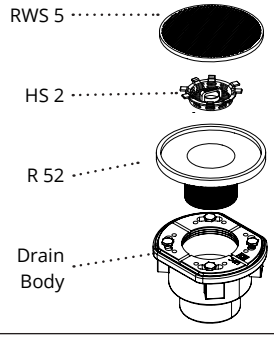

	Description	Bonded Flange	Finish	Model	Lbs	List
L/F LIQUID/FABRIC WATERPROOFING	**5" x 5" RWD 5 Kit with Bonded Flange 2", 3", and 4" Outlet. Kit Includes:** 1 - RWS 5 5" Round Decorative Plate 1 - R 52 2" Throat 1 - WKEY Lift-Out Key 1 - HS 2 Hair Strainer 1 - BFP 22/ BFA 22/ BFS 22 Bonded Flange	PVC	Satin Stainless Polished Stainless Satin Bronze Oil Rubbed Bronze Matte Black	**RWDB 5-P SS** **RWDB 5-P PS** **RWDB 5-P ORB** **RWDB 5-P SB** **RWDB 5-P BK**	2	$445 $525 $525 $525 $525
		ABS	Satin Stainless Polished Stainless Satin Bronze Oil Rubbed Bronze Matte Black	**RWDB 5-A SS** **RWDB 5-A PS** **RWDB 5-A ORB** **RWDB 5-A SB** **RWDB 5-A BK**	2	$445 $525 $525 $525 $525
		Stainless Steel	Satin Stainless Polished Stainless Satin Bronze Oil Rubbed Bronze Matte Black	**RWDB 5-S SS** **RWDB 5-S PS** **RWDB 5-S ORB** **RWDB 5-S SB** **RWDB 5-S BK**	4	$540 $620 $620 $620 $620

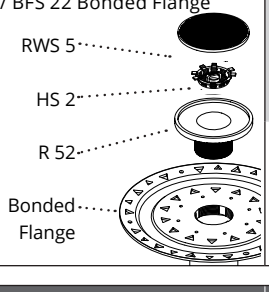

	Description	Drain Body	Finish	Model	Lbs	List
HIGH FLOW	**5" x 5" RWD 5 Kit with HIGH FLOW Drain Body 3" Outlet. Kit Includes:** 1 - RWS 5 5" Round Decorative Plate 1 - R 54 4" Throat (High Flow) 1 - WKEY Lift-Out Key 1 - HS 4 Hair Strainer 1 - CDI/ CDA/ CDP 43 Drain Body	Cast Iron**	Satin Stainless Polished Stainless Satin Bronze Oil Rubbed Bronze Matte Black	RWD 5-3I SS RWD 5-3I PS RWD 5-3I ORB RWD 5-3I SB RWD 5-3I BK	22	$465 $545 $545 $545 $545

**If ABS or PVC drain body desired, replace I with A or P in model number (Example: QD 5-3A SS)

*See page 169 for more information on flow rates. • See page 131 for individual components. • See page 222 for shipping information.

WD 4 - Wedge Wire

4"x4" Center Drain

Specifications	
Decorative Plate Material:	316L Stainless Steel Wedge Wire
Throat Material:	304L Stainless Steel
Flow Rate:	9 GPM Standard 21 GPM High Flow

Description	Finish	Model	Lbs	List
4" x 4" 304L Stainless Steel Strainer with 2" Throat: 1 - WS 4 4" x 4" Decorative Plate 1 - T 42 2" Throat 1 - WKEY Lift-Out Key 1 - HS 2 Hair Strainer	Satin Stainless Polished Stainless Satin Bronze Oil Rubbed Bronze Matte Black	**W 4-SS** **W 4-PS** **W 4-ORB** **W 4-SB** **W 4-BK**	1	$330 $425 $425 $425 $425

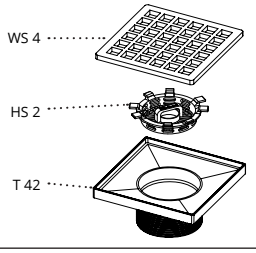

Description	Drain Body	Finish	Model	Lbs	List
T TRADITIONAL WATERPROOFING **4" x 4" WD 4 Kit with Drain Body 2" Outlet. Kit Includes:** 1 - WS 4 4" x 4" Decorative Plate 1 - T 42 2" Throat 1 - WKEY Lift-Out Key 1 - HS 2 Hair Strainer 1 - CDI 22/CDIH 22/CDP 22/CDA 22 Drain Body	Cast Iron	Satin Stainless Polished Stainless Satin Bronze Oil Rubbed Bronze Matte Black	**WD 4-2I SS** **WD 4-2I PS** **WD 4-2I ORB** **WD 4-2I SB** **WD 4-2I BK**	5	$395 $490 $490 $490 $490
	Cast Iron (For Hot Mop)	Satin Stainless Polished Stainless Satin Bronze Oil Rubbed Bronze Matte Black	**WD 4-2H SS** **WD 4-2HPS** **WD 4-2H ORB** **WD 4-2H SB** **WD 4-2H BK**	5	$395 $490 $490 $490 $490
	ABS	Satin Stainless Polished Stainless Satin Bronze Oil Rubbed Bronze Matte Black	**WD 4-2A SS** **WD 4-2A PS** **WD 4-2A ORB** **WD 4-2A SB** **WD 4-2A BK**	2	$380 $475 $475 $475 $475
	PVC	Satin Stainless Polished Stainless Satin Bronze Oil Rubbed Bronze Matte Black	**WD 4-2P SS** **WD 4-2P PS** **WD 4-2P ORB** **WD 4-2P SB** **WD 4-2P BK**	2	$380 $475 $475 $475 $475

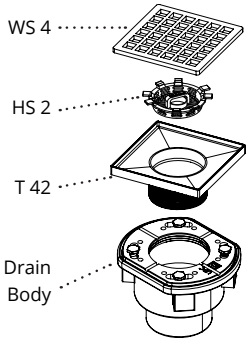

Description	Bonded Flange	Finish	Model	Lbs	List
L/F LIQUID/FABRIC WATERPROOFING **4" x 4" WD 4 Kit with Bonded Flange 2", 3", and 4" Outlet. Kit Includes:** 1 - WS 4 4" x 4" Decorative Plate 1 - T 42 2" Throat 1 - WKEY Lift-Out Key 1 - HS 2 Hair Strainer 1 - BFP 22/ BFA 22/ BFS 22 Bonded Flange	PVC	Satin Stainless Polished Stainless Satin Bronze Oil Rubbed Bronze Matte Black	**WDB 4-P SS** **WDB 4-P PS** **WDB 4-P ORB** **WDB 4-P SB** **WDB 4-P BK**	2	$430 $525 $525 $525 $525
	ABS	Satin Stainless Polished Stainless Satin Bronze Oil Rubbed Bronze Matte Black	**WDB 4-A SS** **WDB 4-A PS** **WDB 4-A ORB** **WDB 4-A SB** **WDB 4-A BK**	2	$430 $525 $525 $525 $525
	Stainless Steel	Satin Stainless Polished Stainless Satin Bronze Oil Rubbed Bronze Matte Black	**WDB 4-S SS** **WDB 4-S PS** **WDB 4-S ORB** **WDB 4-S SB** **WDB 4-S BK**	4	$525 $620 $620 $620 $620

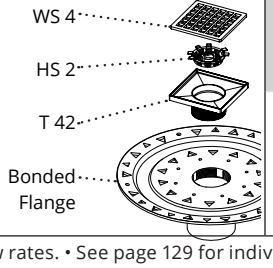

*See page 169 for more information on flow rates. • See page 129 for individual components. • See page 235-237 for shipping information.

Specifications	
Decorative Plate Material:	316L Stainless Steel Wedge Wire
Throat Material:	304L Stainless Steel
Flow Rate:	9 GPM Standard 21 GPM High Flow

WD 5 - Wedge Wire

5"x5" Center Drain

Description	Finish	Model	Lbs	List
5" x 5" 304L Stainless Steel Strainer with 2" Throat: 1 - WS 5 5" x 5" Decorative Plate 1 - T 52 2" Throat 1 - WKEY Lift-Out Key 1 - HS 2 Hair Strainer	Satin Stainless Polished Stainless Satin Bronze Oil Rubbed Bronze Matte Black	**W 5-SS** **W 5-PS** **W 5-ORB** **W 5-SB** **W 5-BK**	1	$370 $450 $450 $450 $450

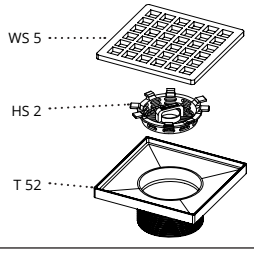

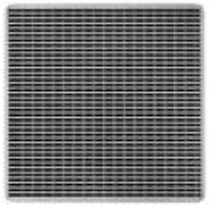

Description	Drain Body	Finish	Model	Lbs	List
T TRADITIONAL WATERPROOFING **5" x 5" WD 5 Kit with Drain Body 2" Outlet. Kit Includes:** 1 - WS 5 5" x 5" Decorative Plate 1 - T 52 2" Throat 1 - WKEY Lift-Out Key 1 - HS 2 Hair Strainer 1 - CDI 22/CDIH 22/CDP 22/CDA 22 Drain Body	Cast Iron	Satin Stainless Polished Stainless Satin Bronze Oil Rubbed Bronze Matte Black	**WD 5-2I SS** **WD 5-2I PS** **WD 5-2I ORB** **WD 5-2I SB** **WD 5-2I BK**	5	$435 $515 $515 $515 $515
	Cast Iron (For Hot Mop)	Satin Stainless Polished Stainless Satin Bronze Oil Rubbed Bronze Matte Black	**WD 5-2H SS** **WD 5-2HPS** **WD 5-2H ORB** **WD 5-2H SB** **WD 5-2H BK**	5	$435 $515 $515 $515 $515
	ABS	Satin Stainless Polished Stainless Satin Bronze Oil Rubbed Bronze Matte Black	**WD 5-2A SS** **WD 5-2A PS** **WD 5-2A ORB** **WD 5-2A SB** **WD 5-2A BK**	2	$420 $500 $500 $500 $500
	PVC	Satin Stainless Polished Stainless Satin Bronze Oil Rubbed Bronze Matte Black	**WD 5-2P SS** **WD 5-2P PS** **WD 5-2P ORB** **WD 5-2P SB** **WD 5-2P BK**	2	$420 $500 $500 $500 $500

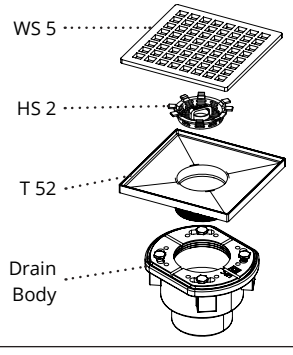

Description	Bonded Flange	Finish	Model	Lbs	List
L/F LIQUID/FABRIC WATERPROOFING **5" x 5" WD 5 Kit with Bonded Flange 2", 3", and 4" Outlet. Kit Includes:** 1 - WS 5 5" x 5" Decorative Plate 1 - T 52 2" Throat 1 - WKEY Lift-Out Key 1 - HS 2 Hair Strainer 1 - BFP 22/ BFA 22/ BFS 22 Bonded Flange	PVC	Satin Stainless Polished Stainless Satin Bronze Oil Rubbed Bronze Matte Black	**WDB 5-P SS** **WDB 5-P PS** **WDB 5-P ORB** **WDB 5-P SB** **WDB 5-P BK**	2	$470 $550 $550 $550 $550
	ABS	Satin Stainless Polished Stainless Satin Bronze Oil Rubbed Bronze Matte Black	**WDB 5-A SS** **WDB 5-A PS** **WDB 5-A ORB** **WDB 5-A SB** **WDB 5-A BK**	2	$470 $550 $550 $550 $550
	Stainless Steel	Satin Stainless Polished Stainless Satin Bronze Oil Rubbed Bronze Matte Black	**WDB 5-S SS** **WDB 5-S PS** **WDB 5-S ORB** **WDB 5-S SB** **WDB 5-S BK**	4	$565 $645 $645 $645 $645

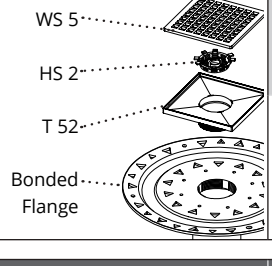

Description	Drain Body	Finish	Model	Lbs	List
HIGH FLOW **5" x 5" WD 5 Kit with HIGH FLOW Drain Body 3" Outlet. Kit Includes:** 1 - WS 5 5" x 5" Decorative Plate 1 - T 54 4" Throat (High Flow) 1 - WKEY Lift-Out Key 1 - HS 4 Hair Strainer 1 - CDI/ CDA/ CDP 43 Drain Body	Cast Iron**	Satin Stainless Polished Stainless Satin Bronze Oil Rubbed Bronze Matte Black	WD 5-3I SS WD 5-3I PS WD 5-3I ORB WD 5-3I SB WD 5-3I SB	22	$470 $570 $570 $570 $570

**If ABS or PVC drain body desired, replace I with A or P in model number (Example: QD 5-3A SS)

*See page 169 for more information on flow rates. • See page 130 for individual components. • See page 235-237 for shipping information.

NEW Stainless Steel Shower Base

Lifetime Guarantee

Covers labor, removal, replacement and restoration.*

LIFETIME GUARANTEE

Features

- Lifetime guarantee against waterproofing failure.
- 304L 16 Gauge Stainless Steel.
- Ability to install and flood test same day.
- Ensures exact wall-to-wall and flush against the wall installation.
- Available with curb or barrier free (curbless).
- Includes linear or center drain.
- Standard size: 30”x60”, custom available (minimum qty 10).
- Drains are available in multiple styles and finishes.

The Install Process

1. Stainless Steel Shower Base – Arrives factory flood tested with a Lifetime Guarantee. The base is ready to install and features an integral drain, pre-sloped floor, and is coated with surface primer for tile installation.

2. Stainless Steel Shower Base With Framing – The base is adhered to the subfloor, leveled and attached to the plumbing. Framing is completed around the shower base or the shower base is placed into a preexisting framed space then secured directly to the framing.

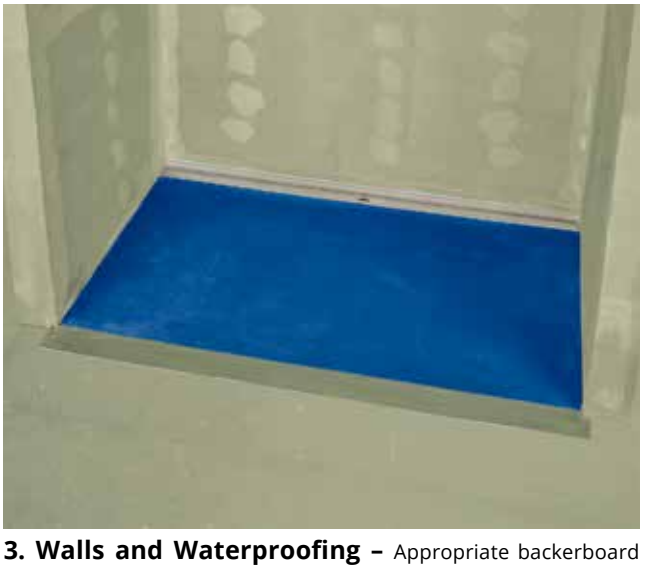

3. Walls and Waterproofing – Appropriate backerboard is mounted to the framing and seated on the flange of the shower base. Liquid or fabric waterproofing is applied over the backer board down to the shower base.

4. Finishing – Natural stone, glass, porcelain, or ceramic tile are applied to the walls and shower base.

*See Infinity Drain, LTD. Stainless Steel Shower Base Lifetime Product Guarantee on page 182-184 for full details.

Beauty above the surface
and smart solutions below.

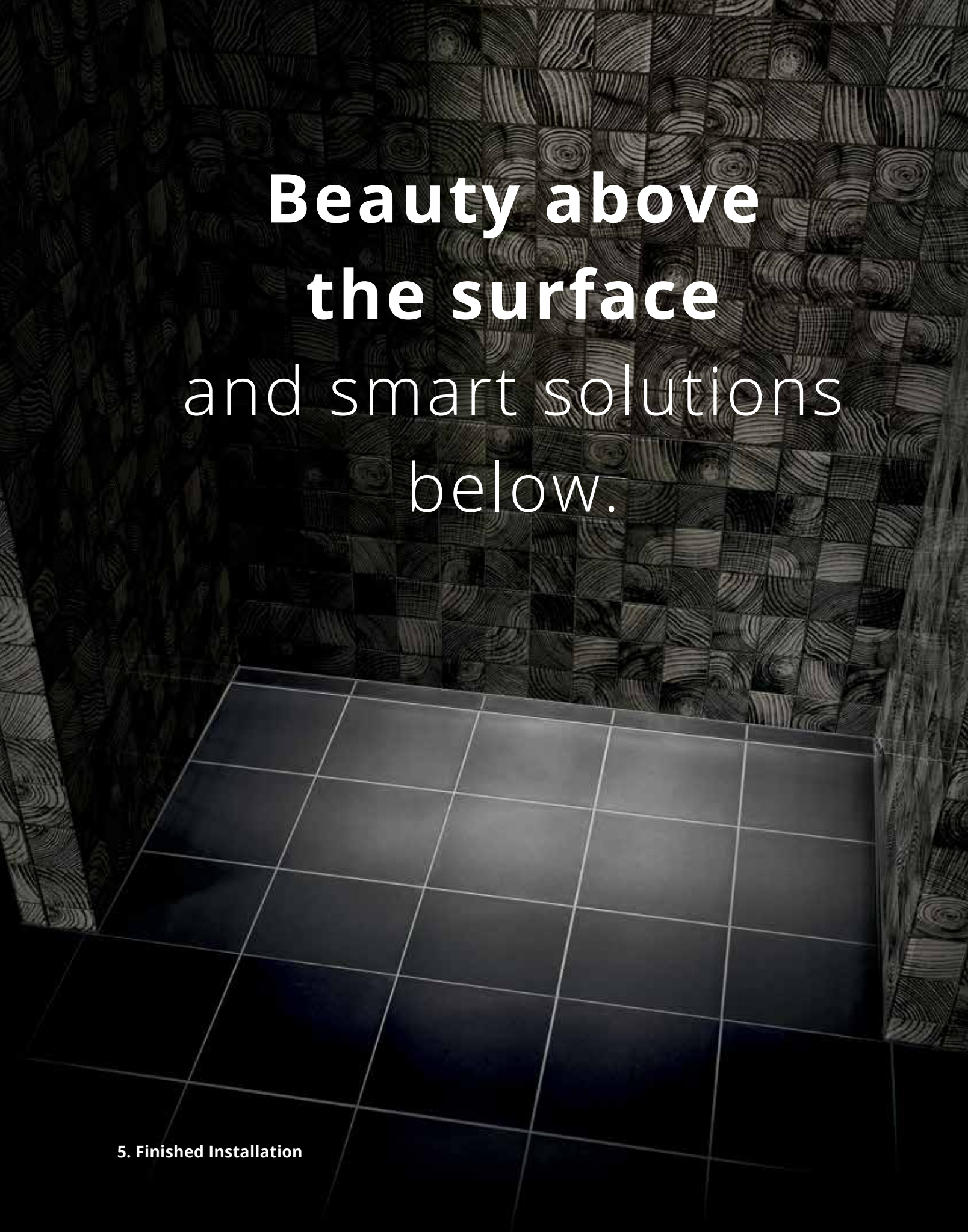

5. Finished Installation

BLC-H-3060TI Tile Insert Frame (tile not included) - Barrier Free Stainless Steel Shower Base

BC-WS NEW

Stainless Steel Shower Base
Wedge Wire Center Drain

Specifications	
Shower Base Material:	16 Ga. 304L Stainless Steel
Decorative Cover Material:	316L Stainless Steel Wedge Wire
Flow Rate:	9 GPM

30"x60" one piece stainless steel shower base with integral drain in standard sizes or custom fabrication is available for job quantities. Shower floor sets shower framing for exact wall to wall installation.

Lifetime Guarantee
Covers labor, removal, replacement and restoration.

LIFETIME GUARANTEE

See page 182-184 for warranty details.

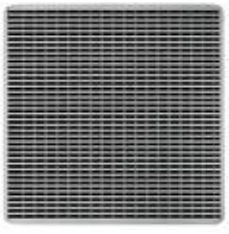

Shower Base kit includes 5"x5" wedge wire decorative cover.

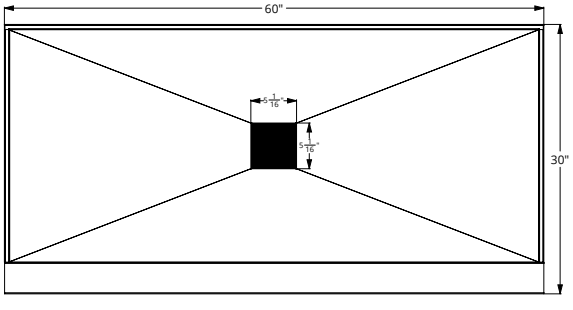

Designed for 1/2" backerboard with 1/2" tile and thinset.

Drain Location		Threshold	Model	Finish	List
5"x 5" Square Drain with **Center Location**		Curbed	**BCC-3060WS-SS**	Satin Stainless	$3580
			BCC-3060WS-PS	Polished Stainless	$3615
			BCC-3060WS-ORB	Oil Rubbed Bronze	$3615
			BCC-3060WS-SB	Satin Bronze	$3615
			BCC-3060WS-BK	Matte Black	$3615
		Barrier Free	**BCC-H-3060WS-SS**	Satin Stainless	$3580
			BCC-H-3060WS-PS	Polished Stainless	$3615
			BCC-H-3060WS-ORB	Oil Rubbed Bronze	$3615
			BCC-H-3060WS-SB	Satin Bronze	$3615
			BCC-H-3060WS-BK	Matte Black	$3615
5"x 5" Square Drain with **Left Location**		Curbed	**BCL-3060WS-SS**	Satin Stainless	$3580
			BCL-3060WS-PS	Polished Stainless	$3615
			BCL-3060WS-ORB	Oil Rubbed Bronze	$3615
			BCL-3060WS-SB	Satin Bronze	$3615
			BCL-3060WS-BK	Matte Black	$3615
		Barrier Free	**BCL-H-3060WS-SS**	Satin Stainless	$3580
			BCL-H-3060WS-PS	Polished Stainless	$3615
			BCL-H-3060WS-ORB	Oil Rubbed Bronze	$3615
			BCL-H-3060WS-SB	Satin Bronze	$3615
			BCL-H-3060WS-BK	Matte Black	$3615
5"x 5" Square Drain with **Right Location**		Curbed	**BCR-3060WS-SS**	Satin Stainless	$3580
			BCR-3060WS-PS	Polished Stainless	$3615
			BCR-3060WS-ORB	Oil Rubbed Bronze	$3615
			BCR-3060WS-SB	Satin Bronze	$3615
			BCR-3060WS-BK	Matte Black	$3615
		Barrier Free	**BCR-H-3060WS-SS**	Satin Stainless	$3580
			BCR-H-3060WS-PS	Polished Stainless	$3615
			BCR-H-3060WS-ORB	Oil Rubbed Bronze	$3615
			BCR-H-3060WS-SB	Satin Bronze	$3615
			BCR-H-3060WS-BK	Matte Black	$3615

*See page 169 for more information on flow rates. • See page 135 for individual components. • See page 189-191 for shipping information.

Specifications	
Shower Base Material:	16 Ga. 304L Stainless Steel
Tile Insert Material:	16 Ga. 304L Stainless Steel
Flow Rate:	9 GPM

NEW **BC-TI**

Stainless Steel Shower Base **Tile Insert** Center Drain

30"x60" one piece stainless steel shower base with integral drain in standard sizes or custom fabrication is available for job quantities. Shower floor sets shower framing for exact wall to wall installation.

Lifetime Guarantee

Covers labor, removal, replacement and restoration.

LIFETIME GUARANTEE

See page 182-184 for warranty details.

Shower Base kit includes 5"x5" tile insert decorative cover.

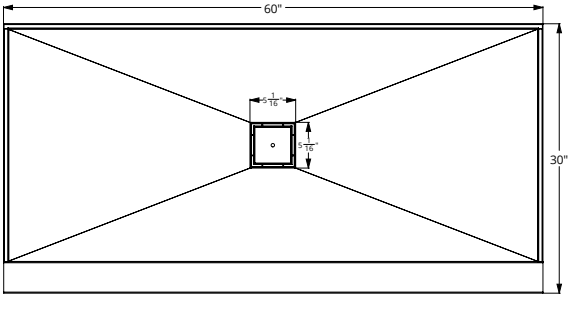

Designed for 1/2" backerboard with 1/2" tile and thinset.

Drain Location		Threshold	Model	Finish	List
5"x 5" Square Drain with **Center Location**		Curbed	**BCC-3060TI-SS**	Satin Stainless	$3530
			BCC-3060TI-PS	Polished Stainless	$3565
			BCC-3060TI-ORB	Oil Rubbed Bronze	$3565
			BCC-3060TI-SB	Satin Bronze	$3565
			BCC-3060TI-BK	Matte Black	$3565
		Barrier Free	**BCC-H-3060TI-SS**	Satin Stainless	$3530
			BCC-H-3060TI-PS	Polished Stainless	$3565
			BCC-H-3060TI-ORB	Oil Rubbed Bronze	$3565
			BCC-H-3060TI-SB	Satin Bronze	$3565
			BCC-H-3060TI-BK	Matte Black	$3565
5"x 5" Square Drain with **Left Location**		Curbed	**BCL-3060TI-SS**	Satin Stainless	$3530
			BCL-3060TI-PS	Polished Stainless	$3565
			BCL-3060TI-ORB	Oil Rubbed Bronze	$3565
			BCL-3060TI-SB	Satin Bronze	$3565
			BCL-3060TI-BK	Matte Black	$3565
		Barrier Free	**BCL-H-3060TI-SS**	Satin Stainless	$3530
			BCL-H-3060TI-PS	Polished Stainless	$3565
			BCL-H-3060TI-ORB	Oil Rubbed Bronze	$3565
			BCL-H-3060TI-SB	Satin Bronze	$3565
			BCL-H-3060TI-BK	Matte Black	$3565
5"x 5" Square Drain with **Right Location**		Curbed	**BCR-3060TI-SS**	Satin Stainless	$3530
			BCR-3060TI-PS	Polished Stainless	$3565
			BCR-3060TI-ORB	Oil Rubbed Bronze	$3565
			BCR-3060TI-SB	Satin Bronze	$3565
			BCR-3060TI-BK	Matte Black	$3565
		Barrier Free	**BCR-H-3060TI-SS**	Satin Stainless	$3530
			BCR-H-3060TI-PS	Polished Stainless	$3565
			BCR-H-3060TI-ORB	Oil Rubbed Bronze	$3565
			BCR-H-3060TI-SB	Satin Bronze	$3565
			BCR-H-3060TI-BK	Matte Black	$3565

*See page 169 for more information on flow rates. • See page 135 for individual components. • See page 189-191 for shipping information.

BC-QS NEW

Stainless Steel Shower Base
Squares Pattern Center Drain

Specifications	
Shower Base Material:	16 Ga. 304L Stainless Steel
Decorative Cover Material:	7 Ga. 304 L Stainless Steel
Flow Rate:	9 GPM

30"x60" one piece stainless steel shower base with integral drain in standard sizes or custom fabrication is available for job quantities. Shower floor sets shower framing for exact wall to wall installation.

Lifetime Guarantee
Covers labor, removal, replacement and restoration.

LIFETIME GUARANTEE

See page 182-184 for warranty details.

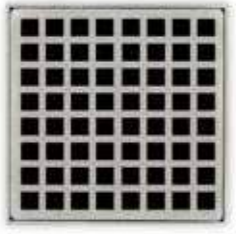

Shower Base kit includes 5"x5" decorative cover with squares pattern

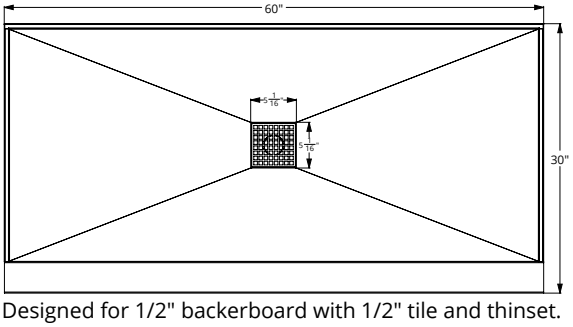

Designed for 1/2" backerboard with 1/2" tile and thinset.

Drain Location		Threshold	Model	Finish	List
5"x 5" Square Drain with **Center Location**		Curbed	**BCC-3060QS-SS**	Satin Stainless	$3495
			BCC-3060QS-PS	Polished Stainless	$3530
			BCC-3060QS-ORB	Oil Rubbed Bronze	$3530
			BCC-3060QS-SB	Satin Bronze	$3530
			BCC-3060QS-BK	Matte Black	$3530
		Barrier Free	**BCC-H-3060QS-SS**	Satin Stainless	$3495
			BCC-H-3060QS-PS	Polished Stainless	$3530
			BCC-H-3060QS-ORB	Oil Rubbed Bronze	$3530
			BCC-H-3060QS-SB	Satin Bronze	$3530
			BCC-H-3060QS-BK	Matte Black	$3530
5"x 5" Square Drain with **Left Location**		Curbed	**BCL-3060QS-SS**	Satin Stainless	$3495
			BCL-3060QS-PS	Polished Stainless	$3530
			BCL-3060QS-ORB	Oil Rubbed Bronze	$3530
			BCL-3060QS-SB	Satin Bronze	$3530
			BCL-3060QS-BK	Matte Black	$3530
		Barrier Free	**BCL-H-3060QS-SS**	Satin Stainless	$3495
			BCL-H-3060QS-PS	Polished Stainless	$3530
			BCL-H-3060QS-ORB	Oil Rubbed Bronze	$3530
			BCL-H-3060QS-SB	Satin Bronze	$3530
			BCL-H-3060QS-BK	Matte Black	$3530
5"x 5" Square Drain with **Right Location**		Curbed	**BCR-3060QS-SS**	Satin Stainless	$3495
			BCR-3060QS-PS	Polished Stainless	$3530
			BCR-3060QS-ORB	Oil Rubbed Bronze	$3530
			BCR-3060QS-SB	Satin Bronze	$3530
			BCR-3060QS-BK	Matte Black	$3530
		Barrier Free	**BCR-H-3060QS-SS**	Satin Stainless	$3495
			BCR-H-3060QS-PS	Polished Stainless	$3530
			BCR-H-3060QS-ORB	Oil Rubbed Bronze	$3530
			BCR-H-3060QS-SB	Satin Bronze	$3530
			BCR-H-3060QS-BK	Matte Black	$3530

*See page 169 for more information on flow rates. • See page 135 for individual components. • See page 189-191 for shipping information.

Specifications	
Shower Base Material:	16 Ga. 304L Stainless Steel
Tile Insert Material:	7 Ga. 304 L Stainless Steel
Flow Rate:	9 GPM

NEW **BC-NS**

Stainless Steel Shower Base
Lines Pattern Center Drain

30"x60" one piece stainless steel shower base with integral drain in standard sizes or custom fabrication is available for job quantities. Shower floor sets shower framing for exact wall to wall installation.

Lifetime Guarantee
Covers labor, removal, replacement and restoration.

LIFETIME GUARANTEE

See page 182-184 for warranty details.

Shower Base kit includes 5"x5" decorative cover with lines pattern

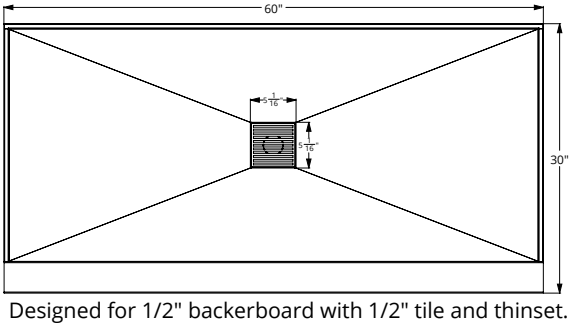

Designed for 1/2" backerboard with 1/2" tile and thinset.

Drain Location		Threshold	Model	Finish	List
5"x 5" Square Drain with **Center Location**		Curbed	**BCC-3060NS-SS**	Satin Stainless	$3495
			BCC-3060NS-PS	Polished Stainless	$3530
			BCC-3060NS-ORB	Oil Rubbed Bronze	$3530
			BCC-3060NS-SB	Satin Bronze	$3530
			BCC-3060NS-BK	Matte Black	$3530
		Barrier Free	**BCC-H-3060NS-SS**	Satin Stainless	$3495
			BCC-H-3060NS-PS	Polished Stainless	$3530
			BCC-H-3060NS-ORB	Oil Rubbed Bronze	$3530
			BCC-H-3060NS-SB	Satin Bronze	$3530
			BCC-H-3060NS-BK	Matte Black	$3530
5"x 5" Square Drain with **Left Location**		Curbed	**BCL-3060NS-SS**	Satin Stainless	$3495
			BCL-3060NS-PS	Polished Stainless	$3530
			BCL-3060NS-ORB	Oil Rubbed Bronze	$3530
			BCL-3060NS-SB	Satin Bronze	$3530
			BCL-3060NS-BK	Matte Black	$3530
		Barrier Free	**BCL-H-3060NS-SS**	Satin Stainless	$3495
			BCL-H-3060NS-PS	Polished Stainless	$3530
			BCL-H-3060NS-ORB	Oil Rubbed Bronze	$3530
			BCL-H-3060NS-SB	Satin Bronze	$3530
			BCL-H-3060NS-BK	Matte Black	$3530
5"x 5" Square Drain with **Right Location**		Curbed	**BCR-3060NS-SS**	Satin Stainless	$3495
			BCR-3060NS-PS	Polished Stainless	$3530
			BCR-3060NS-ORB	Oil Rubbed Bronze	$3530
			BCR-3060NS-SB	Satin Bronze	$3530
			BCR-3060NS-BK	Matte Black	$3530
		Barrier Free	**BCR-H-3060NS-SS**	Satin Stainless	$3495
			BCR-H-3060NS-PS	Polished Stainless	$3530
			BCR-H-3060NS-ORB	Oil Rubbed Bronze	$3530
			BCR-H-3060NS-SB	Satin Bronze	$3530
			BCR-H-3060NS-BK	Matte Black	$3530

*See page 169 for more information on flow rates. • See page 135 for individual components. • See page 189-191 for shipping information.

BL-AS NEW

Stainless Steel Shower Base
Wedge Wire Linear Drain

30"x60" one piece stainless steel shower base with integral drain in standard sizes or custom fabrication is available for job quantities. Shower floor sets shower framing for exact wall to wall installation.

Lifetime Guarantee
Covers labor, removal, replacement and restoration.

LIFETIME GUARANTEE

See page 182-184 for warranty details.

Shower Base kit includes wedge wire linear grate

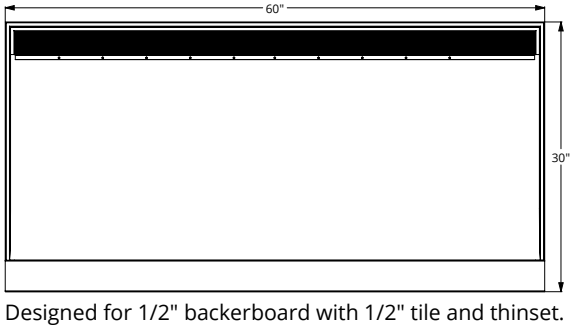

Designed for 1/2" backerboard with 1/2" tile and thinset.

Drain Location		Threshold	Model	Finish	List
Linear Drain with **Back Wall Location**		Curbed	**BLC-3060AS-SS**	Satin Stainless	$3695
			BLC-3060AS-PS	Polished Stainless	$3835
			BLC-3060AS-ORB	Oil Rubbed Bronze	$3835
			BLC-3060AS-SB	Satin Bronze	$3835
			BLC-3060AS-BK	Matte Black	$3835
		Barrier Free	**BLC-H-3060AS-SS**	Satin Stainless	$3695
			BLC-H-3060AS-PS	Polished Stainless	$3835
			BLC-H-3060AS-ORB	Oil Rubbed Bronze	$3835
			BLC-H-3060AS-SB	Satin Bronze	$3835
			BLC-H-3060AS-BK	Matte Black	$3835
Linear Drain with **Left Wall Location**		Curbed	**BLL-3060AS-SS**	Satin Stainless	$3695
			BLL-3060AS-PS	Polished Stainless	$3835
			BLL-3060AS-ORB	Oil Rubbed Bronze	$3835
			BLL-3060AS-SB	Satin Bronze	$3835
			BLL-3060AS-BK	Matte Black	$3835
		Barrier Free	**BLL-H-3060AS-SS**	Satin Stainless	$3695
			BLL-H-3060AS-PS	Polished Stainless	$3835
			BLL-H-3060AS-ORB	Oil Rubbed Bronze	$3835
			BLL-H-3060AS-SB	Satin Bronze	$3835
			BLL-H-3060AS-BK	Matte Black	$3835
Linear Drain with **Right Wall Location**		Curbed	**BLR-3060AS-SS**	Satin Stainless	$3695
			BLR-3060AS-PS	Polished Stainless	$3835
			BLR-3060AS-ORB	Oil Rubbed Bronze	$3835
			BLR-3060AS-SB	Satin Bronze	$3835
			BLR-3060AS-BK	Matte Black	$3835
	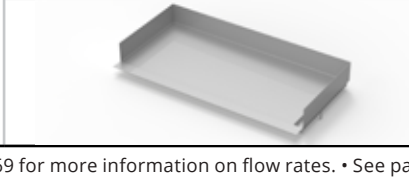	Barrier Free	**BLR-H-3060AS-SS**	Satin Stainless	$3695
			BLR-H-3060AS-PS	Polished Stainless	$3835
			BLR-H-3060AS-ORB	Oil Rubbed Bronze	$3835
			BLR-H-3060AS-SB	Satin Bronze	$3835
			BLR-H-3060AS-BK	Matte Black	$3835

*See page 169 for more information on flow rates. • See page 136 for individual components. • See page 191-193 for shipping information.

NEW **BL-TI**

Stainless Steel Shower Base
Tile Insert Linear Drain

30"x60" one piece stainless steel shower base with integral drain in standard sizes or custom fabrication is available for job quantities. Shower floor sets shower framing for exact wall to wall installation.

Lifetime Guarantee
Covers labor, removal, replacement and restoration.

LIFETIME GUARANTEE

See page 182-184 for warranty details.

Tile not included
Open area for material (Depth 3/8")

Shower Base kit includes tile insert frame

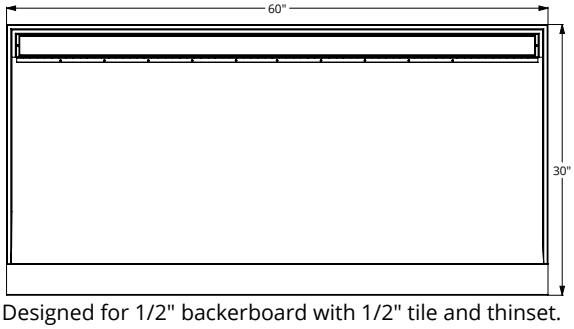

Designed for 1/2" backerboard with 1/2" tile and thinset.

Drain Location		Threshold	Model	Finish	List
Linear Drain with **Back Wall Location**		Curbed	**BLC-3060TI-SS**	Satin Stainless	$3295
			BLC-3060TI-PS	Polished Stainless	$3315
			BLC-3060TI-ORB	Oil Rubbed Bronze	$3315
			BLC-3060TI-SB	Satin Bronze	$3315
			BLC-3060TI-BK	Matte Black	$3315
		Barrier Free	**BLC-H-3060TI-SS**	Satin Stainless	$3295
			BLC-H-3060TI-PS	Polished Stainless	$3315
			BLC-H-3060TI-ORB	Oil Rubbed Bronze	$3315
			BLC-H-3060TI-SB	Satin Bronze	$3315
			BLC-H-3060TI-BK	Matte Black	$3315
Linear Drain with **Left Wall Location**		Curbed	**BLL-3060TI-SS**	Satin Stainless	$3295
			BLL-3060TI-PS	Polished Stainless	$3315
			BLL-3060TI-ORB	Oil Rubbed Bronze	$3315
			BLL-3060TI-SB	Satin Bronze	$3315
			BLL-3060TI-BK	Matte Black	$3315
		Barrier Free	**BLL-H-3060TI-SS**	Satin Stainless	$3295
			BLL-H-3060TI-PS	Polished Stainless	$3315
			BLL-H-3060TI-ORB	Oil Rubbed Bronze	$3315
			BLL-H-3060TI-SB	Satin Bronze	$3315
			BLL-H-3060TI-BK	Matte Black	$3315
Linear Drain with **Right Wall Location**	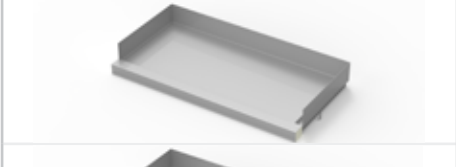	Curbed	**BLR-3060TI-SS**	Satin Stainless	$3295
			BLR-3060TI-PS	Polished Stainless	$3315
			BLR-3060TI-ORB	Oil Rubbed Bronze	$3315
			BLR-3060TI-SB	Satin Bronze	$3315
			BLR-3060TI-BK	Matte Black	$3315
	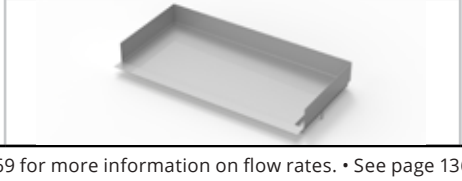	Barrier Free	**BLR-H-3060TI-SS**	Satin Stainless	$3295
			BLR-H-3060TI-PS	Polished Stainless	$3315
			BLR-H-3060TI-ORB	Oil Rubbed Bronze	$3315
			BLR-H-3060TI-SB	Satin Bronze	$3315
			BLR-H-3060TI-BK	Matte Black	$3315

*See page 169 for more information on flow rates. • See page 136 for individual components. • See page 191-193 for shipping information.

BL-IG NEW

Stainless Steel Shower Base
Slotted Pattern Center Drain

30"x60" one piece stainless steel shower base with integral drain in standard sizes or custom fabrication is available for job quantities. Shower floor sets shower framing for exact wall to wall installation.

Lifetime Guarantee
Covers labor, removal, replacement and restoration.

LIFETIME GUARANTEE

See page 182-184 for warranty details.

Shower Base kit includes wedge wire linear grate

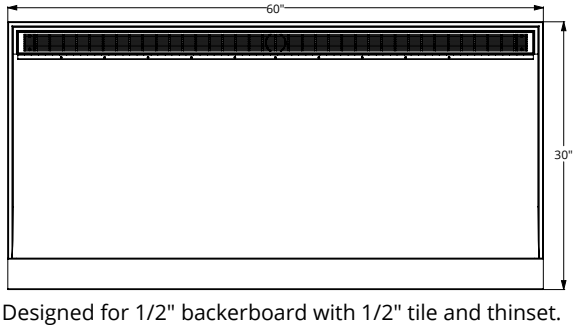

Designed for 1/2" backerboard with 1/2" tile and thinset.

Drain Location		Threshold	Model	Finish	List
Linear Drain with **Back Wall Location**		Curbed	**BLC-3060IG-SS**	Satin Stainless	$3095
			BLC-3060IG-PS	Polished Stainless	$3195
			BLC-3060IG-ORB	Oil Rubbed Bronze	$3195
			BLC-3060IG-SB	Satin Bronze	$3195
			BLC-3060IG-BK	Matte Black	$3195
		Barrier Free	**BLC-H-3060IG-SS**	Satin Stainless	$3095
			BLC-H-3060IG-PS	Polished Stainless	$3195
			BLC-H-3060IG-ORB	Oil Rubbed Bronze	$3195
			BLC-H-3060IG-SB	Satin Bronze	$3195
			BLC-H-3060IG-BK	Matte Black	$3195
Linear Drain with **Left Wall Location**		Curbed	**BLL-3060IG-SS**	Satin Stainless	$3095
			BLL-3060IG-PS	Polished Stainless	$3195
			BLL-3060IG-ORB	Oil Rubbed Bronze	$3195
			BLL-3060IG-SB	Satin Bronze	$3195
			BLL-3060IG-BK	Matte Black	$3195
		Barrier Free	**BLL-H-3060IG-SS**	Satin Stainless	$3095
			BLL-H-3060IG-PS	Polished Stainless	$3195
			BLL-H-3060IG-ORB	Oil Rubbed Bronze	$3195
			BLL-H-3060IG-SB	Satin Bronze	$3195
			BLL-H-3060IG-BK	Matte Black	$3195
Linear Drain with **Right Wall Location**	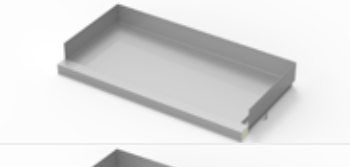	Curbed	**BLR-3060IG-SS**	Satin Stainless	$3095
			BLR-3060IG-PS	Polished Stainless	$3195
			BLR-3060IG-ORB	Oil Rubbed Bronze	$3195
			BLR-3060IG-SB	Satin Bronze	$3195
			BLR-3060IG-BK	Matte Black	$3195
	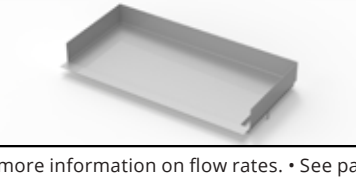	Barrier Free	**BLR-H-3060IG-SS**	Satin Stainless	$3095
			BLR-H-3060IG-PS	Polished Stainless	$3195
			BLR-H-3060IG-ORB	Oil Rubbed Bronze	$3195
			BLR-H-3060IG-SB	Satin Bronze	$3195
			BLR-H-3060IG-BK	Matte Black	$3195

*See page 169 for more information on flow rates. • See page 136 for individual components. • See page 191-193 for shipping information.

ALL APPLICATIONS

Infinite Solutions

Infinity Drain linear drain systems are not just for showers. They are ideal for large scale installations like pools, balconies, driveways, decks, and even smaller applications like sinks and bar tops.

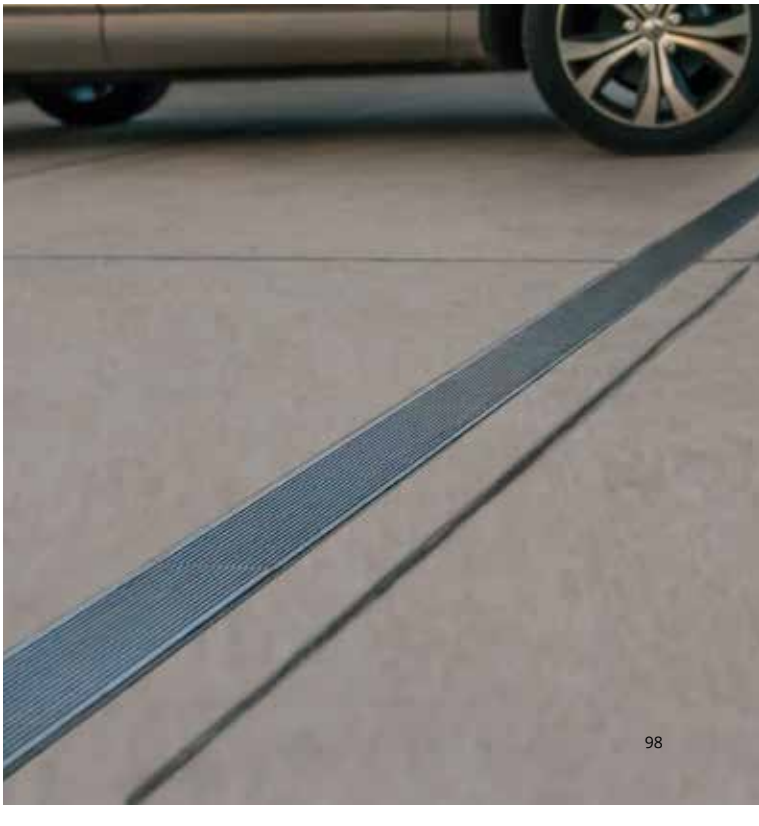

OUTDOOR

Site Sizable drains offer a flexible, durable and sleek solution that is available right away. Stock linear drain components of any series can be joined together to build unlimited lengths. The channel components can be cut to any sizes needed and outlet locations can be placed wherever they are needed. Angle joiners also allow for the ability to create 90° turns along the linear run. For outdoor and/or pool applications (1) outlet for every 96″ of drain is recommended.

Recommended Models for general outdoor/pool applications include:
S-AG 38, S-AG 65, S-DG 38, S-DG 65 and S-TIF 65

Component List Example for 20'x 40' Pool Surround with S-TIF 65 SS:

8 - TA 6560 SS 60" Tile Insert Frames
10 - TA 6548 SS 48" Tile Insert Frames
18 - TIF PL TIF Plates
13 - G 6596 96" PVC Channels
2 - G 6560 60" PVC Channels
3 - G 6536 36" PVC Channels
15 - S 65 PVC Outlet Sections
4 - GAM 65 PVC 90° Angle Joiners

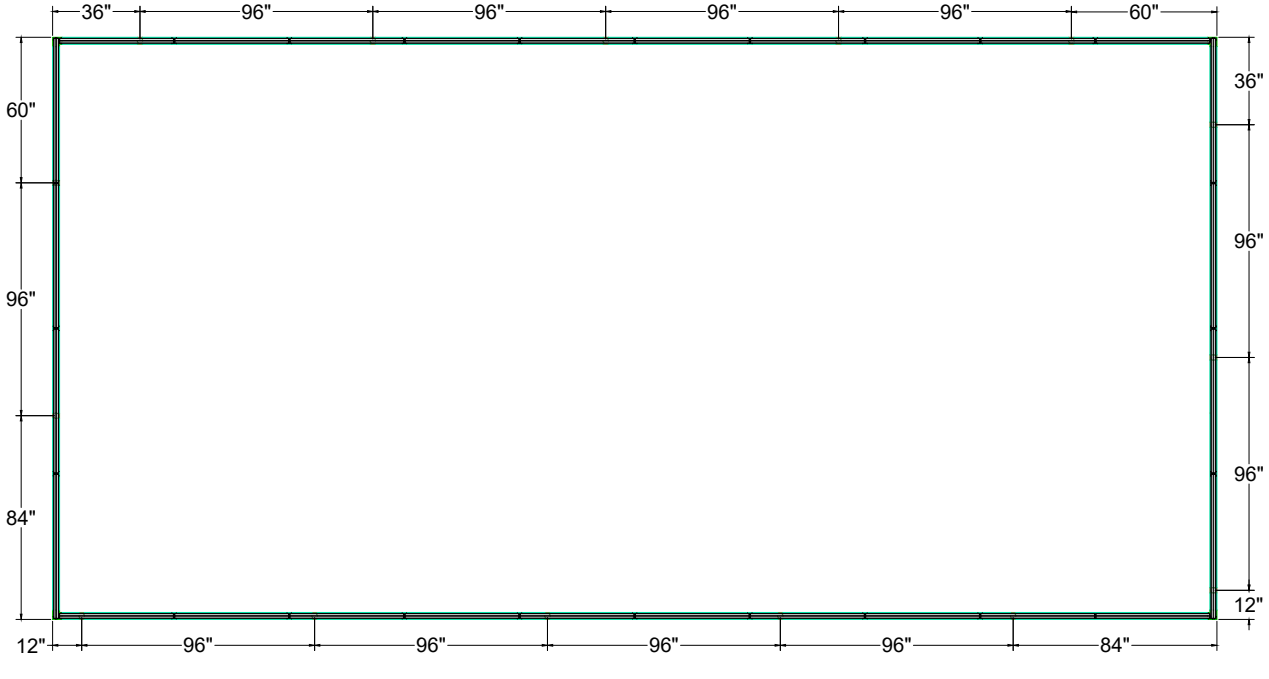

Recommded Models for driveways with light cars: S-AG 38 and S-AG 65

Component List Example 15' driveway drain with S-AG 65 SS

Custom Fixed Flange drains are provided with a 1″ flange all sides and can be custom fabricated to the exact length needed and the outlet location placed wherever is specified. For applications with extensive lengths where liquid applied (cold fluid applied) waterproofing is used including balconies, patios, roofs and more.

See page 109 for a custom order form.

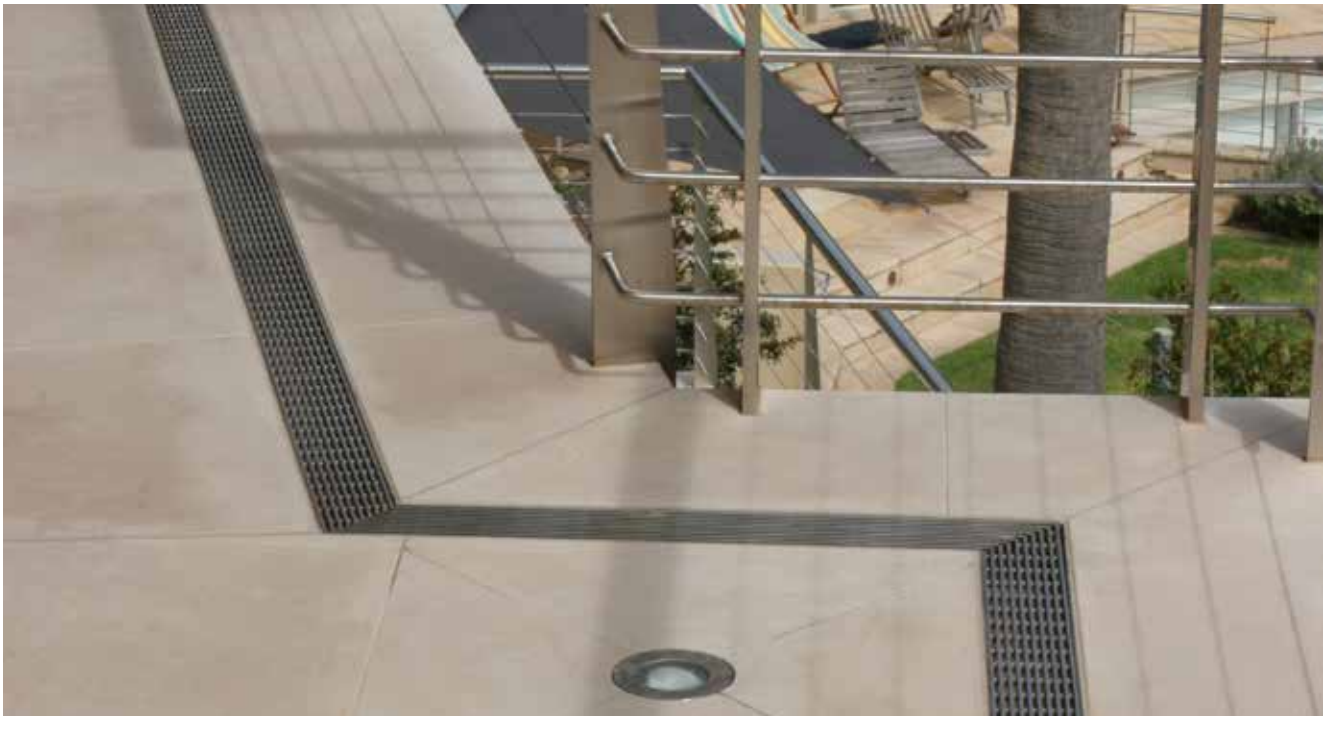

LAVATORY/SINK

Fixed flange drains may be made to short lengths for use as sink drains with outlets smaller than the traditional 2", including 1 ½" or 1 ¼" with no-hub or slip fit connections. The channel would be undermounted to the counter/sink top using an epoxy or water resistant adhesive. See Page 110 for a custom form.

SPA & LOCKER ROOM SHOWERS

Spas drains offer an elegant look to compliment the most relaxing enviroments. These drains can be made for use with modern or traditional waterproofing. Extended lengths are available as stock items using our Site Sizable® or as custom fabrication with our Fixed Flange series.

Locker Room/Fitness linear drains provide a sleek and functional option for showers that are designed in closin close proximity. One drain across multiple showers or a trenach drain along a cooridor of showers will remove water effectively and efficiently.

FOLDING/SLIDING DOOR SYSTEMS

For use with sliding or folding glass wall and door a custom threshold drain can be used to provide a level entrance. The narrow profile minimizes impact on design, allowing seamless integration between internal and external areas; perfect for creating seamlessly combined indoor/outdoor spaces. Water run- off from the door systems is efficiently captured and drained out through the drain that encapsulates the door track.

HEALTHCARE

This innovative drainage product allows the use of a linear drain in a vinyl or safety floor environment. It is particularly well adapted for applications in hospitals, commercial kitchens and schools. The vinyl clamp features a stainless steel channel in which a decoratively finished flange mechanically clamps the vinyl in place. All 65 and 125 Series grate styles are available to be made with this option.

CUSTOM
Fabrication

If you can imagine it, we can manufacture it. Infinity Drain™ offers a variety of customized drainage solutions to your exact specification. Customize length, outlets, configuration, styles, and finishes. Please call or email for pricing and availability.

Customization Options

- Installation types: Fixed (FX), Fixed Flange (FF), and Side Outlet (FT)
- Length of linear drain systems up to 300"
- Outlet placement
- Multiple outlets
- Shapes and configurations (please send drawing for quotation)
- Angle joiners for stainless steel Site Sizable (S) channels

Custom Fabrication Information

- Linear grates will be made 1/8" shorter than specified custom length to allow for removal
- FX Series custom length is based on the entire grate and channel assembly
- FF and FT Series custom length is based on inside channel dimension
- 1/8" tolerance on custom fabricated products
- Completed custom sheet must accompany purchase order from an authorized dealer
- Rush service available

CUSTOM
Fabrication

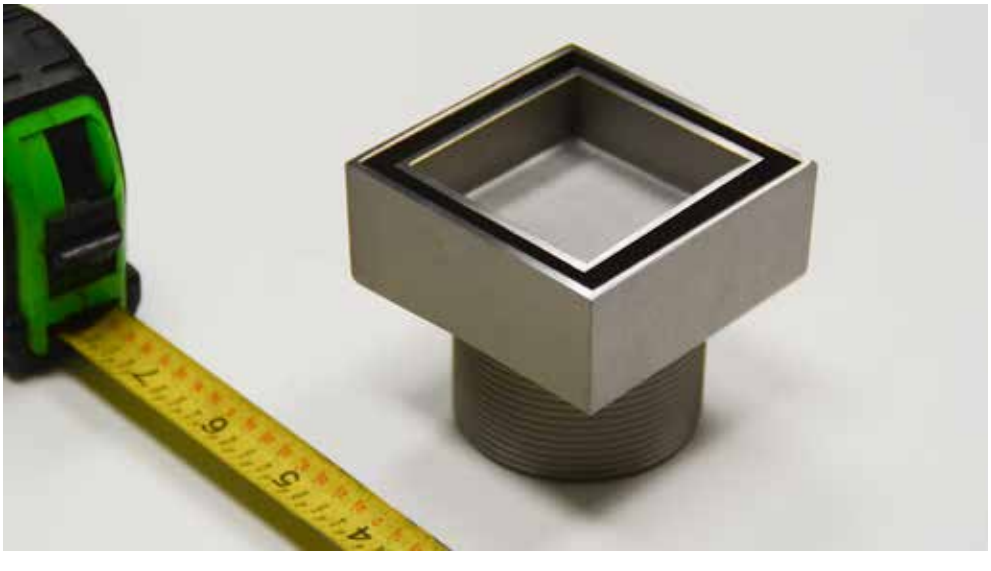

Infinity Drain — CSTMG (Grate) Custom Form

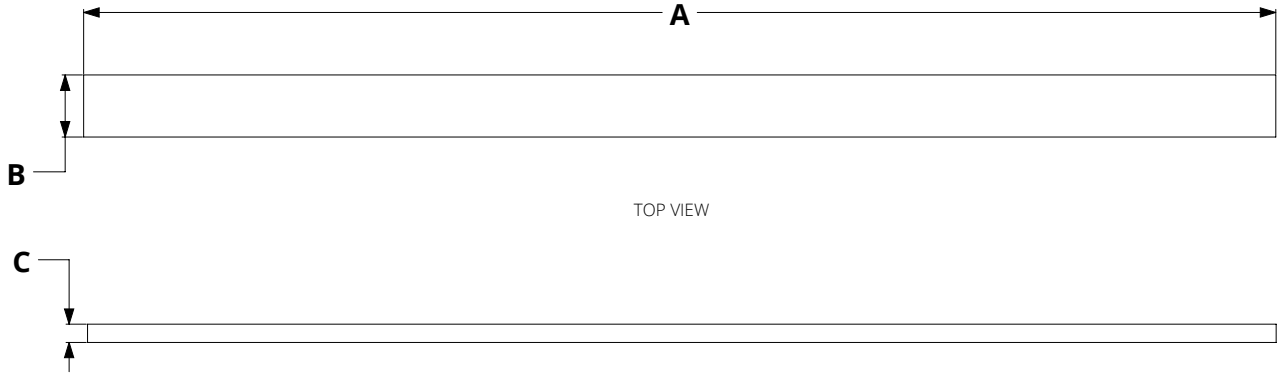

A: Overall Length	**B:** Overall Width *(if not standard)*	**C:** Overall Height *(if not standard)*

Grate Styles - Choose (1) Below

☐ **SA 25** 2MM WEDGE WIRE WIDTH: 1" HEIGHT: 1"	☐ **A 38** 3MM WEDGE WIRE WIDTH: 1 1/2" HEIGHT: 1 1/2"	☐ **LA 65** LOW TILE INSERT WIDTH: 2 1/2" HEIGHT: 1" — STANDARD INSERT DEPTH ACCEPTS UP TO **3/8" MATERIAL**	**D 38** CIRCLE PATTERN WIDTH: 1 1/2" HEIGHT: 1 1/2"
☐ **SA 38** 2MM WEDGE WIRE WIDTH: 1 1/2" HEIGHT: 1"	☐ **A 65** 3MM WEDGE WIRE WIDTH: 2 1/2" HEIGHT: 1 1/2"	☐ **TA 65** TILE INSERT WIDTH: 2 1/2" HEIGHT: 1 1/2" — STANDARD INSERT DEPTH ACCEPTS UP TO **3/4" MATERIAL**	**D 65** CIRCLE PATTERN WIDTH: 2 1/2" HEIGHT: 1 1/2"
☐ **WA 65** 2MM WEDGE WIRE WIDTH: 2 1/2" HEIGHT: 3/4"	☐ **A 100** 2MM WEDGE WIRE WIDTH: 3 7/8" HEIGHT: 3/4"	☐ **BA 65** SOLID GRATE WIDTH: 2 1/2" HEIGHT: 3/4"	**DA 65** CIRCLE PATTERN WIDTH: 2 1/2" HEIGHT: 1"
☐ **SA 65** 2MM WEDGE WIRE WIDTH: 2 1/2" HEIGHT: 1"	☐ **UA 65** SLOTTED PATTERN WIDTH: 2 1/2" HEIGHT: 3/4"	☐ **EA 65** OFFSET OVAL PATTERN WIDTH: 2 1/2" HEIGHT: 3/4"	**MA 65** MARC NEWSON PATTERN WIDTH: 2 1/2" HEIGHT: 3/4"
☐ **SA 125** 2MM WEDGE WIRE WIDTH: 4 15/16" HEIGHT: 1"	☐ **KA 38** SLOTTED PATTERN WIDTH: 1 1/2" HEIGHT: 1"	☐ **KA 65** SLOTTED PATTERN WIDTH: 2 1/2" HEIGHT: 1"	

Grate Finish - *Choose (1)*

- ☐ Satin Stainless (SS)
- ☐ Polished Stainless (PS)
- ☐ Matte Black (BK)
- ☐ Satin Bronze (SB)
- ☐ Oil Rubbed Bronze (ORB)
- ☐ Matte White (WH)
- ☐ Other (Specify Color to Match)* *Not applicable for Rush*

* Custom finishes can be made to match a sample provided by the customer. Contact Infinity Drain for availability of desired finish.

Rush Fabrication Option: *5 Business Days (Additional charges will apply)

☐ **RUSH**

*Rush fabrication is only applicable to outlet and straight-length modifications and is limited to a total of (10) drains per order. The rush charge is applied per set up. The lead time for lengths up to 108" in standard listed finishes is (5) business days, plus shipping. The lead time for lengths between 108" and 120" in standard listed finishes is 8 business days, plus shipping. The lead time begins the next full business day from when a valid PO and signed custom form is received.

NOTE: Wedge wire grates and Tile Insert Frame including (SA 25, SA 38, SA 65, SA 125, A 38, A 65, A 100 and LA 65) can not be fabricated in lengths greater than 72". The Tile Insert Frame TA 65 can not be fabricated in lengths over 60".

Terms and Conditions:
By signing this form, you are agreeing to the terms and conditions herein. All details and finished stated are correct. All dimensions are correct and are to be held within a tolerance of +/- 1/16". All other details and dimensions that are specified as "standard" are subject to manufacturer's tolerance and change without notice. We can assume no responsibility for use of superceded or void data. All custom orders are non-cancellable, non-returnable and non-refunable.

Infinity Drain
145 Dixon Avnue
Amityville, NY 11701
Phone: 516.767.6786
Fax: 516.740.3066
www.Infinitydrain.com

APPROVAL	NAME	JOB NAME/REFERENCE
	SIGNATURE	DATE

Infinity Drain — FXC (Fixed Length) Custom Form

[FX] (Fixed Length) linear drains are designed for use with traditional waterproofing methods including PVC Liners, Rubber Liners, Hot Mop, Lead Pan, Copper Pan and Fiberglass. The overall length of the channel **(A)** is finished length of the drain, which is the outside dimension. All outlet locations **(B)** are measured from the right outside edge. For this installation a mechanicaly fastening drain body (clamp down drain) must be installed. A mortar bed or equal is spread across the shower area and sloped in all directions towards the clamp down drain body. A waterproofing membrane is installed with the drain body and over the mortar bed. The linear drain is threaded into the drain body and set to the correct height. A final layer of mortar is spread to encase the linear drain and is spread across the shower floor with a slope to the drain. Tile or stone is applied to the final mortar bed.

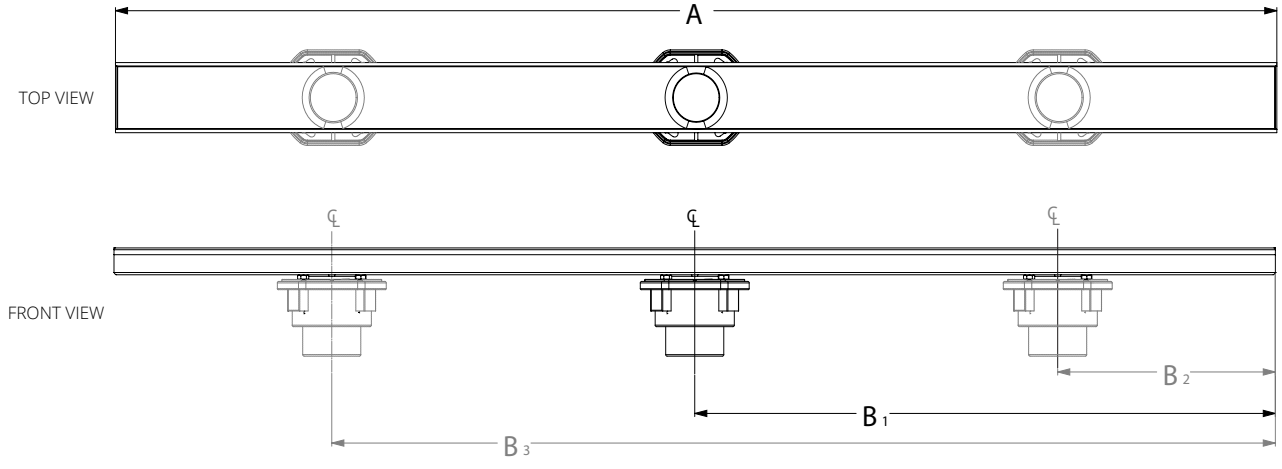

A: Overall Length	**B1:** Outlet Location 1	**B2:** Outlet Location 2	**B3:** Outlet Location 3
		FOR ADDTIONAL OUTLETS IF NEEDED	

Requires 2" clamping floor drain with 2" throat
(Sold separately)

CDI 22 - Cast Iron 2" throat, 2" no hub connect
CDIH 22 - (For Hot Mop) Cast Iron 2" throat, 2" no hub connect
CDA 22 - ABS 2" throat, 2" standard connect
CDP 22 - PVC 2" throat, 2" standard connect

Waterproofing via clamping floor drain:

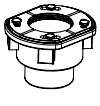

Rush Fabrication Option: *5 Business Days (Additional charges will apply)

☐ **RUSH**

*Rush fabrication is only applicable to outlet and straight-length modifications and is limited to a total of (10) drains per order. The rush charge is applied per set up. The lead time for lengths up to 108" in standard listed finishes is (5) business days, plus shipping. The lead time for lengths between 108" and 120" in standard listed finishes is 8 business days, plus shipping. The lead time begins the next full business day from when a valid PO and signed custom form is received.

Grate Styles - Choose (1) Below OR Channel Only

☐ **FXAS 65** 2 1/2" WIDE WEDGE WIRE

☐ **FXAS 125** 5" WIDE WEDGE WIRE **4" THROAT STANDARD**

☐ **FXIG 65** SLOTTED PATTERN

☐ **FXED 65** OFFSET OVAL PATTERN

☐ **FXMN 65** MARC NEWSON PATTERN

☐ **FXSG 65** SOLID GRATE

☐ **FXTIF 65** TILE INSERT

STANDARD INSERT DEPTH ACCEPTS UP TO **3/4 " MATERIAL**

Grate Finish - *Choose (1)*

- ☐ Satin Stainless (SS)
- ☐ Polished Stainless (PS)
- ☐ Matte Black (BK)
- ☐ Satin Bronze (SB)
- ☐ Oil Rubbed Bronze (ORB)
- ☐ Matte White (WH)
- ☐ Other (Specify Color to Match)* *Not applicable for Rush*

* Custom finishes can be made to match a sample provided by the customer. Contact Infinity Drain for availability of desired finish.

Terms and Conditions:
By signing this form, you are agreeing to the terms and conditions herein. All details and finished stated are correct. All dimensions are correct and are to be held within a tolerance of +/- 1/16". All other details and dimensions that are specified as "standard" are subject to manufacturer's tolerance and change without notice. We can assume no responsibility for use of superceded or void data. All custom orders are non-cancellable, non-returnable and non-refunable.

Infinity Drain
145 Dixon Avnue
Amityville, NY 11701
Phone: 516.767.6786
Fax: 516.740.3066
www.Infinitydrain.com

APPROVAL	NAME	JOB NAME/REFERENCE
	SIGNATURE	DATE

Infinity Drain — FFC (Flanged) Custom Form

[FF] (Flanged) linear drains are designed for use with liquid applied (cold fluid applied) or fabric sheet membranes. The overall inside length of channel **(A)** is the finished length of the drain, with a 1-1/16" flange on all four sides to accept the waterproofing membrane. All outlet locations **(B)** are measured from the right inside channel edge. For this type of installation a mortar bed or equal is created up to and around the drain with the appropriate slope towards the drain. The waterproofing is applied over the mortar bed and the flange of the channel. Tile or stone is applied directly to the waterproofing for a low profile installation. The standard FC channel is provided with a 2" No-Hub Outlet.

Speciality channel options are available.

- **[FCB]** for Double Waterproofing - Comes with a 2" threaded outlet for use with a clamping drain body and a traditional membrane as a primary waterproofing and has the standard 1-1/16" for a liquid/fabric secondary waterproofing.
- **[FCS]** for Schulter KERDI Waterproofing - Comes with KERDI membrane factory applied to the channel for use with the Schluter KERDI system only. Uses a 2" No-Hub Outlet.
- **[FCH]** for Liquid or Fabric Waterproofing only - Comes with a 2" tapered male threaded outlet (MPT) for direct threadeded connection to a 2" female (FPT) fitting.

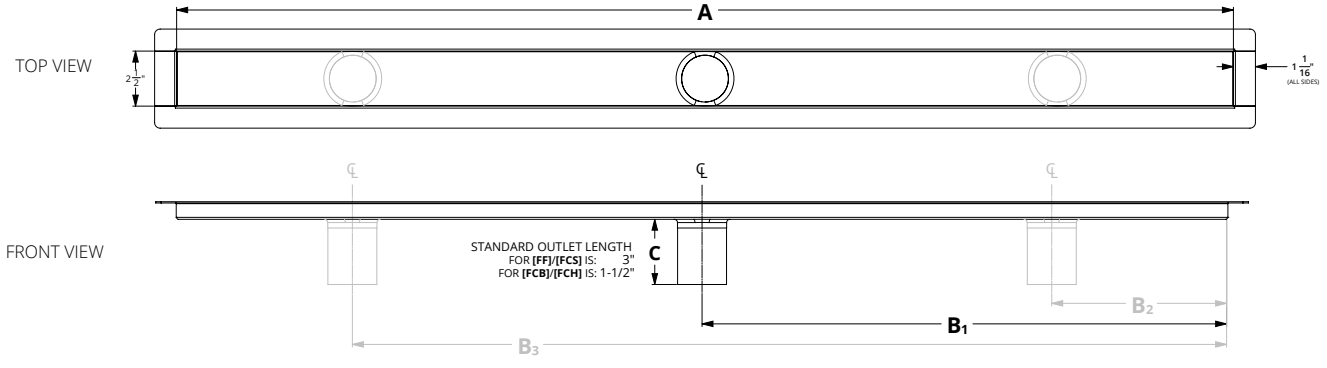

A: Overall Inside Length	B1: Outlet Location 1	B2: Outlet Location 2	B3: Outlet Location 3	C: Outlet Length
		FOR ADDTIONAL OUTLETS IF NEEDED		IF NOT STANDARD

Rush Fabrication Option: *5 Business Days (Additional charges will apply)

☐ **RUSH** *Rush fabrication is only applicable to outlet and straight-length modifications and is limited to a total of (10) drains per order. The rush charge is applied per set up. The lead time for lengths up to 108" in standard listed finishes is (5) business days, plus shipping. The lead time for lengths between 108" and 120" in standard listed finishes is 8 business days, plus shipping. The lead time begins the next full business day from when a valid PO and signed custom form is received.

Channel Option: *Choose (1)*

☐ **[FF] Standard** 2" No Hub Outlet

☐ **[FCB] Double Waterproofing** 2" Threaded Outlet

☐ **[FCS] Flange with Kerdi** Factory applied KERDI - 2" No Hub Outlet

☐ **[FCH] Tapered Threaded** 2" MPT Outlet

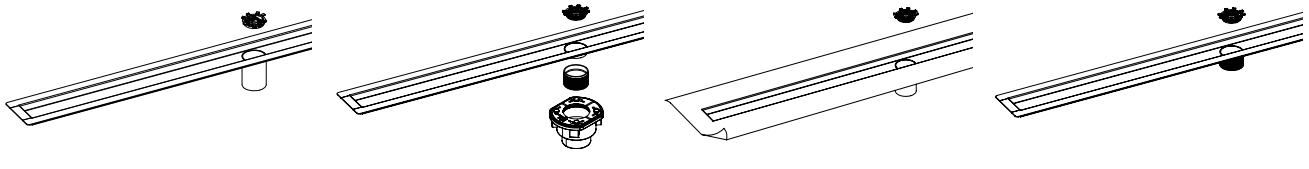

Grate Styles - Choose (1) Below OR Channel Only

☐ FFAS 25 — 1" WIDE WEDGE WIRE

☐ FFAS 65 — 2 1/2" WIDE WEDGE WIRE

☐ FFAS 125 — 5" WIDE WEDGE WIRE **3" OUTLET STANDARD**

☐ FFIG 65 — SLOTTED PATTERN

☐ FFED 65 — OFFSET OVAL PATTERN

☐ FFMN 65 — MARC NEWSON PATTERN

☐ FFST — SLOT DRAIN

☐ FFSG 65 — SOLID GRATE

☐ FFTIF 65 — TILE INSERT

STANDARD INSERT DEPTH ACCEPTS UP TO **3/8" MATERIAL**

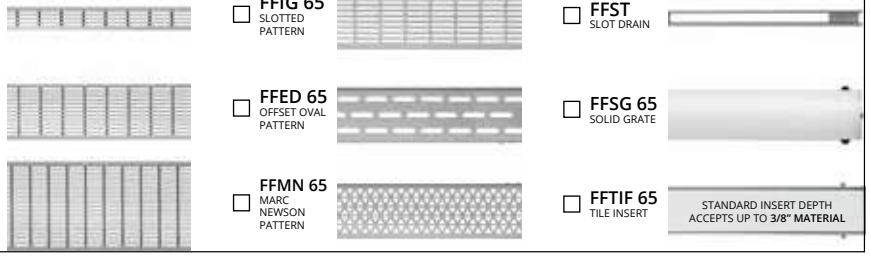

Grate Finish - *Choose (1)*

- ☐ Satin Stainless (SS)
- ☐ Polished Stainless (PS)
- ☐ Matte Black (BK)
- ☐ Satin Bronze (SB)
- ☐ Oil Rubbed Bronze (ORB)
- ☐ Matte White (WH)
- ☐ Other (Specify Color to Match)* *Not applicable for Rush*

* Custom finishes can be made to match a sample provided by the customer. Contact Infinity Drain for availability of desired finish.

Terms and Conditions:
By signing this form, you are agreeing to the terms and conditions herein. All details and finished stated are correct. All dimensions are correct and are to be held within a tolerance of +/- 1/16". All other details and dimensions that are specified as "standard" are subject to manufacturer's tolerance and change without notice. We can assume no responsibility for use of superceded or void data. All custom orders are non-cancellable, non-returnable and non-refunable.

Infinity Drain
145 Dixon Avnue
Amityville, NY 11701
Phone: 516.767.6786
Fax: 516.740.3066
www.Infinitydrain.com

APPROVAL	NAME	JOB NAME/REFERENCE
	SIGNATURE	DATE

Infinity Drain — FFC-Sink Drain Custom Form

[FF] linear drains are typically designed for use with liquid applied (cold fluid applied) or fabric sheet membranes. For a sink application the channel of the drain should be undermounted to the counter top or sink top using an epoxy, waterproof adhesive, or equal. The overall inside length of channel **(A)** is the finished length of the drain, with a 1-1/16" flange on all four sides to accept the waterproofing membrane. All outlet locations **(B)** are measured from the right inside channel edge. The angle of the flange under the basin of the sink **(D)** should be the same as the slope of the basin of the sink. These sink drains are provided with a finished edge that is flush with the height of the decorative grate. This height **(E)** is typically the same as the thickness of the sink top material. The outlet diameter **(F)** is available in various sizes and connection types.

Outlet conenction types include:

- **No Hub -** Two pipes of the same outside diameter are abutted to each other and joined using a rubber coupling.
- **Slip Fit -** A male tail piece slips into another threaded pipe and is joined together with a slip nut and washer.
- **MPT Threaded** - Outlet of the drain has a male threading that is tapered (MPT) to thread into a tapered female fitting (FPT).

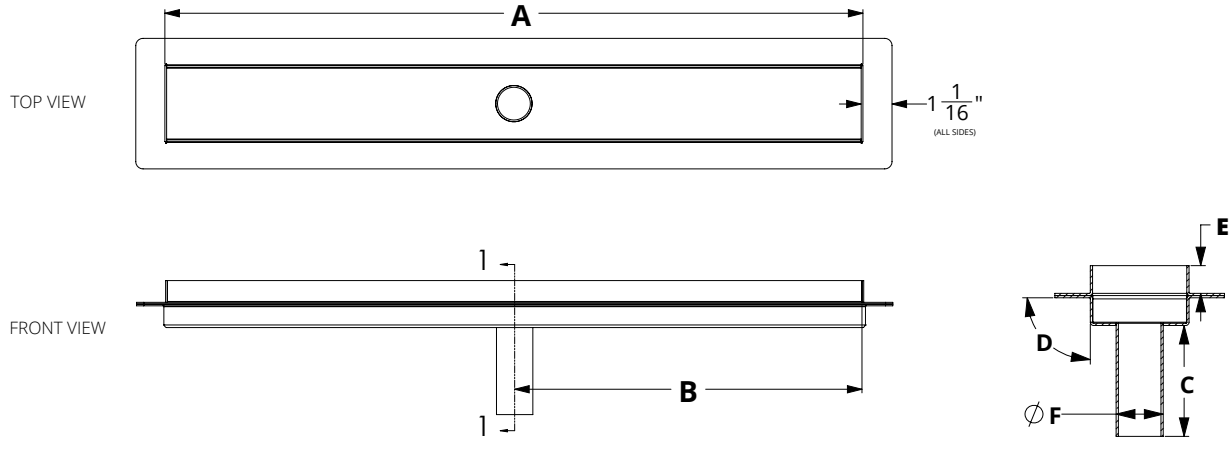

SECTION 1-1

A: Overall Finished Length	B: Outlet Location	C: Outlet Length	D: Flange Angle	E: Finished Edge Height

Outlet Option (F): *Choose (1)*					
☐ 1 1/2" No-Hub Outlet	☐ 1 1/2" Slip Fit Outlet	☐ 1 1/2" MPT Threaded Outlet	☐ 1 1/4" No-Hub Outlet	☐ 1 1/4" Slip Fit Outlet	☐ 1 1/4" MPT Threaded Outlet

Rush Fabrication Option: *5 Business Days (Additional charges will apply)

☐ **RUSH**

*Rush fabrication is only applicable to outlet and straight-length modifications and is limited to a total of (10) drains per order. The rush charge is applied per set up. The lead time for lengths up to 108" in standard listed finishes is (5) business days, plus shipping. The lead time for lengths between 108" and 120" in standard listed finishes is 8 business days, plus shipping. The lead time begins the next full business day from when a valid PO and signed custom form is received.

Grate Styles - Choose (1) Below OR Channel Only

☐ FFAS 25 — 1" WIDE WEDGE WIRE

☐ FFIG 65 — SLOTTED PATTERN

☐ FFSG 65 — SOLID GRATE

☐ FFAS 65 — 2 1/2" WIDE WEDGE WIRE

☐ FFED 65 — OFFSET OVAL PATTERN

☐ FFTIF 65 — TILE INSERT

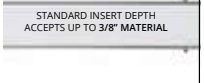

☐ FFST — SLOT DRAIN

☐ FFMN 65 — MARC NEWSON PATTERN

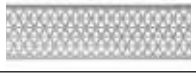

Grate Finish - *Choose (1)*

- ☐ Satin Stainless (SS)
- ☐ Polished Stainless (PS)
- ☐ Matte Black (BK)
- ☐ Satin Bronze (SB)
- ☐ Oil Rubbed Bronze (ORB)
- ☐ Matte White (WH)
- ☐ Other (Specify Color to Match)* *Not applicable for Rush*

* Custom finishes can be made to match a sample provided by the customer. Contact Infinity Drain for availability of desired finish.

Terms and Conditions:
By signing this form, you are agreeing to the terms and conditions herein. All details and finished stated are correct. All dimensions are correct and are to be held within a tolerance of +/- 1/16". All other details and dimensions that are specified as "standard" are subject to manufacturer's tolerance and change without notice. We can assume no responsibility for use of superceded or void data. All custom orders are non-cancellable, non-returnable and non-refunable.

Infinity Drain
145 Dixon Avnue
Amityville, NY 11701
Phone: 516.767.6786
Fax: 516.740.3066
www.Infinitydrain.com

APPROVAL

NAME	JOB NAME/REFERENCE
SIGNATURE	DATE

Infinity Drain — FTC (Side Outlet) Custom Form

[FT] (Side outlet) linear drains are designed for use with liquid applied (cold fluid applied) or fabric sheet membranes. The overall inside length of channel **(A)** is the finished length of the drain, with a 1-1/16" flange on all four sides to accept the waterproofing membrane. All outlet locations **(B)** are measured from the right inside channel edge. For this type of installation a mortar bed or equal is created up to and around the drain with the appropriate slope towards the drain. The waterproofing is applied over the mortar bed and the flange of the channel. Tile or stone is applied directly to the waterproofing for a low profile installation.

Speciality channel options are available.

- **[OCH]** for Threaded Connection - This channel is provided with a 2" male tapered thread (MPT) for direct threaded connection to a female threaded pipe.

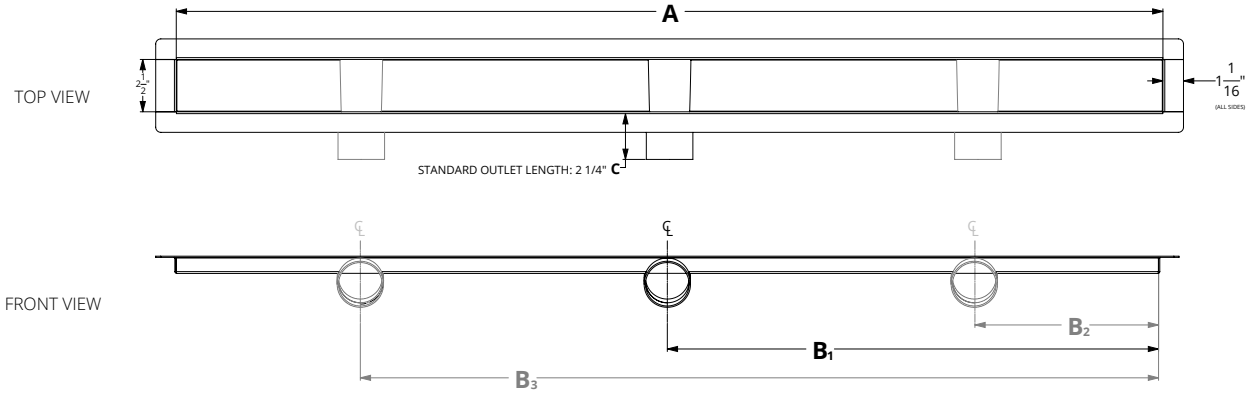

Rush Fabrication Option: *5 Business Days (Additional charges will apply)

☐ **RUSH** *Rush fabrication is only applicable to outlet and straight-length modifications and is limited to a total of (10) drains per order. The rush charge is applied per set up. The lead time for lengths up to 108" in standard listed finishes is (5) business days, plus shipping. The lead time for lengths between 108" and 120" in standard listed finishes is 8 business days, plus shipping. The lead time begins the next full business day from when a valid PO and signed custom form is received.

Channel Option: *Choose (1)*

☐ **[FT] Standard**
2" No Hub Outlet

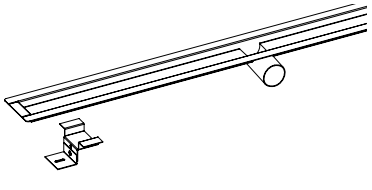

☐ **[FTS] Standard**
Factory applied KERDI - 2" No Hub Outlet

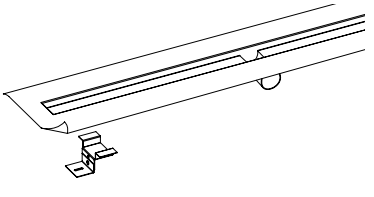

☐ **[OCH] Tapered Threaded**
2" MPT Outlet

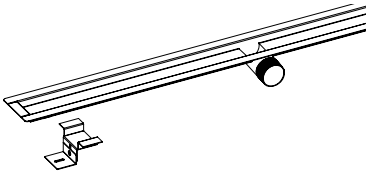

Grate Styles - Choose (1) Below OR Channel Only

☐ FTAS 25 — 1" WIDE WEDGE WIRE

☐ FTIG 65 — SLOTTED PATTERN

☐ FTST — SLOT DRAIN

☐ FTAS 65 — 2 1/2" WIDE WEDGE WIRE

☐ FTED 65 — OFFSET OVAL PATTERN

☐ FTSG 65 — SOLID GRATE

☐ FTAS 125 — 5" WIDE WEDGE WIRE **3" OUTLET STANDARD**

☐ FTMN 65 — MARC NEWSON PATTERN

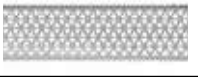

☐ FTTIF 65 — TILE INSERT

STANDARD INSERT DEPTH ACCEPTS UP TO 3/8" MATERIAL

Grate Finish - *Choose (1)*

- ☐ Satin Stainless (SS)
- ☐ Polished Stainless (PS)
- ☐ Matte Black (BK)
- ☐ Satin Bronze (SB)
- ☐ Oil Rubbed Bronze (ORB)
- ☐ Matte White (WH)
- ☐ Other (Specify Color to Match)* *Not applicable for Rush*

* Custom finishes can be made to match a sample provided by the customer. Contact Infinity Drain for availability of desired finish.

Terms and Conditions:

By signing this form, you are agreeing to the terms and conditions herein. All details and finished stated are correct. All dimensions are correct and are to be held within a tolerance of +/- 1/16". All other details and dimensions that are specified as "standard" are subject to manufacturer's tolerance and change without notice. We can assume no responsibility for use of superceded or void data. All custom orders are non-cancellable, non-returnable and non-refunable.

Infinity Drain
145 Dixon Avnue
Amityville, NY 11701
Phone: 516.767.6786
Fax: 516.740.3066
www.Infinitydrain.com

MADE IN THE USA

APPROVAL	NAME	JOB NAME/REFERENCE
	SIGNATURE	DATE

FM524-11-19

For pricing email: **quotes@infinitydrain.com**

Linear Drain

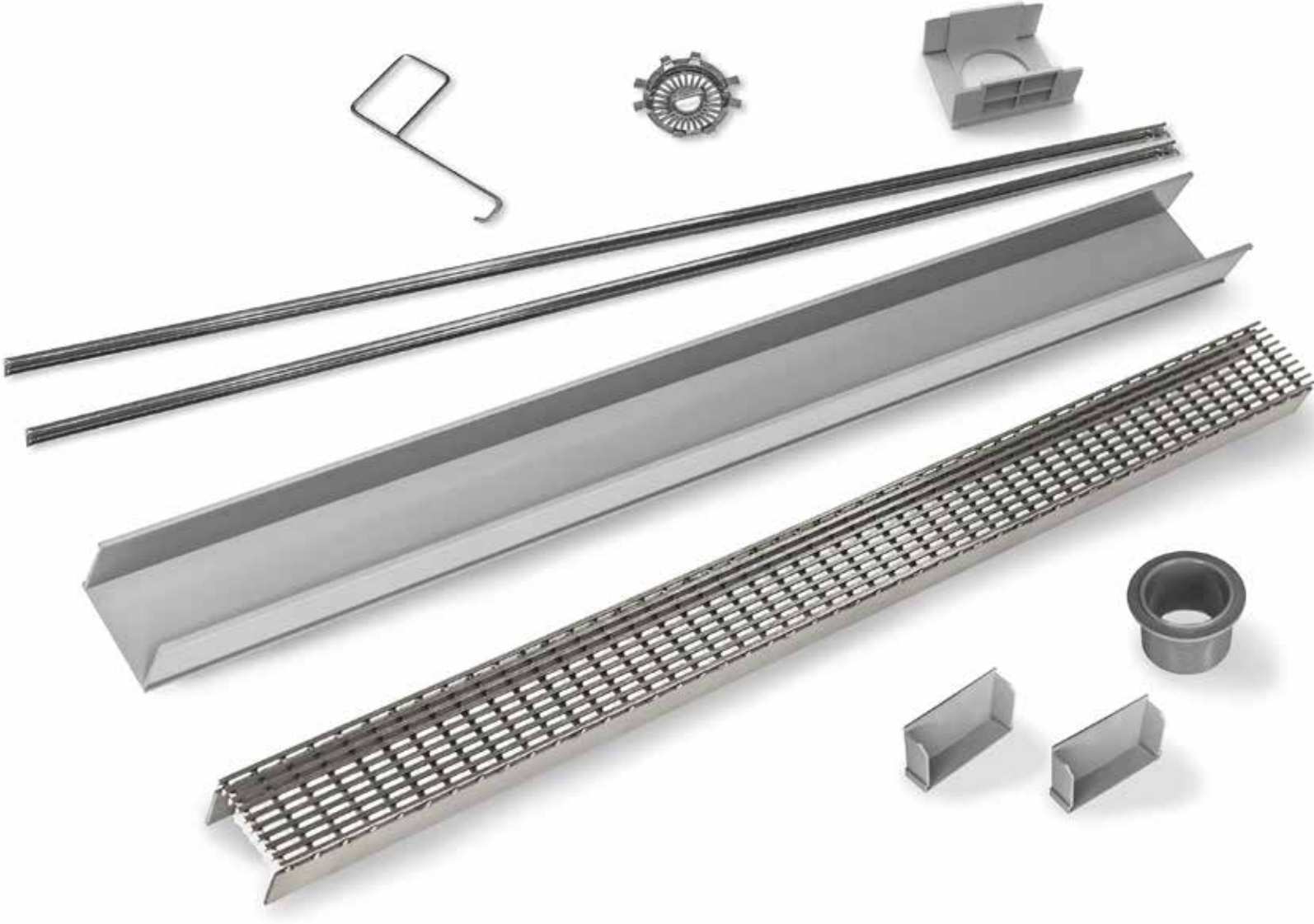

Components

Components

S-AG 38 and S-DG 38

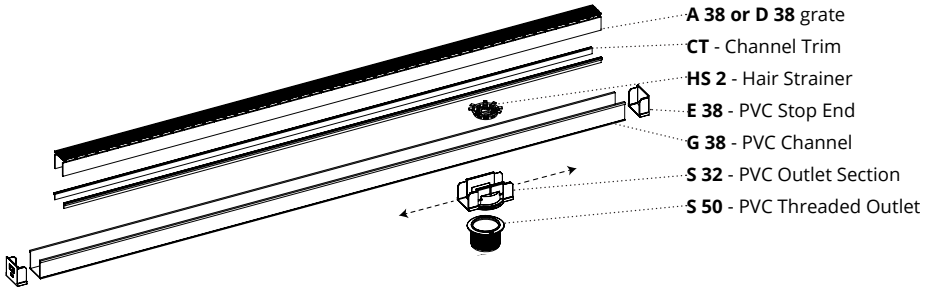

Finishes	
SS	Satin Stainless
PS	Polished Stainless
ORB	Oil Rubbed Bronze
SB	Satin Bronze
BK	Matte Black

GRATES

A 38
Wedge Wire

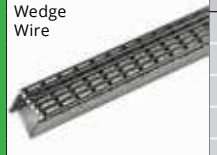

A 38 + D 38 grates both fit into G 38 channel.

36" Grate	List	48" Grate	List	60" Grate	List	72" Grate	List
A 3836 SS	$515	**A 3848 SS**	$550	**A 3860 SS**	$715	**A 3872 SS**	$860
A 3836 PS	$675	**A 3848 PS**	$715	**A 3860 PS**	$850	**A 3872 PS**	$1165
A 3836 ORB	$675	**A 3848 ORB**	$715	**A 3860 ORB**	$850	**A 3872 ORB**	$1165
A 3836 SB	$675	**A 3848 SB**	$715	**A 3860 SB**	$850	**A 3872 SB**	$1165
A 3836 BK	$675	**A 3848 BK**	$715	**A 3860 BK**	$850	**A 3872 BK**	$1165
(35 ⅞" L x 1 ½" W x 1 ½" H)		(47 ⅞" L x 1 ½" W x 1 ½" H)		(59 ⅞" L x 1 ½" W x 1 ½" H)		(71 ⅞" L x 1 ½" W x 1 ½" H)	

D 38
Circle

A 38 + D 38 grates both fit into G 38 channel.

48" Grate	List	60" Grate	List	96" Grate	List
D 3848 SS	$255	**D 3860 SS**	$355	**D 3896 SS**	$460
D 3848 PS	$410	**D 3860 PS**	$500	**D 3896 PS**	$750
D 3848 ORB	$410	**D 3860 ORB**	$500	**D 3896 ORB**	$750
D 3848 SB	$410	**D 3860 SB**	$500	**D 3896 SB**	$750
D 3848 BK	$410	**D 3860 BK**	$500	**D 3896 BK**	$750
(47 ⅞" L x 1 ½" W x 1 ½" H)		(59 ⅞" L x 1 ½" W x 1 ½" H)		(95 ⅞" L x 1 ½" W x 1 ½" H)	

CHANNELS

G 38
PVC Channel

36" Channel	List	48" Channel	List	60" Channel	List	72" Channel	List
G 3836	$45	**G 3848**	$55	**G 3860**	$65	**G 3872**	$95
(33 13/16" L x 1 ⅞" W x 1 ⅝" H)		(45 13/16" L x 1 ⅞" W x 1 ⅝" H)		(57 13/16" L x 1 ⅞" W x 1 ⅝" H)		(69 13/16" L x 1 ⅞" W x 1 ⅝" H)	

96" Channel	List	108" Channel	List
G 3896	$105	**G 38108**	$115
(93 13/16" L x 1 ⅞" W x 1 ⅝" H)		(108" L x 1 ⅞" W x 1 ⅝" H)	

***Note:** The G 38 channel includes the channel spacer (CS 38), for individual channel spacers see page 118 for details and pricing.

PARTS

Component	List
E 38	$5
PVC Stop End for G 38 channel	

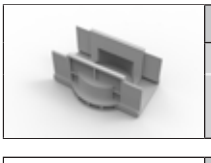

Component	List
S 32	$10
2 3/8" Outlet Section (also acts as a joiner)	

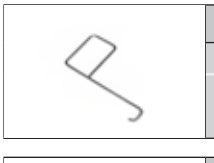

Component	List
AKEY	$5
Lift-Out Key Used with A 38 Grate	

Component	List
S 50	$10
PVC threaded 2" outlet	

Component	List
F 65	$10
PVC non-threaded (for direct connect outdoor installation) No-hub connection	

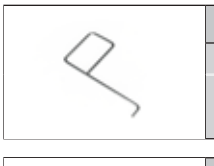

Component	List
DKEY	$5
Lift-Out Key Used with D 38 Grate	

Component	List
GJC 38	$15
PVC straight joiner strip for G 38 channel	

Component	List
GAM 38	$25
PVC 90° angle joiner for G 38 channel	

Component	List
CS 38*	
Channel Spacer See page 118 for details	

Component	List
HS 2	$5
2" hair strainer	

Component	List
CT	
Channel Trim See page 122 for details	

Components

NEW S-LAG 38 and S-LT 38

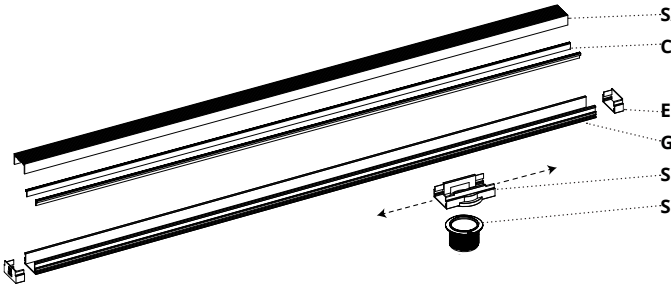

Finishes	
SS	Satin Stainless
PS	Polished Stainless
ORB	Oil Rubbed Bronze
SB	Satin Bronze
BK	Matte Black

GRATES

SA 38
Wedge Wire

A 38 + D 38 grates both fit into G 38 channel.

36" Grate	List	48" Grate	List	60" Grate	List	72" Grate	List
SA 3836 SS	$515	SA 3848 SS	$550	SA 3860 SS	$715	SA 3872 SS	$860
SA 3836 PS	$675	SA 3848 PS	$715	SA 3860 PS	$850	SA 3872 PS	$1165
SA 3836 ORB	$675	SA 3848 ORB	$715	SA 3860 ORB	$850	SA 3872 ORB	$1165
SA 3836 SB	$675	SA 3848 SB	$715	SA 3860 SB	$850	SA 3872 SB	$1165
SA 3836 BK	$675	SA 3848 BK	$715	SA 3860 BK	$850	SA 3872 BK	$1165
(35 ⅞" L x 1 ½" W x 1" H)		(47 ⅞" L x 1 ½" W x 1" H)		(59 ⅞" L x 1 ½" W x 1" H)		(71 ⅞" L x 1 ½" W x 1" H)	

KA 38
Offset Slotted

A 38 + D 38 grates both fit into G 38 channel.

36" Grate	List	48" Grate	List	60" Grate	List	72" Grate	List	96" Grate	List
KA 3836 SS	$210	KA 3848 SS	$255	KA 3860 SS	$355	KA 3872 SS	$415	KA 3896 SS	$460
KA 3836 PS	$325	KA 3848 PS	$410	KA 3860 PS	$500	KA 3872 PS	$645	KA 3896 PS	$750
KA 3836 ORB	$325	KA 3848 ORB	$410	KA 3860 ORB	$500	KA 3872 ORB	$645	KA 3896 ORB	$750
KA 3836 SB	$325	KA 3848 SB	$410	KA 3860 SB	$500	KA 3872 SB	$645	KA 3896 SB	$750
KA 3836 BK	$325	KA 3848 BK	$410	KA 3860 BK	$500	KA 3872 BK	$645	KA 3896 BK	$750
(35 ⅞" L x 1 ½" W x 1" H)		(47 ⅞" L x 1 ½" W x 1" H)		(59 ⅞" L x 1 ½" W x 1" H)		(71 ⅞" L x 1 ½" W x 1" H)		(95 ⅞" L x 1 ½" W x 1" H)	

CHANNELS

GL 38
PVC Channel

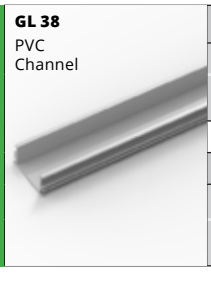

36" Channel	List	48" Channel	List	60" Channel	List	72" Channel	List
GL 3836	$45	GL 3848	$55	GL 3860	$65	GL 3872	$95
(33 3/16" L x 1 ⅞" W x 1 ⅛" H)		(45 3/16" L x 1 ⅞" W x 1 ⅛" H)		(57 3/16" L x 1 ⅞" W x 1 ⅛" H)		(69 3/16" L x 1 ⅞" W x 1 ⅝" H)	

96" Channel	List	108" Channel	List
GL 3896	$105	GL 38108	$115
(93 3/16" L x 1 ⅞" W x 1 ⅛" H)		(108" L x 1 ⅞" W x 1 ⅛" H)	

***Note:** The GL 38 channel includes the channel spacer (CS 38), for individual channel spacers see page 118 for details and pricing.

PARTS

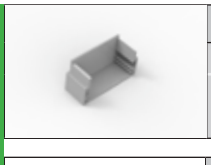

Component	List
EL 38	$5
PVC Stop End for GL 38 channel	

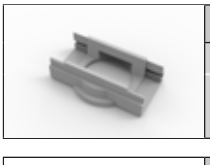

Component	List
SL 32	$10
2 3/8" Outlet Section (also acts as a joiner)	

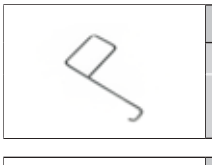

Component	List
AKEY	$5
Lift-Out Key Used with A 38 Grate	

Component	List
S 50	$10
PVC threaded 2" outlet	

Component	List
F 65	$10
PVC non-threaded (For direct connect outdoor installation) No-hub connection	

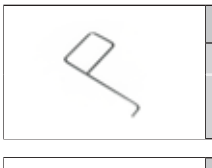

Component	List
DKEY	$5
Lift-Out Key Used with D 38 Grate	

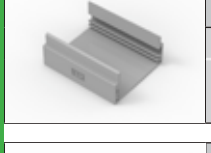

Component	List
GJL 38	$15
PVC straight joiner strip for G 38 channel	

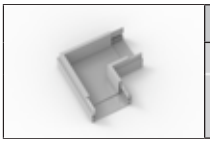

Component	List
GAL 38	$25
PVC 90° angle joiner for G 38 channel	

Component	List
CS 38*	
Channel Spacer See page 118 for details	

Component	List
CT	
Channel Trim See pg 122 for details	

Components

S-AG 65, S-DG 65, and S-TIF 65

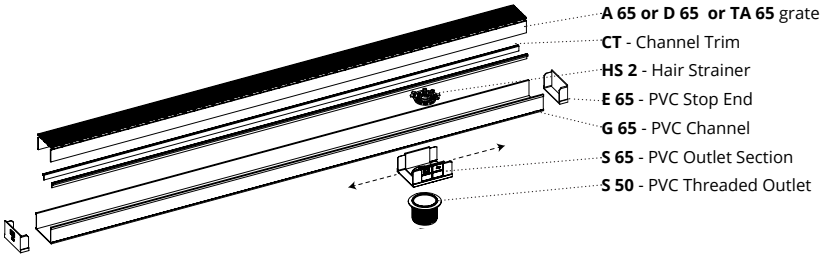

Finishes	
SS	Satin Stainless
PS	Polished Stainless
ORB	Oil Rubbed Bronze
SB	Satin Bronze
BK	Matte Black

GRATES

A 65 Wedge Wire

A 65, D 65, and TA 65 fit into G 65 channel.

36" Grate	List	48" Grate	List	60" Grate	List	72" Grate	List
A 6536 SS	$745	A 6548 SS	$785	A 6560 SS	$920	A 6572 SS	$1240
A 6536 PS	$910	A 6548 PS	$940	A 6560 PS	$1020	A 6572 PS	$1365
A 6536 ORB	$910	A 6548 ORB	$940	A 6560 ORB	$1020	A 6572 ORB	$1365
A 6536 SB	$910	A 6548 SB	$940	A 6560 SB	$1020	A 6572 SB	$1365
A 6536 BK	$910	A 6548 BK	$940	A 6560 BK	$1020	A 6572 BK	$1365
(35 ⅞" L x 2 ½" W x 1 ½" H)		(47 ⅞" L x 2 ½" W x 1 ½" H)		(59 ⅞" L x 2 ½" W x 1 ½" H)		(71 ⅞" L x 2 ½" W x 1 ½" H)	

D 65 Circle

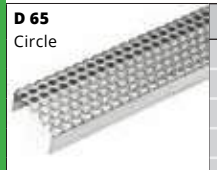

A 65, D 65, and TA 65 fit into G 65 channel.

48" Grate	List	60" Grate	List	96" Grate	List
D 6548 SS	$285	D 6560 SS	$395	D 6596 SS	$525
D 6548 PS	$415	D 6560 PS	$570	D 6596 PS	$750
D 6548 ORB	$415	D 6560 ORB	$570	D 6596 ORB	$750
D 6548 SB	$415	D 6560 SB	$570	D 6596 SB	$750
D 6548 BK	$415	D 6560 BK	$570	D 6596 BK	$750
(47 ⅞" L x 2 ½" W x 1 ½" H)		(59 ⅞" L x 2 ½" W x 1 ½" H)		(95 ⅞" L x 2 ½" W x 1 ½" H)	

TA 65 Tile Insert

A 65, D 65, and TA 65 fit into G 65 channel.

40" Grate	List	48" Grate	List	60" Grate	List
TA 6540 SS	$540	TA 6548 SS	$660	TA 6560 SS	$840
TA 6540 PS	$615	TA 6548 PS	$735	TA 6560 PS	$915
TA 6540 ORB	$615	TA 6548 ORB	$735	TA 6560 ORB	$915
TA 6540 SB	$615	TA 6548 SB	$735	TA 6560 SB	$915
TA 6540 BK	$615	TA 6548 BK	$735	TA 6560 BK	$915
(39 ⅞" L x 2 ½" W x 1 ½" H)		(47 ⅞" L x 2 ½" W x 1 ½" H)		(59 ⅞" L x 2 ½" W x 1 ½" H)	

CHANNELS

G 65 PVC Channel

36" Channel	List	40" Channel	List	48" Channel	List	60" Channel	List	72" Channel	List
G 6536	$50	G 6540	$55	G 6548	$60	G 6560	$80	G 6572	$105
(33 13/16" L x 2 15/16" W x 1 ⅝" H)		(37 13/16" L x 2 15/16" W x 1 ⅝" H)		(45 13/16" L x 2 15/16" W x 1 ⅝" H)		(57 13/16" L x 2 15/16" W x 1 ⅝" H)		(69 13/16" L x 2 15/16" W x 1 ⅝" H)	

80" Channel	List	96" Channel	List	108" Channel	List
G 6580	$110	G 6596	$115	G 65108	$130
(77 13/16" L x 2 15/16" W x 1 ⅝" H)		(93 13/16" L x 2 15/16" W x 1 ⅝" H)		(108" L x 2 15/16" W x 1 ⅝" H)	

***Note:** The G 65 channel includes the channel spacer (CS 65), for individual channel spacers see page 118 for details and pricing.

PARTS

Component	List
E 65	$5
PVC Stop End for G 65 channel	

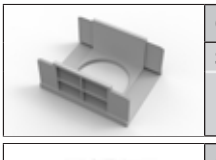

Component	List
S 65	$10
2 3/8" Outlet Section (also acts as a joiner)	

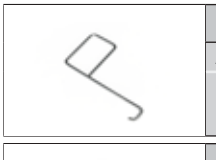

Component	List
AKEY	$5
Lift-Out Key Used with TA/A 65 Grate	

Component	List
S 50	$10
PVC threaded 2" outlet	

Component	List
F 65	$10
PVC non-threaded (for direct connect outdoor installation) No-hub connection	

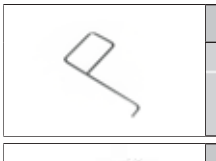

Component	List
DKEY	$5
Lift-Out Key Used with D 65 Grate	

Component	List
GJC 65	$15
PVC straight joiner strip for G 65 channel	

Component	List
GAM 65	$25
PVC 90° angle joiner for G 65 channel	

Component	List
TIF PL	$40
TIF Plates - used to adjust TA 65	

Component	List
HS 2	$5
2" hair strainer	

Component	List
CT	
Channel Trim See page 122 for details	

Component	List
CS 65*	
Channel Spacer See page 118 for details	

Components

NEW S-LAG 65, S-LT 65, and S-LTIF

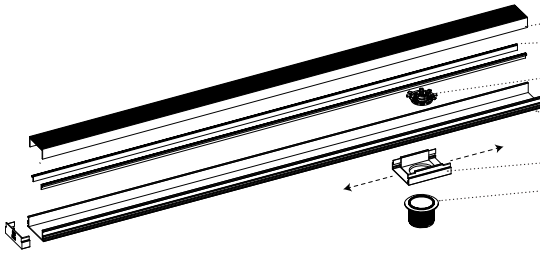

Finishes	
SS	Satin Stainless
PS	Polished Stainless
ORB	Oil Rubbed Bronze
SB	Satin Bronze
BK	Matte Black

GRATES

SA 65
Wedge Wire

SA 65, KA 65, and RA 65 fit into GL 65 channel.

36" Grate	List	48" Grate	List	60" Grate	List	72" Grate	List
SA 6536 SS	$610	SA 6548 SS	$780	SA 6560 SS	$920	SA 6572 SS	$1035
SA 6536 PS	$775	SA 6548 PS	$905	SA 6560 PS	$1085	SA 6572 PS	$1295
SA 6536 ORB	$775	SA 6548 ORB	$905	SA 6560 ORB	$1085	SA 6572 ORB	$1295
SA 6536 SB	$775	SA 6548 SB	$905	SA 6560 SB	$1085	SA 6572 SB	$1295
SA 6536 BK	$775	SA 6548 BK	$905	SA 6560 BK	$1085	SA 6572 BK	$1295
(35 ⅞" L x 2 ½" W x 1" H)		(47 ⅞" L x 2 ½" W x 1" H)		(59 ⅞" L x 2 ½" W x 1" H)		(71 ⅞" L x 2 ½" W x 1" H)	

KA 65
Offset Slotted

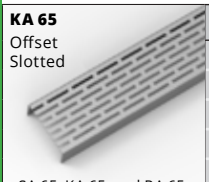

SA 65, KA 65, and RA 65 fit into GL 65 channel.

36" Grate	List	48" Grate	List	60" Grate	List	72" Grate	List	96" Grate	List
KA 6536 SS	$240	KA 6548 SS	$320	KA 6560 SS	$450	KA 6572 SS	$480	KA 6596 SS	$680
KA 6536 PS	$360	KA 6548 PS	$480	KA 6560 PS	$650	KA 6572 PS	$720	KA 6596 PS	$895
KA 6536 ORB	$360	KA 6548 ORB	$480	KA 6560 ORB	$650	KA 6572 ORB	$720	KA 6596 ORB	$895
KA 6536 SB	$360	KA 6548 SB	$480	KA 6560 SB	$650	KA 6572 SB	$720	KA 6596 SB	$895
KA 6536 BK	$360	KA 6548 BK	$480	KA 6560 BK	$650	KA 6572 BK	$720	KA 6596 BK	$895
(35 ⅞" L x 2 ½" W x 1" H)		(47 ⅞" L x 2 ½" W x 1" H)		(59 ⅞" L x 2 ½" W x 1" H)		(71 ⅞" L x 2 ½" W x 1" H)		(95 ⅞" L x 2 ½" W x 1" H)	

RA 65
Tile Insert

SA 65, KA 65, and RA 65 fit into GL 65 channel.

36" Grate	List	48" Grate	List	60" Grate	List
RA 6536 SS	$555	RA 6548 SS	$715	RA 6560 SS	$895
RA 6536 PS	$585	RA 6548 PS	$755	RA 6560 PS	$935
RA 6536 ORB	$585	RA 6548 ORB	$755	RA 6560 ORB	$935
RA 6536 SB	$585	RA 6548 SB	$755	RA 6560 SB	$935
RA 6536 BK	$585	RA 6548 BK	$755	RA 6560 BK	$935
(35 ⅞" L x 2 ½" W x 1" H)		(47 ⅞" L x 2 ½" W x 1" H)		(59 ⅞" L x 2 ½" W x 1" H)	

CHANNELS

GL 65
PVC Channel

36" Channel	List	48" Channel	List	60" Channel	List	72" Channel	List
GL 6536	$55	GL 6548	$70	GL 6560	$90	GL 6572	$115
(33 3/16" L x 2 15/16" W x 1 ⅛" H)		(45 3/16" L x 2 15/16" W x 1 ⅛" H)		(57 3/16" L x 2 15/16" W x 1 ⅛" H)		(69 3/16" L x 2 15/16" W x 1 ⅛" H)	

96" Channel	List	108" Channel	List
GL 6596	$125	GL 65108	$135
(93 3/16" L x 2 15/16" W x 1 ⅛" H)		(108" L x 2 15/16" W x 1 ⅛" H)	

***Note:** The GL 65 channel includes the channel spacer (CS 65), for individual channel spacers see page 118 for details and pricing.

PARTS

Component	List
EL 65	$5
PVC Stop End for GL 65 channel	

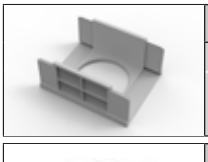

Component	List
SL 65	$10
2 3/8" Outlet Section (also acts as a joiner)	

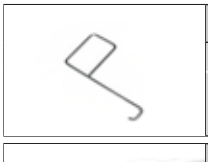

Component	List
AKEY	$5
Lift-Out Key Used with TA/A 65 Grate	

Component	List
S 50	$10
PVC threaded 2" outlet	

Component	List
F 65	$10
PVC non-threaded (for direct connect outdoor installation) No-hub connection	

Component	List
CS 65*	
Channel Spacer See page 118 for details	

Component	List
GJL 65	$15
PVC straight joiner strip for GL 65 channel	

Component	List
GAL 65	$25
PVC 90° angle joiner for GL 65 channel	

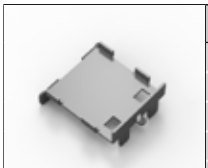

Component	List
ER 65 SS	$25
ER 65 PS	$25
ER 65 ORB	$25
ER 65 SB	$25
ER 65 BK	$25

Component	List
HS 2	$5
2" hair strainer	

Component	List
CT	
Channel Trim See page 122 for details	

Components

S-AG 100

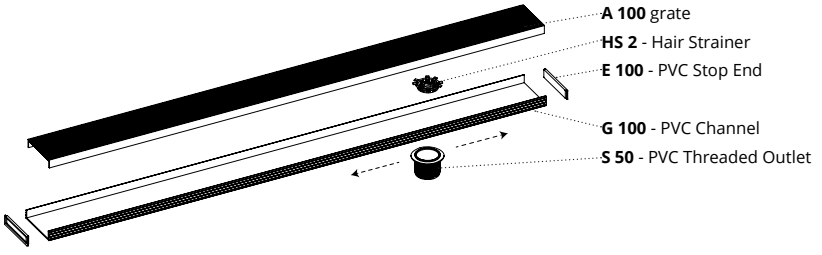

Finishes	
SS	Satin Stainless
PS	Polished Stainless
ORB	Oil Rubbed Bronze
SB	Satin Bronze
BK	Matte Black

GRATES

A 100
Wedge Wire

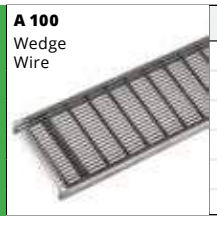

48" Grate	List
A 10048 SS	$880
A 10048 PS	$1175
A 10048 ORB	$1175
A 10048 SB	$1175
A 10048 BK	$1175
(47 ¼" L x3 15/16" W x 3/4" H) 10 lbs	

CHANNELS

G 100
PVC Channel

48" Channel	List	96" Channel	List	108" Channel	List
G 10048	$60	**G 10096**	$130	**G 100108**	$135
(47 1/2" L x 4 3/16" W x 13/16" H) 10 lbs		(95 1/2" L x 4 3/16" W x 13/16" H) 12 lbs		(107 1/2" L x 4 3/16" W x 13/16" H) 12 lbs	

PARTS

Component	List
E 100	$5
PVC Stop End for G 100 channel	

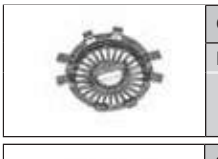

Component	List
HS 2	$5
2" hair strainer	

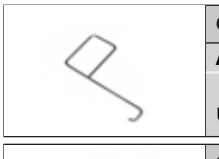

Component	List
AKEY	$5
Lift-Out Key Used with TA/A 65 Grate	

Component	List
S 50	$10
PVC threaded 2" outlet	

Component	List
F 65	$10
PVC non-threaded (for direct connect outdoor installation) No-hub connection	

Component	List
F 100	$10
3" PVC non-threaded (for direct connect outdoor installation) No-hub connection	

Component	List
GJ 100	$10
PVC straight joiner strip for G 100 channel	

Component	List
GA 100	$25
PVC 90° angle joiner for G 100 channel	

Components
Channel Spacer

Available for PVC Site Sizable™ Series.

Channel Spacer in placed in the channel during installation to prevent channel flexing. Channel Spacer also acts as a mudguard to prevent debris from entering the Site Sizable™ channel assembly. See specific series installation instructions for more details.

The Channel Spacer can be purchased separately and is included in the G 38 and G 65 channel. It is included in the following kits:

- S-AG 38
- S-AG 65
- S-DG 38
- S-DG 65
- S-LAG 38
- S-LAG 65
- S-LT 38
- S-LT 65
- S-TIF 65

	Description	Model	List
	Channel Spacer for G 38 Channel	**CS 3836** **CS 3848** **CS 3860** **CS 3872** **CS 3896** **CS 38108**	$10 $10 $15 $20 $25 $30
	Channel Spacer for G 65 Channel	**CS 6536** **CS 6540** **CS 6548** **CS 6560** **CS 6572** **CS 6580** **CS 6596** **CS 65108**	$10 $10 $15 $15 $20 $25 $30 $35

Components

S-DGAS 65/99 and S-AS 65/99

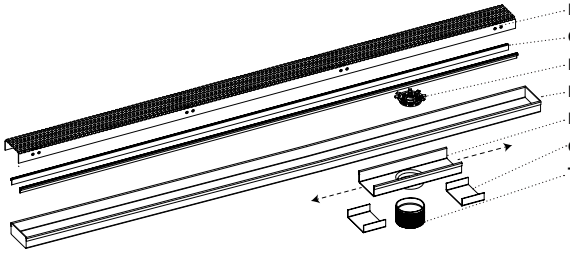

Finishes	
SS	Satin Stainless
PS	Polished Stainless
ORB	Oil Rubbed Bronze
SB	Satin Bronze
BK	Matte Black

GRATES

SA 65
Wedge Wire

SA 65 and DA 65 fit into LC/SC 65 channel.

36" Grate	List	48" Grate	List	60" Grate	List	72" Grate	List
SA 6536 SS	$610	SA 6548 SS	$780	SA 6560 SS	$920	SA 6572 SS	$1035
SA 6536 PS	$775	SA 6548 PS	$905	SA 6560 PS	$1085	SA 6572 PS	$1295
SA 6536 ORB	$775	SA 6548 ORB	$905	SA 6560 ORB	$1085	SA 6572 ORB	$1295
SA 6536 SB	$775	SA 6548 SB	$905	SA 6560 SB	$1085	SA 6572 SB	$1295
SA 6536 BK	$775	SA 6548 BK	$905	SA 6560 BK	$1085	SA 6572 BK	$1295
(35 ⅞" L x 2 ½" W x 1" H)		(47 ⅞" L x 2 ½" W x 1" H)		(59 ⅞" L x 2 ½" W x 1" H)		(69 ⅞" L x 2 ½" W x 1" H)	

DA 65
Circle

SA 65 and DA 65 fit into LC/SC 65 channel.

36" Grate	List	48" Grate	List	60" Grate	List	72" Grate	List	96" Grate	List
DA 6536 SS	$175	DA 6548 SS	$245	DA 6560 SS	$275	DA 6572 SS	$395	DA 6596 SS	$415
DA 6536 PS	$275	DA 6548 PS	$285	DA 6560 PS	$295	DA 6572 PS	$500	DA 6596 PS	$520
DA 6536 ORB	$275	DA 6548 ORB	$285	DA 6560 ORB	$295	DA 6572 ORB	$500	DA 6596 ORB	$520
DA 6536 SB	$275	DA 6548 SB	$285	DA 6560 SB	$295	DA 6572 SB	$500	DA 6596 SB	$520
DA 6536 BK	$275	DA 6548 BK	$285	DA 6560 BK	$295	DA 6572 BK	$500	DA 6596 BK	$520
(35 ⅞" L x 2 ½" W x 1" H)		(47 ⅞" L x 2 ½" W x 1" H)		(59 ⅞" L x 2 ½" W x 1" H)		(69 ⅞" L x 2 ½" W x 1" H)		(95 ⅞" L x 2 ½" W x 1" H)	

CHANNELS

Closed Ended Stainless Steel Channel

LC 65

28" Channel	List	40" Channel	List	52" Channel	List	64" Channel	List	88" Channel	List
LC 6528 SS	$225	LC 6540 SS	$275	LC 6552 SS	$345	LC 6564 SS	$540	LC 6588 SS	$560
LC 6528 PS	$260	LC 6540 PS	$335	LC 6552 PS	$365	LC 6564 PS	$640	LC 6588 PS	$680
LC 6528 ORB	$260	LC 6540 ORB	$335	LC 6552 ORB	$365	LC 6564 ORB	$640	LC 6588 ORB	$680
LC 6528 SB	$260	LC 6540 SB	$335	LC 6552 SB	$365	LC 6564 SB	$640	LC 6588 SB	$680
LC 6528 BK	$260	LC 6540 BK	$335	LC 6552 BK	$365	LC 6564 BK	$640	LC 6588 BK	$680
(28" L x 2 ⅞" W x 1 1/16" H)		(40" L x 2 ⅞" W x 1 1/16" H)		(52" L x 2 ⅞" W x 1 1/16" H)		(64" L x 2 ⅞" W x 1 1/16" H)		(88" L x 2 ⅞" W x 1 1/16" H)	

Open Ended Stainless Steel Channel

SC 65

48" Channel	List	96" Channel	List
SC 6548 SS	$170	SC 6596 SS	$340
SC 6548 PS	$230	SC 6596 PS	$460
SC 6548 ORB	$230	SC 6596 ORB	$460
SC 6548 SB	$230	SC 6596 SB	$460
SC 6548 BK	$230	SC 6596 BK	$460
(48" L x 2 ⅞" W x 1 1/16" H)		(96" L x 2 ⅞" W x 1 1/16" H)	

PARTS

8" Outlet	List
LF 65 SS	$95
LF 65 PS	$105
LF 65 ORB	$105
LF 65 SB	$105
LF 65 BK	$105

8" Outlet	List
LF 99 SS	$300
LF 99 PS	$310
LF 99 ORB	$310
LF 99 SB	$310
LF 99 BK	$310

90° Joiner	List
SLA 65 SS	$130
SLA 65 PS	$140
SLA 65 ORB	$140
SLA 65 SB	$140
SLA 65 BK	$140

Component	List
ZSIKA	$10
M-1 All Purpose Sealant and Adhesive	

Component	List
GJS 65	$25
PVC straight joiner strip for GL 65 channel	

Component	List
TNAS	$45
2" Stainless Steel Threaded Nipple - 1½" Length	

Component	List
HS 2	$5
2" hair strainer	

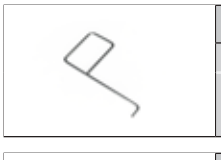

Component	List
DKEY	$5
Lift-Out Key Used with DA 65 Grate	

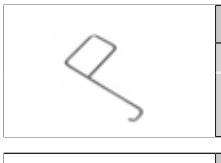

Component	List
AKEY	$5
Lift-Out Key Used with SA 65 Grate	

End Section	List
SE 65 SS	$50
SE 65 PS	$60
SE 65 ORB	$60
SE 65 SB	$60
SE 65 BK	$60

Component	List
CT	
Channel Trim	
See page 122 for details	

Components

S-TIFAS 65/99

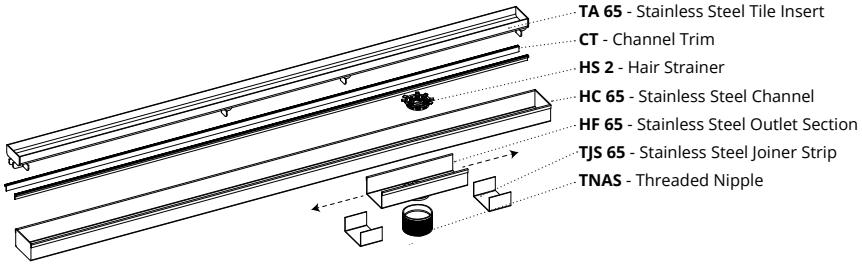

Finishes	
SS	Satin Stainless
PS	Polished Stainless
ORB	Oil Rubbed Bronze
SB	Satin Bronze
BK	Matte Black

GRATE

TA 65
Tile Insert

40" Grate	List	48" Grate	List	60" Grate	List
TA 6540 SS	$540	TA 6548 SS	$660	TA 6560 SS	$840
TA 6540 PS	$615	TA 6548 PS	$735	TA 6560 PS	$915
TA 6540 ORB	$615	TA 6548 ORB	$735	TA 6560 ORB	$915
TA 6540 SB	$615	TA 6548 SB	$735	TA 6560 SB	$915
TA 6540 BK	$615	TA 6548 BK	$735	TA 6560 BK	$915
(39 ⅞" L x 2 ½" W x 1 ½" H)		(47 ⅞" L x 2 ½" W x 1 ½" H)		(59 ⅞" L x 2 ½" W x 1 ½" H)	

TA 65, A 65, and D 65 fit into the TC 65 and HC 65 channel. See page 115 for A 65 and D 65 component details.

CHANNELS

Closed Ended Stainless Steel Channel

HC 65

32" Channel	List	40" Channel	List	52" Channel	List	72" Channel	List	88" Channel	List
HC 6532 SS	$180	HC 6540 SS	$205	HC 6552 SS	$225	HC 6572 SS	$275	HC 6588 SS	$395
HC 6532 PS	$200	HC 6540 PS	$245	HC 6552 PS	$275	HC 6572 PS	$285	HC 6588 PS	$415
HC 6532 ORB	$200	HC 6540 ORB	$245	HC 6552 ORB	$275	HC 6572 ORB	$285	HC 6588 ORB	$415
HC 6532 SB	$200	HC 6540 SB	$245	HC 6552 SB	$275	HC 6572 SB	$285	HC 6588 SB	$415
HC 6532 BK	$200	HC 6540 BK	$245	HC 6552BK	$275	HC 6572 BK	$285	HC 6588 BK	$415
(32" L x 2 ⅞" W x 1 ⅝" H)		(40" L x 2 ⅞" W x 1 ⅝" H)		(52" L x 2 ⅞" W x 1 ⅝" H)		(72" L x 2 ⅞" W x 1 ⅝" H)		(88" L x 2 ⅞" W x 1 ⅝" H)	

Open Ended Stainless Steel Channel

TC 65

48" Channel	List	96" Channel	List
TC 6548 SS	$305	TC 6596 SS	$620
TC 6548 PS	$370	TC 6596 PS	$745
TC 6548 ORB	$370	TC 6596 ORB	$745
TC 6548 SB	$370	TC 6596 SB	$745
TC 6548 BK	$370	TC 6596 BK	$745
(48" L x 2 ⅞" W x 1 ⅝" H)		(96" L x 2 ⅞" W x 1 ⅝" H)	

PARTS

8" Outlet	List
HF 65 SS	$100
HF 65 PS	$110
HF 65 ORB	$110
HF 65 SB	$110
HF 65 BK	$110

8" Outlet	List
HF 99 SS	$565
HF 99 PS	$620
HF 99 ORB	$620
HF 99 SB	$620
HF 99 BK	$620

90° Joiner	List
SHA 65 SS	$130
SHA 65 PS	$140
SHA 65 ORB	$140
SHA 65 SB	$140
SHA 65 BK	$140

Component	List
ZSIKA	$10
M-1 All Purpose Sealant and Adhesive	

Component	List
TJS 65	$25
Stainless Steel joiner strip for HC 65 channel	

Component	List
TNAS	$45
2" Stainless Steel Threaded Nipple - 1½" Length	

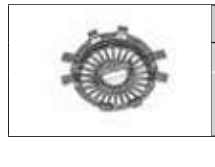

Component	List
HS 2	$5
2" hair strainer	

Component	List
TIF PL	$40
TIF Plates - used to adjust TA 65	

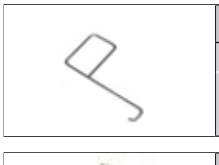

Component	List
AKEY	$5
Lift-Out Key	
Used with TA 65 Grate	

End Section	List
TE 65 SS	$60
TE 65 PS	$75
TE 65 ORB	$75
TE 65 SB	$75
TE 65 BK	$75

Component	List
CT	
Channel Trim	
See page 122 for details	

Components
Channel Trim

See installation instructions for full details.

Components
Channel Trim

Available for both PVC and stainless steel Site Sizable™ Series.

The Channel Trim covers the joints along the Site Sizable™ channel assembly. On the PVC Site Sizable™ Series, the trim conceals the exposed PVC edge.

Channel Trim can be purchased separately and is included in the following kits:

- S-AG 38
- S-AG 65
- S-DG 38
- S-DG 65
- S-LAG 38
- S-LAG 65
- S-LT 38
- S-LT 65
- S-AS 65/99
- S-DGAS 65/99
- S-TIF 65
- S-TIFAS 65/99

CT

Channel Trim

Description	Model	Finish	Lbs	List
36" Channel Trim (35 ⅞" L x ¼" W x ½" H)	**CT 36 SS**	Satin Stainless	1	$10
	CT 36 PS	Polished Stainless		$10
	CT 36 ORB	Oil Rubbed Bronze		$10
	CT 36 SB	Satin Bronze		$10
	CT 36 BK	Matte Black		$10
40" Channel Trim (39 ⅞" L x ¼" W x ½" H)	**CT 40 SS**	Satin Stainless	1	$10
	CT 40 PS	Polished Stainless		$15
	CT 40 ORB	Oil Rubbed Bronze		$15
	CT 40 SB	Satin Bronze		$15
	CT 40 BK	Matte Black		$15
48" Channel Trim (47 ⅞" L x ¼" W x ½" H)	**CT 48 SS**	Satin Stainless	1	$10
	CT 48 PS	Polished Stainless		$15
	CT 48 ORB	Lifetime Oil Rubbed Bronze		$15
	CT 48 SB	Satin Bronze		$15
	CT 48 BK	Matte Black		$15
60" Channel Trim (59 ⅞" L x ¼" W x ½" H)	**CT 60 SS**	Satin Stainless	1	$15
	CT 60 PS	Polished Stainless		$20
	CT 60 ORB	Lifetime Oil Rubbed Bronze		$20
	CT 60 SB	Satin Bronze		$20
	CT 60 BK	Matte Black		$20
72" Channel Trim (71 ⅞" L x ¼" W x ½" H)	**CT 72 SS**	Satin Stainless	1	$20
	CT 72 PS	Polished Stainless		$25
	CT 72 ORB	Lifetime Oil Rubbed Bronze		$25
	CT 72 SB	Satin Bronze		$25
	CT 72 BK	Matte Black		$25
80" Channel Trim (79 ⅞" L x ¼" W x ½" H)	**CT 80 SS**	Satin Stainless	1	$25
	CT 80 PS	Polished Stainless		$30
	CT 80 ORB	Lifetime Oil Rubbed Bronze		$30
	CT 80 SB	Satin Bronze		$30
	CT 80 BK	Matte Black		$30
96" Channel Trim (95 ⅞" L x ¼" W x ½" H)	**CT 96 SS**	Satin Stainless	1	$30
	CT 96 PS	Polished Stainless		$35
	CT 96 ORB	Lifetime Oil Rubbed Bronze		$35
	CT 96 SB	Satin Bronze		$35
	CT 96 BK	Matte Black		$35

Components

Channel and Parts for FX 65, FF 65, FCS 65, FCB 65, and FT series (used with grates on page 124)

(Fixed channel options shown, except FXTIF 65 (page 125), ST series (page 126), and 125 Series (page 127)

CHANNELS

XC 65 Channel for [FX] series.
Used with traditional waterproofing. This channel requires a threaded nipple (TNAS), see below. See page 149 for installation details.

32" Channel	List	36" Channel	List	42" Channel	List	48" Channel	List	60" Channel	List
XC 6532 SS	$280	XC 6536 SS	$305	XC 6542 SS	$320	XC 6548 SS	$340	XC 6560 SS	$410
XC 6532 PS	$325	XC 6536 PS	$355	XC 6542 PS	$370	XC 6548 PS	$400	XC 6560 PS	$455
XC 6532 ORB	$325	XC 6536 ORB	$355	XC 6542 ORB	$370	XC 6548 ORB	$400	XC 6560 ORB	$455
XC 6532 SB	$325	XC 6536 SB	$355	XC 6542 SB	$370	XC 6548 SB	$400	XC 6560 SB	$455
XC 6532 BK	$325	XC 6536 BK	$355	XC 6542 BK	$370	XC 6548 BK	$400	XC 6560 BK	$455

FC 65 Channel for [FF] series.
Used with fabric/liquid waterproofing. Includes channel support and hardware. See page 151 for installation details.

24" Channel	List	32" Channel	List	36" Channel	List	42" Channel	List	48" Channel	List	60" Channel	List
FC 6524 SS	$285	FC 6532 SS	$375	FC 6536 SS	$405	FC 6542 SS	$415	FC 6548 SS	$430	FC 6560 SS	$450

FCS 65 Channel for [FCS] series.
Used with fabric/liquid waterproofing. Includes channel support and hardware. See page 153 for installation details.

24" Channel	List	32" Channel	List	36" Channel	List	42" Channel	List	48" Channel	List	60" Channel	List
FCS 6524 SS	$375	FCS 6532 SS	$475	FCS 6536 SS	$525	FCS 6542 SS	$575	FCS 6548 SS	$625	FCS 6560 SS	$725

FCB 65 Channel for [FCB] series.
Used with traditional and fabric/liquid waterproofing. Includes threaded nipple. See page 157 for installation details.

24" Channel	List	32" Channel	List	36" Channel	List	42" Channel	List	48" Channel	List	60" Channel	List
FCB 6524 SS	$330	FCB 6532 SS	$420	FCB 6536 SS	$450	FCB 6542 SS	$460	FCB 6548 SS	$475	FCB 6560 SS	$565

FCH 65 Channel.
Used with fabric/liquid waterproofing. This channel has a threaded tapered connection.

24" Channel	List	32" Channel	List	36" Channel	List	42" Channel	List	48" Channel	List	60" Channel	List
FCH 6524 SS	$340	FCH 6532 SS	$430	FCH 6536 SS	$460	FCH 6542 SS	$470	FCH 6548 SS	$485	FCH 6560 SS	$575

OC 65 Channel for [FT] series.
Used with fabric/liquid waterproofing. This channel has a no hub side outlet. See page 155 for installation details.

24" Channel	List	32" Channel	List	36" Channel	List	42" Channel	List	48" Channel	List	60" Channel	List
OC 6524 SS	$340	OC 6532 SS	$470	OC 6536 SS	$475	OC 6542 SS	$515	OC 6548 SS	$530	OC 6560 SS	$620

OCH 65 Channel.
Used with fabric/liquid waterproofing. This channel has a threaded tapered side outlet.

24" Channel	List	32" Channel	List	36" Channel	List	42" Channel	List	48" Channel	List	60" Channel	List
OCH 6524 SS	$485	OCH 6532 SS	$585	OCH 6536 SS	$615	OCH 6542 SS	$625	OCH 6548 SS	$640	OCH 6560 SS	$730

PARTS

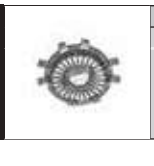

Component	List
HS 2	$5
Used with fixed channels, except OC 65, OCH 65, and when using the SA 25 grate.	

Component	List
TNAS	$45
Stainless Steel threaded nipple. Used with XC 65 channel.	

Component	List
CF 65	$35
Adjustable channel feet. Used with OC 65 and OCH 65 channel.	

Components

Channel and Parts for FX 65, FF 65, FCS 65, FCB 65, and FT series (used with channels on page 123)

(Fixed grate options shown, except FXTIF 65 (page 125), ST series (page 126), and 125 Series (page 127)

GRATES

EA 65 Grate: Offset Oval.

24" Grate	List	32" Grate	List	36" Grate	List	42" Grate	List	48" Grate	List	60" Grate	List
EA 6524 SS	$95	EA 6532 SS	$160	EA 6536 SS	$170	EA 6542 SS	$220	EA 6548 SS	$260	EA 6560 SS	$320
EA 6524 PS	$160	EA 6532 PS	$195	EA 6536 PS	$240	EA 6542 PS	$295	EA 6548 PS	$340	EA 6560 PS	$420
EA 6524 ORB	$160	EA 6532 ORB	$195	EA 6536 ORB	$240	EA 6542 ORB	$295	EA 6548 ORB	$340	EA 6560 ORB	$420
EA 6524 SB	$160	EA 6532 SB	$195	EA 6536 SB	$240	EA 6542 SB	$295	EA 6548 SB	$340	EA 6560 SB	$420
EA 6524 BK	$160	EA 6532 BK	$195	EA 6536 BK	$240	EA 6542 BK	$295	EA 6548 BK	$340	EA 6560 BK	$420

WA 65 Grate: Wedge Wire.

24" Grate	List	32" Grate	List	36" Grate	List	42" Grate	List	48" Grate	List	60" Grate	List
WA 6524 SS	$405	WA 6532 SS	$600	WA 6536 SS	$610	WA 6542 SS	$710	WA 6548 SS	$790	WA 6560 SS	$930
WA 6524 PS	$565	WA 6532 PS	$765	WA 6536 PS	$775	WA 6542 PS	$875	WA 6548 PS	$955	WA 6560 PS	$1085
WA 6524 ORB	$565	WA 6532 ORB	$765	WA 6536 ORB	$775	WA 6542 ORB	$875	WA 6548 ORB	$955	WA 6560 ORB	$1085
WA 6524 SB	$565	WA 6532 SB	$765	WA 6536 SB	$775	WA 6542 SB	$875	WA 6548 SB	$955	WA 6560 SB	$1085
WA 6524 BK	$565	WA 6532 BK	$765	WA 6536 BK	$775	WA 6542 BK	$875	WA 6548 BK	$955	WA 6560 BK	$1085

BA 65 Grate: Solid.

24" Grate	List	32" Grate	List	36" Grate	List	42" Grate	List	48" Grate	List	60" Grate	List
BA 6524 SS	$475	BA 6532 SS	$540	BA 6536 SS	$555	BA 6542 SS	$570	BA 6548 SS	$580	BA 6560 SS	$740
BA 6524 PS	$620	BA 6532 PS	$640	BA 6536 PS	$660	BA 6542 PS	$715	BA 6548 PS	$735	BA 6560 PS	$890
BA 6524 ORB	$620	BA 6532 ORB	$640	BA 6536 ORB	$660	BA 6542 ORB	$715	BA 6548 ORB	$735	BA 6560 ORB	$890
BA 6524 SB	$620	BA 6532 SB	$640	BA 6536 SB	$660	BA 6542 SB	$715	BA 6548 SB	$735	BA 6560 SB	$890
BA 6524 BK	$620	BA 6532 BK	$640	BA 6536 BK	$660	BA 6542 BK	$715	BA 6548 BK	$735	BA 6560 BK	$890

MA 65 Grate: Marc Newson.

32" Grate	List	36" Grate	List	42" Grate	List	48" Grate	List	60" Grate	List
MA 6532 SS	$285	MA 6536 SS	$320	MA 6542 SS	$375	MA 6548 SS	$425	MA 6560 SS	$605
MA 6532 PS	$435	MA 6536 PS	$470	MA 6542 PS	$525	MA 6548 PS	$605	MA 6560 PS	$755
MA 6532 ORB	$435	MA 6536 ORB	$470	MA 6542 ORB	$525	MA 6548 ORB	$605	MA 6560 ORB	$755
MA 6532 SB	$435	MA 6536 SB	$470	MA 6542 SB	$525	MA 6548 SB	$605	MA 6560 SB	$755
MA 6532 BK	$435	MA 6536 BK	$470	MA 6542 BK	$525	MA 6548 BK	$605	MA 6560 BK	$755

UA 65 Grate: Slotted.

24" Grate	List	32" Grate	List	36" Grate	List	42" Grate	List	48" Grate	List	60" Grate	List
UA 6524 SS	$95	UA 6532 SS	$160	UA 6536 SS	$170	UA 6542 SS	$220	UA 6548 SS	$260	UA 6560 SS	$320
UA 6524 PS	$160	UA 6532 PS	$195	UA 6536 PS	$240	UA 6542 PS	$295	UA 6548 PS	$340	UA 6560 PS	$420
UA 6524 ORB	$160	UA 6532 ORB	$195	UA 6536 ORB	$240	UA 6542 ORB	$295	UA 6548 ORB	$340	UA 6560 ORB	$420
UA 6524 SB	$160	UA 6532 SB	$195	UA 6536 SB	$240	UA 6542 SB	$295	UA 6548 SB	$340	UA 6560 SB	$420
UA 6524 BK	$160	UA 6532 BK	$195	UA 6536 BK	$240	UA 6542 BK	$295	UA 6548 BK	$340	UA 6560 BK	$420

LA 65 Grate: Tile Insert.

24" Grate	List	32" Grate	List	36" Grate	List	42" Grate	List	48" Grate	List	60" Grate	List
LA 6524 SS	$215	LA 6532 SS	$290	LA 6536 SS	$345	LA 6542 SS	$375	LA 6548 SS	$455	LA 6560 SS	$570
LA 6524 PS	$230	LA 6532 PS	$305	LA 6536 PS	$365	LA 6542 PS	$395	LA 6548 PS	$475	LA 6560 PS	$595
LA 6524 ORB	$230	LA 6532 ORB	$305	LA 6536 ORB	$365	LA 6542 ORB	$395	LA 6548 ORB	$475	LA 6560 ORB	$595
LA 6524 SB	$230	LA 6532 SB	$305	LA 6536 SB	$365	LA 6542 SB	$395	LA 6548 SB	$475	LA 6560 SB	$595
LA 6524 BK	$230	LA 6532 BK	$305	LA 6536 BK	$365	LA 6542 BK	$395	LA 6548 BK	$475	LA 6560 BK	$595

SA 25 Grate: Wedge Wire. Grate requires a CI 25 (see below) and will fit into channels shown on page 123, except the XC 65 channel

32" Grate	List	36" Grate	List	42" Grate	List	48" Grate	List	60" Grate	List
SA 2532 SS	$515	SA 2536 SS	$550	SA 2542 SS	$700	SA 2548 SS	$710	SA 2560 SS	$825
SA 2532 PS	$645	SA 2536 PS	$680	SA 2542 PS	$800	SA 2548 PS	$810	SA 2560 PS	$975
SA 2532 ORB	$645	SA 2536 ORB	$680	SA 2542 ORB	$800	SA 2548 ORB	$810	SA 2560 ORB	$975
SA 2532 SB	$645	SA 2536 SB	$680	SA 2542 SB	$800	SA 2548 SB	$810	SA 2560 SB	$975
SA 2532 BK	$645	SA 2536 BK	$680	SA 2542 BK	$800	SA 2548 BK	$810	SA 2560 BK	$975

PARTS

CI 25 Channel Insert

24" Grate	List
CI 2532	$50
CI 2536	$75
CI 2542	$110
CI 2548	$145
CI 2560	$155

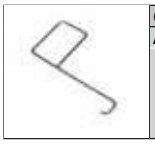

Component	List
AKEY	$5
Lift-Out Key Used with SA 25, EA 65, WA 65, BA 65, UA 65, and LA 65 Grates	

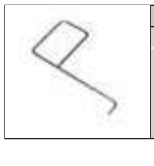

Component	List
DKEY	$5
Lift-Out Key Used with MA 65	

Components

FXTIF 65

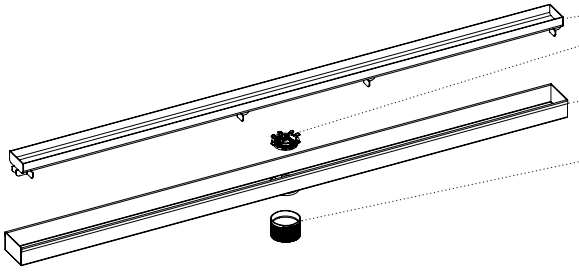

Finishes	
SS	Satin Stainless
PS	Polished Stainless
ORB	Oil Rubbed Bronze
SB	Satin Bronze
BK	Matte Black

GRATE

TA 65 Tile Insert

20" Grate	List	40" Grate	List	48" Grate	List	60" Grate	List
TA 6520 SS	$315	TA 6540 SS	$540	TA 6548 SS	$660	TA 6560 SS	$840
TA 6520 PS	$350	TA 6540 PS	$615	TA 6548 PS	$735	TA 6560 PS	$915
TA 6520 ORB	$350	TA 6540 ORB	$615	TA 6548 ORB	$735	TA 6560 ORB	$915
TA 6520 SB	$350	TA 6540 SB	$615	TA 6548 SB	$735	TA 6560 SB	$915
TA 6520 BK	$350	TA 6540 BK	$615	TA 6548 BK	$735	TA 6560 BK	$915
(19 ⅞" L x 2 ½" W x 1 ½" H)		(39 ⅞" L x 2 ½" W x 1 ½" H)		(47 ⅞" L x 2 ½" W x 1 ½" H)		(59 ⅞" L x 2 ½" W x 1 ½" H)	

CHANNEL

IC 65

20" Grate	List	40" Grate	List	48" Grate	List	60" Grate	List
IC 6520 SS	$70	IC 6540 SS	$125	IC 6548 SS	$170	IC 6560 SS	$190
IC 6520 PS	$80	IC 6540 PS	$135	IC 6548 PS	$180	IC 6560 PS	$225
IC 6520 ORB	$80	IC 6540 ORB	$135	IC 6548 ORB	$180	IC 6560 ORB	$225
IC 6520 SB	$80	IC 6540 SB	$135	IC 6548 SB	$180	IC 6560 SB	$225
IC 6520 BK	$80	IC 6540 BK	$135	IC 6548 BK	$180	IC 6560 BK	$225
(20 ⅛" L x 2 ⅞" W x 1 9/16" H)		(40 ⅛" L x 2 ⅞" W x 1 9/16" H)		(48 ⅛" L x 2 ⅞" W x 1 9/16" H)		(60 ⅛" L x 2 ⅞" W x 1 9/16" H)	

PARTS

Component	List
TNAS	$45
Stainless Steel threaded nipple. used with C 65 channel	

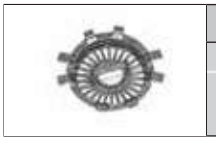

Component	List
HS 2	$5
2" hair strainer	

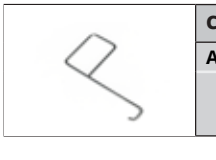

Component	List
AKEY	$5
Lift-Out Key Used with TA 65 Grate	

Components

FFST, FCSST, and FCBST

CHANNEL

CST 65 Slot Drain Channel for [FF] series. Includes removable cleanout.
Used with fabric/liquid waterproofing.

24" Channel	List	32" Channel	List	36" Channel	List	42" Channel	List	48" Channel	List	60" Channel	List
CST 6524 SS	$395	CST 6532 SS	$490	CST 6536 SS	$545	CST 6542 SS	$590	CST 6548 SS	$650	CST 6560 SS	$750

CSST 65 Slot Drain Channel for [FCS] series. Includes removable cleanout.
Used with fabric/liquid waterproofing.

24" Channel	List	32" Channel	List	36" Channel	List	42" Channel	List	48" Channel	List	60" Channel	List
CSST 6524 SS	$485	CSST 6532 SS	$590	CSST 6536 SS	$665	CSST 6542 SS	$750	CSST 6548 SS	$845	CSST 6560 SS	$955

CBST 65 Slot Drain Channel for [FCB] series. Includes removable cleanout and threaded nipple.
Used with traditional and fabric/liquid waterproofing. This channel includes threaded nipple. See page 157 for installation details.

24" Channel	List	32" Channel	List	36" Channel	List	42" Channel	List	48" Channel	List	60" Channel	List
CBST 6524 SS	$440	CBST 6532 SS	$535	CBST 6536 SS	$590	CBST 6542 SS	$635	CBST 6548 SS	$695	FCB 6560 SS	$795

SLOT

SLOT Slot Insert

24" Slot Insert	List	32" Slot Insert	List	36" Slot Insert	List	42" Slot Insert	List	48" Slot Insert	List	60" Slot Insert	List
SLOT 6524 SS	$105	SLOT 6532 SS	$135	SLOT 6536 SS	$145	SLOT 6542 SS	$195	SLOT 6548 SS	$235	SLOT 6560 SS	$285
SLOT 6524 PS	$135	SLOT 6532 PS	$170	SLOT 6536 PS	$195	SLOT 6542 PS	$250	SLOT 6548 PS	$295	SLOT 6560 PS	$360
SLOT 6524 ORB	$135	SLOT 6532 ORB	$170	SLOT 6536 ORB	$195	SLOT 6542 ORB	$250	SLOT 6548 ORB	$295	SLOT 6560 ORB	$360
SLOT 6524 SB	$135	SLOT 6532 SB	$170	SLOT 6536 SB	$195	SLOT 6542 SB	$250	SLOT 6548 SB	$295	SLOT 6560 SB	$360
SLOT 6524 BK	$135	SLOT 6532 BK	$170	SLOT 6536 BK	$195	SLOT 6542 BK	$250	SLOT 6548 BK	$295	SLOT 6560 BK	$360

PARTS

Component	List
WKEY	$5
Lift-Out Key Used with Slot Insert	

Component	List
HS 2	$5
2" hair strainer	

Components

FXAS 125, FFAS 125, FCSAS 125

Finishes	
SS	Satin Stainless
PS	Polished Stainless
ORB	Oil Rubbed Bronze
SB	Satin Bronze
BK	Matte Black

GRATE

SA 125
Wedge Wire

32" Grate	List	36" Grate	List	42" Grate	List	48" Grate	List	60" Grate	List
SA 12532 SS	$795	SA 12536 SS	$895	SA 12542 SS	$945	SA 12548 SS	$995	SA 12560 SS	$1195
SA 12532 PS	$1095	SA 12536 PS	$1195	SA 12542 PS	$1245	SA 12548 PS	$1295	SA 12560 PS	$1495
SA 12532 ORB	$1095	SA 12536 ORB	$1195	SA 12542 ORB	$1245	SA 12548 ORB	$1295	SA 12560 ORB	$1495
SA 12532 SB	$1095	SA 12536 SB	$1195	SA 12542 SB	$1245	SA 12548 SB	$1295	SA 12560 SB	$1495
SA 12532 BK	$1095	SA 12536 BK	$1195	SA 12542 BK	$1245	SA 12548 BK	$1295	SA 12560 BK	$1495
(32 ⅛" L x 2 ⅞" W x 1" H) - 8 lbs		(36 ⅛" L x 2 ⅞" W x 1" H) - 10 lbs		(42 ⅛" L x 2 ⅞" W x 1" H) - 12 lbs		(42 ⅛" L x 2 ⅞" W x 1" H) - 12 lbs		(42 ⅛" L x 2 ⅞" W x 1" H) 12 lbs	

CHANNELS

XC 125 Channel for **[FX]** series.
Used with traditional waterproofing. Channel requires a threaded nipple (TN4A), see below. See page 149 for installation details.

32" Channel	List	36" Channel	List	42" Channel	List	48" Channel	List	60" Channel	List
XC 12532 SS	$370	XC 12536 SS	$390	XC 12542 SS	$410	XC 12548 SS	$485	XC 12560 SS	$510
XC 12532 PS	$470	XC 12536 PS	$490	XC 12542 PS	$510	XC 12548 PS	$585	XC 12560 PS	$610
XC 12532 ORB	$470	XC 12536 ORB	$490	XC 12542 ORB	$510	XC 12548 ORB	$585	XC 12560 ORB	$610
XC 12532 SB	$470	XC 12536 SB	$490	XC 12542 SB	$510	XC 12548 SB	$585	XC 12560 SB	$610
XC 12532 BK	$470	XC 12536 BK	$490	XC 12542 BK	$510	XC 12548 BK	$585	XC 12560 BK	$610
(32 ⅛" L x 2 ⅞" W x 1" H) - 8 lbs		(36 ⅛" L x 2 ⅞" W x 1" H) - 10 lbs		(42 ⅛" L x 2 ⅞" W x 1" H) - 12 lbs		(42 ⅛" L x 2 ⅞" W x 1" H) - 12 lbs		(42 ⅛" L x 2 ⅞" W x 1" H) 12 lbs	

FC 125 Channel for **[FF]** series.
Used with fabric/liquid waterproofing. See page 151 for installation details.

32" Channel	List	36" Channel	List	42" Channel	List	48" Channel	List	60" Channel	List
FC 12532 SS	$425	FC 12536 SS	$455	FC 12542 SS	$490	FC 12548 SS	$540	FC 12560 SS	$580

FCS 125 Channel for **[FCS]** series.
Used with fabric/liquid waterproofing. See page 153 for installation details.

32" Channel	List	36" Channel	List	42" Channel	List	48" Channel	List	60" Channel	List
FCS 12532 SS	$655	FCS 12536 SS	$710	FCS 12542 SS	$775	FCS 12548 SS	$855	FCS 12560 SS	$950

PARTS

Component	List
TN4A	$200
Threaded nipple for XC 125 Channel	

Component	List
HS 4	$10
4" Hair Strainer for XC 125 Channel	

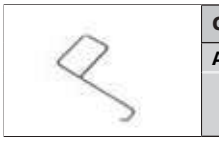

Component	List
AKEY	$5
Lift-Out Key Used with SA 125 Grate	

Center Drain
Components

Components

4"x4" Center Drains

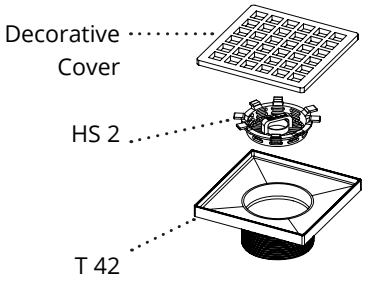

DECORATIVE COVERS

Criss-Cross	List
XS 4-SS	$85
XS 4-PS	$115
XS 4-ORB	$115
XS 4-SB	$115
XS 4-BK	$115
(3 7/8" L x 3 7/8" W x 3/16" H) - 1 lbs	

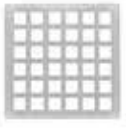

Squares	List
QS 4-SS	$85
QS 4-PS	$115
QS 4-ORB	$115
QS 4-SB	$115
QS 4-BK	$115
(3 7/8" L x 3 7/8" W x 3/16" H) - 1 lbs	

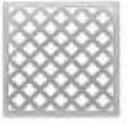

Moor	List
MS 4-SS	$85
MS 4-PS	$115
MS 4-ORB	$115
MS 4-SB	$115
MS 4-BK	$115
(3 7/8" L x 3 7/8" W x 3/16" H) - 1 lbs	

Link	List
KS 4-SS	$85
KS 4-PS	$115
KS 4-ORB	$115
KS 4-SB	$115
KS 4-BK	$115
(3 7/8" L x 3 7/8" W x 3/16" H) - 1 lbs	

Weave	List
VS 4-SS	$85
VS 4-PS	$115
VS 4-ORB	$115
VS 4-SB	$115
VS 4-BK	$115
(3 7/8" L x 3 7/8" W x 3/16" H) - 1 lbs	

Lines	List
NS 4-SS	$85
NS 4-PS	$115
NS 4-ORB	$115
NS 4-SB	$115
NS 4-BK	$115
(3 7/8" L x 3 7/8" W x 3/16" H) - 1 lbs	

Wedge Wire	List
WS 4-SS	$150
WS 4-PS	$195
WS 4-ORB	$195
WS 4-SB	$195
WS 4-BK	$195
(3 7/8" L x 3 7/8" W x 3/16" H) - 1 lbs	

THROAT

4x4 - 2" Throat	List
T 42-SS	$160
T 42-PS	$210
T 42-ORB	$210
T 42-SB	$210
T 42-BK	$210
(4" L x 4" W x 1 13/16" H) - 2 lbs	

PARTS

Component	List
HS 2	$5
2" Hair Strainer for T 42 throat	

Component	List
MG 4	$10
Mud guard for 4"x4" throat	

Component	List
DKEY	$5
Lift-Out Key	

Component	List
WKEY	$5
Lift-Out Key for WS 4 Decorative Cover	

*See page 137-138 for drain bodies

Components

5"x5" Center Drains

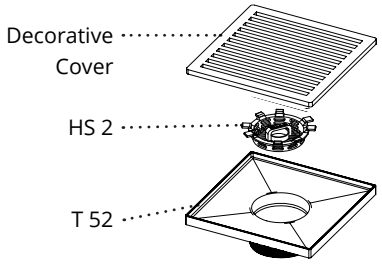

DECORATIVE COVERS

Criss-Cross	List
XS 5-SS	$95
XS 5-PS	$125
XS 5-ORB	$125
XS 5-SB	$125
XS 5-BK	$125
(4 7/8" L x 4 7/8" W x 3/16" H) - 1 lbs	

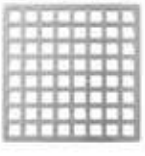

Squares	List
QS 5-SS	$95
QS 5-PS	$125
QS 5-ORB	$125
QS 5-SB	$125
QS 5-BK	$125
(4 7/8" L x 4 7/8" W x 3/16" H) - 1 lbs	

Moor	List
MS 5-SS	$95
MS 5-PS	$125
MS 5-ORB	$125
MS 5-SB	$125
MS 5-BK	$125
(4 7/8" L x 4 7/8" W x 3/16" H) - 1 lbs	

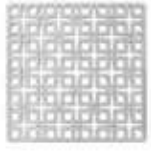

Link	List
KS 5-SS	$95
KS 5-PS	$125
KS 5-ORB	$125
KS 5-SB	$125
KS 5-BK	$125
(4 7/8" L x 4 7/8" W x 3/16" H) - 1 lbs	

Weave	List
VS 5-SS	$95
VS 5-PS	$125
VS 5-ORB	$125
VS 5-SB	$125
VS 5-BK	$125
(4 7/8" L x 4 7/8" W x 3/16" H) - 1 lbs	

Lines	List
NS 5-SS	$95
NS 5-PS	$125
NS 5-ORB	$125
NS 5-SB	$125
NS 5-BK	$125
(4 7/8" L x 4 7/8" W x 3/16" H) - 1 lbs	

Wedge Wire	List
WS 5-SS	$170
WS 5-PS	$195
WS 5-ORB	$195
WS 5-SB	$195
WS 5-BK	$195
(4 7/8" L x 4 7/8" W x 3/16" H) - 1 lbs	

THROAT

5x5 - 2" Throat	List
T 52-SS	$180
T 52-PS	$235
T 52-ORB	$235
T 52-SB	$235
T 52-BK	$235
(5" L x 5" W x 1 13/16" H) - 2 lbs	

5x5 - 4" Throat	List
T 54-SS	$185
T 54-PS	$240
T 54-ORB	$240
T 54-SB	$240
T 54-BK	$240
(5" L x 5" W x 1 13/16" H) - 2 lbs	

PARTS

Component	List
HS 2	$5
2" Hair Strainer for T 52 throat	

Component	List
HS 4	$10
4" hair strainer for T 54 throat	

Component	List
MG 5	$10
Mud guard for 5"x5" throat	

Component	List
DKEY	$5
Lift-Out Key	

Component	List
WKEY	$5
Lift-Out Key for WS 5 Decorative Cover	

*See page 137-138 for drain bodies

Components

5" Round Center Drains

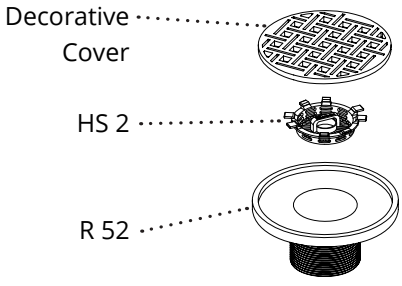

DECORATIVE COVERS

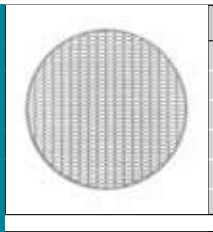

Wedge Wire	List
RWS 5-SS	$170
RWS 5-PS	$195
RWS 5-ORB	$195
RWS 5-SB	$195
RWS 5-BK	$195
(4 7/16" L x 4 7/16" W x 3/16" H) - 1 lbs	

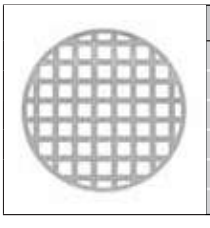

Squares	List
RQS 5-SS	$95
RQS 5-PS	$125
RQS 5-ORB	$125
RQS 5-SB	$125
RQS 5-BK	$125
(4 7/16" L x 4 7/16" W x 3/16" H) - 1 lbs	

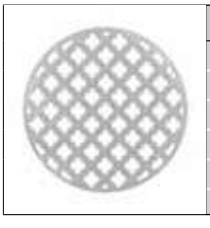

Moor	List
RMS 5-SS	$95
RMS 5-PS	$125
RMS 5-ORB	$125
RMS 5-SB	$125
RMS 5-BK	$125
(4 7/16" L x 4 7/16" W x 3/16" H) - 1 lbs	

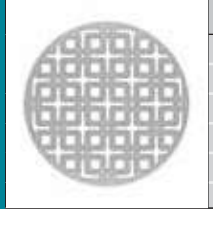

Link	List
RKS 5-SS	$95
RKS 5-PS	$125
RKS 5-ORB	$125
RKS 5-SB	$125
RKS 5-BK	$125
(4 7/16" L x 4 7/16" W x 3/16" H) - 1 lbs	

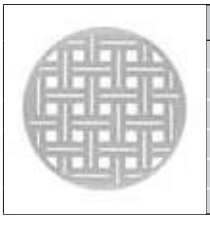

Weave	List
RVS 5-SS	$95
RVS 5-PS	$125
RVS 5-ORB	$125
RVS 5-SB	$125
RVS 5-BK	$125
(4 7/16" L x 4 7/16" W x 3/16" H) - 1 lbs	

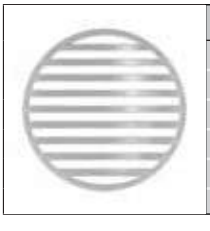

Lines	List
RNS 5-SS	$95
RNS 5-PS	$125
RNS 5-ORB	$125
RNS 5-SB	$125
RNS 5-BK	$125
(4 7/16" L x 4 7/16" W x 3/16" H) - 1 lbs	

THROAT

5x5 - 2" Throat	List
R 52-SS	$180
R 52-PS	$235
R 52-ORB	$235
R 52-SB	$235
R 52-BK	$235
(5" L x 5" W x 1 13/16" H) - 2 lbs	

5x5 - 4" Throat	List
R 54-SS	$185
R 54-PS	$240
R 54-ORB	$240
R 54-SB	$240
R 54-BK	$240
(5" L x 5" W x 1 13/16" H) - 2 lbs	

PARTS

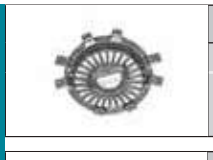

Component	List
HS 2	$5
2" Hair Strainer for T 52 throat	

Component	List
HS 4	$10
4" hair strainer for T 54 throat	

Component	List
RMG 5	$10
Mud guard for 5"x5" throat	

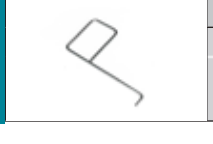

Component	List
DKEY	$5
Lift-Out Key	

Component	List
WKEY	$5
Lift-Out Key for RWS 5 Decorative Cover	

*See page 137-138 for drain bodies

Universal Infinity Drain™
Components

Components

NEW Universal Infinity Drain™

GRATE

QA 65
Squares

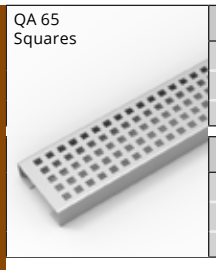

24" Grate	List	30" Grate	List	32" Grate	List	36" Grate	List
QA 6524 SS	$95	QA 6530 SS	$110	QA 6532 SS	$115	QA 6536 SS	$125
QA 6524 PS	$115	QA 6530 PS	$130	QA 6532 PS	$135	QA 6536 PS	$145
(24 ⅛" L x 2 ⅞" W x 1" H)		(30 ⅛" L x 2 ⅞" W x 1" H)		(32 ⅛" L x 2 ⅞" W x 1" H)		(36 ⅛" L x 2 ⅞" W x 1" H)	

42" Grate	List	48" Grate	List	54" Grate	List	60" Grate	List
QA 6542 SS	$135	QA 6548 SS	$150	QA 6554 SS	$170	QA 6560 SS	$190
QA 6542 PS	$155	QA 6548 PS	$170	QA 6554 PS	$190	QA 6560 PS	$210
(42 ⅛" L x 2 ⅞" W x 1" H)		(48 ⅛" L x 2 ⅞" W x 1" H)		(54 ⅛" L x 2 ⅞" W x 1" H)		(60 ⅛" L x 2 ⅞" W x 1" H)	

NA 65
Tile Insert

24" Grate	List	30" Grate	List	32" Grate	List	36" Grate	List
NA 6524 SS	$145	NA 6530 SS	$160	NA 6532 SS	$165	NA 6536 SS	$175
(24 ⅛" L x 2 ⅞" W x 1" H)		(30 ⅛" L x 2 ⅞" W x 1" H)		(32 ⅛" L x 2 ⅞" W x 1" H)		(36 ⅛" L x 2 ⅞" W x 1" H)	

42" Grate	List	48" Grate	List	54" Grate	List	60" Grate	List
NA 6542 SS	$185	NA 6548 SS	$200	NA 6554 SS	$220	NA 6560 SS	$240
(42 ⅛" L x 2 ⅞" W x 1" H)		(48 ⅛" L x 2 ⅞" W x 1" H)		(54 ⅛" L x 2 ⅞" W x 1" H)		(60 ⅛" L x 2 ⅞" W x 1" H)	

CLAMPING COLLAR

CC
Clamping Collar

Description	Model	List
24" x 1/2" Clamping Collar	**CCL 24 SS**	$55
	CCL 24 PS	$60
30" x 1/2" Clamping Collar	**CCL 30 SS**	$60
	CCL 30 PS	$65
32" x 1/2" Clamping Collar	**CCL 32 SS**	$60
	CCL 32 PS	$65
36" x 1/2" Clamping Collar	**CCL 36 SS**	$60
	CCL 36 PS	$65
42" x 1/2" Clamping Collar	**CCL 42 SS**	$70
	CCL 42 PS	$75
48" x 1/2" Clamping Collar	**CCL 48 SS**	$75
	CCL 48 PS	$80
54" x 1/2" Clamping Collar	**CCL 54 SS**	$75
	CCL 54 PS	$80
60" x 1/2" Clamping Collar	**CCL 60 SS**	$75
	CCL 60 PS	$80

Description	Model	List
24" x 1" Clamping Collar	**CCH 24 SS**	$55
	CCH 24 PS	$60
30" x 1" Clamping Collar	**CCH 30 SS**	$60
	CCH 30 PS	$65
32" x 1" Clamping Collar	**CCH 32 SS**	$60
	CCH 32 PS	$65
36" x 1" Clamping Collar	**CCH 36 SS**	$60
	CCH 36 PS	$65
42" x 1" Clamping Collar	**CCH 42 SS**	$70
	CCH 42 PS	$75
48" x 1" Clamping Collar	**CCH 48 SS**	$75
	CCH 48 PS	$80
54" x 1" Clamping Collar	**CCH 54 SS**	$75
	CCH 54 PS	$80
60" x 1" Clamping Collar	**CCH 60 SS**	$75
	CCH 60 PS	$80

CHANNEL

UC
Universal Infinity Drain Channel

Description	Channel	Model	List
24" Channel for Universal Infinity Drain	ABS Channel	**UC 24-ABS**	$50.00
	Hot Mop Channel	**UC 24-HMP**	$65.00
	PVC Channel	**UC 24-PVC**	$50.00
30" Channel for Universal Infinity Drain	ABS Channel	**UC 30-ABS**	$55.00
	Hot Mop Channel	**UC 30-HMP**	$70.00
	PVC Channel	**UC 30-PVC**	$55.00
32" Channel for Universal Infinity Drain	ABS Channel	**UC 32-ABS**	$60.00
	Hot Mop Channel	**UC 32-HMP**	$75.00
	PVC Channel	**UC 32-PVC**	$60.00
36" Channel for Universal Infinity Drain	ABS Channel	**UC 36-ABS**	$65.00
	Hot Mop Channel	**UC 36-HMP**	$80.00
	PVC Channel	**UC 36-PVC**	$65.00
42" Channel for Universal Infinity Drain	ABS Channel	**UC 42-ABS**	$70.00
	Hot Mop Channel	**UC 42-HMP**	$85.00
	PVC Channel	**UC 42-PVC**	$70.00
48" Channel for Universal Infinity Drain	ABS Channel	**UC 48-ABS**	$75.00
	Hot Mop Channel	**UC 48-HMP**	$90.00
	PVC Channel	**UC 48-PVC**	$75.00
54" Channel for Universal Infinity Drain	ABS Channel	**UC 54-ABS**	$80.00
	Hot Mop Channel	**UC 54-HMP**	$95.00
	PVC Channel	**UC 54-PVC**	$80.00
60" Channel for Universal Infinity Drain	ABS Channel	**UC 60-ABS**	$85.00
	Hot Mop Channel	**UC 60-HMP**	$100.00
	PVC Channel	**UC 60-PVC**	$85.00

Stainless Steel Shower Base

Components

Components

NEW Stainless Steel Shower Base - Center Drain

DECORATIVE COVERS

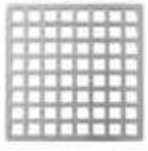

Squares	List
QS 5-SS	$95
QS 5-PS	$125
QS 5-ORB	$125
QS 5-SB	$125
QS 5-BK	$125

Wedge Wire	List
WS 5-SS	$170
WS 5-PS	$195
WS 5-ORB	$195
WS 5-SB	$195
WS 5-BK	$195

Lines	List
NS 5-SS	$95
NS 5-PS	$125
NS 5-ORB	$125
NS 5-SB	$125
NS 5-BK	$125

Tile Insert	List
BTI 5 SS	$170
BTI 5 PS	$205
BTI 5 ORB	$205
BTI 5 SB	$205
BTI 5 BK	$205

PARTS

Component	List
BGF 5	$20
5" x 5" Grate frame for Stainless Steel Shower Base	

SHOWER BASE

Drain Location		Threshold	Model	Finish	List
5"x 5" Square Drain with **Center Location**		Curbed	**BCC-3060-SS**	Satin Stainless	$3395
			BCC-3060-PS	Polished Stainless	$3395
			BCC-3060-ORB	Oil Rubbed Bronze	$3395
			BCC-3060-SB	Satin Bronze	$3395
			BCC-3060-BK	Matte Black	$3395
		Barrier Free	**BCC-H-3060-SS**	Satin Stainless	$3395
			BCC-H-3060-PS	Polished Stainless	$3395
			BCC-H-3060-ORB	Oil Rubbed Bronze	$3395
			BCC-H-3060-SB	Satin Bronze	$3395
			BCC-H-3060-BK	Matte Black	$3395
5"x 5" Square Drain with **Left Location**		Curbed	**BCL-3060-SS**	Satin Stainless	$3395
			BCL-3060-PS	Polished Stainless	$3395
			BCL-3060-ORB	Oil Rubbed Bronze	$3395
			BCL-3060-SB	Satin Bronze	$3395
			BCL-3060-BK	Matte Black	$3395
		Barrier Free	**BCL-H-3060-SS**	Satin Stainless	$3395
			BCL-H-3060-PS	Polished Stainless	$3395
			BCL-H-3060-ORB	Oil Rubbed Bronze	$3395
			BCL-H-3060-SB	Satin Bronze	$3395
			BCL-H-3060-BK	Matte Black	$3395
5"x 5" Square Drain with **Right Location**		Curbed	**BCR-3060-SS**	Satin Stainless	$3395
			BCR-3060-PS	Polished Stainless	$3395
			BCR-3060-ORB	Oil Rubbed Bronze	$3395
			BCR-3060-SB	Satin Bronze	$3395
			BCR-3060-BK	Matte Black	$3395
		Barrier Free	**BCR-H-3060-SS**	Satin Stainless	$3395
			BCR-H-3060-PS	Polished Stainless	$3395
			BCR-H-3060-ORB	Oil Rubbed Bronze	$3395
			BCR-H-3060-SB	Satin Bronze	$3395
			BCR-H-3060-BK	Matte Black	$3395

Components

NEW Stainless Steel Shower Base - Linear Drain

GRATE

UA 65
Slotted

25" Grate	List	57" Grate	List
UA 6525 SS	$305	**UA 6557 SS**	$305
UA 6525 PS	$405	**UA 6557 PS**	$405
UA 6525 ORB	$405	**UA 6557 ORB**	$405
UA 6525 SB	$405	**UA 6557 SB**	$405
UA 6525 BK	$405	**UA 6557 BK**	$405
(25 ⅛" L x 2 ⅜" W x 1" H) 8 lbs		(57 ⅛" L x 2 ⅞" W x 1" H) 10 lbs	

LA 65
Tile Insert

25" Grate	List	57" Grate	List
LA 6525 SS	$400	**LA 6557 SS**	$400
LA 6525 PS	$420	**LA 6557 PS**	$420
LA 6525 ORB	$420	**LA 6557 ORB**	$420
LA 6525 SB	$420	**LA 6557 SB**	$420
LA 6525 BK	$420	**LA 6557 BK**	$420
(25 ⅛" L x 2 ⅜" W x 1" H) 8 lbs		(57 ⅛" L x 2 ⅞" W x 1" H) 10 lbs	

SA 65
Wedge Wire

25" Grate	List	57" Grate	List
SA 6525 SS	$800	**SA 6557 SS**	$800
SA 6525 PS	$940	**SA 6557 PS**	$940
SA 6525 ORB	$940	**SA 6557 ORB**	$940
SA 6525 SB	$940	**SA 6557 SB**	$940
SA 6525 BK	$940	**SA 6557 BK**	$940
(25 ⅛" L x 2 ⅜" W x 1" H) 8 lbs		(57 ⅛" L x 2 ⅞" W x 1" H) 10 lbs	

SHOWER BASE

Drain Location		Threshold	Model	Finish	List
Linear Drain with **Back Wall Location**		Curbed	**BLC-3060-SS**	Satin Stainless	$2895
			BLC-3060-PS	Polished Stainless	$2895
			BLC-3060-ORB	Oil Rubbed Bronze	$2895
			BLC-3060-SB	Satin Bronze	$2895
			BLC-3060-BK	Matte Black	$2895
		Barrier Free	**BLC-H-3060-SS**	Satin Stainless	$2895
			BLC-H-3060-PS	Polished Stainless	$2895
			BLC-H-3060-ORB	Oil Rubbed Bronze	$2895
			BLC-H-3060-SB	Satin Bronze	$2895
			BLC-H-3060-BK	Matte Black	$2895
Linear Drain with **Left Wall Location**		Curbed	**BLL-3060-SS**	Satin Stainless	$2895
			BLL-3060-PS	Polished Stainless	$2895
			BLL-3060-ORB	Oil Rubbed Bronze	$2895
			BLL-3060-SB	Satin Bronze	$2895
			BLL-3060-BK	Matte Black	$2895
		Barrier Free	**BLL-H-3060-SS**	Satin Stainless	$2895
			BLL-H-3060-PS	Polished Stainless	$2895
			BLL-H-3060-ORB	Oil Rubbed Bronze	$2895
			BLL-H-3060-SB	Satin Bronze	$2895
			BLL-H-3060-BK	Matte Black	$2895
Linear Drain with **Right Wall Location**		Curbed	**BLR-3060-SS**	Satin Stainless	$2895
			BLR-3060-PS	Polished Stainless	$2895
			BLR-3060-ORB	Oil Rubbed Bronze	$2895
			BLR-3060-SB	Satin Bronze	$2895
			BLR-3060-BK	Matte Black	$2895
	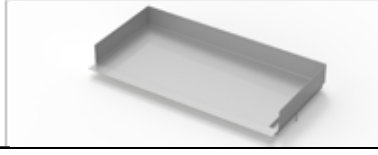	Barrier Free	**BLR-H-3060-SS**	Satin Stainless	$2895
			BLR-H-3060-PS	Polished Stainless	$2895
			BLR-H-3060-ORB	Oil Rubbed Bronze	$2895
			BLR-H-3060-SB	Satin Bronze	$2895
			BLR-H-3060-BK	Matte Black	$2895

Drain Bodies and Bonded Flanges

	Model	Description	Lbs	List
	CDI 22	Clamp Down Drain, **Cast Iron,** No Hub 2” Throat, 2” No Hub Outlet, 3 3/4” width.	5	$65
	CDIH 22	Clamp Down Drain for Hot Mop, **Cast Iron,** No Hub 2” Throat, 2” No Hub Outlet, 3 3/4” width.	5	$65
	CDI 42	Clamp Down Drain, **Cast Iron,** 4" Throat, 2" No Hub Outlet, 8” overall diameter	8	$100
	CDI 43/ CDI 43W	Clamp Down Drain, **Cast Iron,** 4" Throat, 3" No Hub Outlet, 8” overall diameter	9	$110
	CDA 22	Clamp Down Drain, **ABS,** 2" Throat, 2" Outlet, 3 3/4” width. *Outlet fits over 2” and inside 3” schedule 40 DWV pipe	2	$50
	CDA 42	Clamp Down Drain, **ABS,** 4" Throat, 2" Outlet, 8” overall diameter *Outlet fits over 2” and inside 3” schedule 40 DWV pipe	3	$125
	CDA 43/ CDP 43W	Clamp Down Drain, **ABS,** 4" Throat, 3" Outlet, 8” overall diameter *Outlet fits over 3” and inside 4” schedule 40 DWV pipe	4	$110
	CDP 22	Clamp Down Drain, **PVC,** 2" Throat, 2" Outlet, 3 3/4” width. *Outlet fits over 2” and inside 3” schedule 40 DWV pipe	2	$50
	CDP 42/ CDP 42W	Clamp Down Drain, **PVC,** 4" Throat, 2" Outlet, 8” overall diameter *Outlet fits over 2” and inside 3” schedule 40 DWV pipe	3	$125
	CDP 43/ CDP 43W	Clamp Down Drain, **PVC,** 4" Throat, 3" Outlet, 8” overall diameter *Outlet fits over 3” and inside 4” schedule 40 DWV pipe	3	$110
	CDIT 22	Clamp Down Drain, **Cast Iron,** 2" Throat, 2" threaded outlet, 3 3/4” width.	4	$65
	CDIT 42	Clamp Down Drain, **Cast Iron,** 4" Throat, 2" threaded outlet, 8” overall diameter	8	$100
	CDIT 43	Clamp Down Drain, **Cast Iron,** 4" Throat, 3" threaded outlet, 8” overall diameter	8	$110

Drain Bodies and Bonded Flanges

	Model	Description	Lbs	List
	CDIB 22	Clamp Down Drain, Cast Iron, No Hub 2” Throat, 2” No Hub Outlet, 6 1/2” overall diameter	5	$65
	CDI 44	Clamp Down Drain, Cast Iron, 4” Throat, 4” No Hub Outlet, 8” overall diameter	12	$110
	CDIC 22	Clamp Down Drain, Cast Iron, 2” Throat, 2” Inside Caulk Outlet, 6 1/2” overall diameter	4	$65
	CDIC 42	Clamp Down Drain, Cast Iron, 4" Throat, 2" Inside Caulk Outlet, 8” overall diameter	8	$100
	CDIC 43	Clamp Down Drain, Cast Iron, 4" Throat, 3" Inside Caulk Outlet, 8” overall diameter	8	$110
	CDIS 22	Clamp Down Drain, Cast Iron, Integrated Trap 2" Throat, 2" Threaded Side Outlet, 6 3/4” overall diameter, overall height of drain body 5 3/16”	10	$110
	CDIS 42	Clamp Down Drain, Cast Iron, Integrated Trap 4" Throat, 2" Threaded Side Outlet, 8” overall diameter, overall height of drain body 5 3/16”	12	$275
	CDIQ 42	Clamp Down Drain, Cast Iron, Side Outlet No trap 4" Throat, 2" Outlet, 8” overall diameter, overall height of drain body 4”	9	$200
	BFA 22	Bonded Flange, ABS Drain, 2" Throat fits 2", 3", and 4" Outlet, 12” overall diameter	2	$100
	BFP 22	Bonded Flange, PVC Drain, 2” Throat fits 2”, 3”, and 4” Outlet, 12” overall diameter	2	$100
	BFA 42	Bonded Flange, ABS Drain, 4” Throat fits 2”, 3”, and 4” Outlet, 12” overall diameter	2	$100
	BFP 42	Bonded Flange, PVC Drain, 4" Throat, fits 2", 3", and 4" Outlet, 12” overall diameter	2	$100
	BFS 22	Bonded Flange, Stainless Steel Drain, 2” Throat, 2” Outlet, 10” overall diameter	3	$195
	BFS 42	Bonded Flange, Stainless Steel Drain, 4” Throat, 2” Outlet, 10” overall diameter	4	$195

Parts

	Model	Description	List
	UCP 2	Universal 2" Clamping Plate, 6 1/2” overall diameter x 2” throat. Allows adaptation to hot mop type drain bodies; Oatey 151, EZ test, and Frank Pattern Instant Set. Works with 2” threaded nipple TNAS or S50 in S Series + FX Series products (except FX 125).	$75
	UCP 4	Universal 4" Clamping Plate, 8” overall diameter x 4” throat. Allows adaptation to Zurn, Smith, Wade, Watts, Mifab, and Josam type 8” diameter clamping drain bodies for High Flow Strainers.	$110
	UCP 42	Universal 4” x 2” Reducing Clamping Plate. Adapts 8” Diameter body to 2” throat.	$110
	TNAS	1 1/2” Length x 2” Diameter straight threaded nipple for S-AS 65, S-DGAS 65, S-TIFAS 65 and all FX series except FX 125.	$45
	TNAS-2	2” Length x 2” Diameter Straight Threaded Rescue nipple. All stainless steel S-AS 65, S-DGAS 65, S-TIFAS 65 and all FX series except FX 125.	$70
	TNAS-3	3” Length x 2” Diameter Straight Threaded Rescue nipple. All stainless steel S-AS 65, S-DGAS 65, S-TIFAS 65 and all FX series except FX 125.	$75
	TNAS-4	4” Length x 2” Diameter Straight Threaded Rescue nipple. All stainless steel S-AS 65, S-DGAS 65, S-TIFAS 65 and all FX series except FX 125.	$85
	TNAS-T	2" Threaded Nipple - Tapered Thread. Threaded nipple all stainless steel standard 2” diameter nipple to fit into FIP pipe.	$55
	TNRN-P	PVC Threaded Nipple extends 2 3/8” to the S50 or TNAS nipple.	$40
	TNRN-S	Stainless Steel Threaded Nipple extends 2 3/8” to the S50 or TNAS nipple.	$200
	TNRN-4	4” Cast Iron Threaded Nipple extends 1 3/4” - 3 1/2” to the TN4A, TD Series, and High Flow Strainers.	$55
	TN4A	4” Threaded Nipple - Straight Thread. All stainless steel, 4” diameter for FX 125 series.	$200
	RB 32	3” to 2” Stainless Steel Reducer Bushing	$95

	Model	Description	List
	AKEY	Lift out key for S-AG, S-AS, S-TIF, S-TIFAS, FXAS, FXED, FXTIF, FXIG, FXSG, FFAS, FFED, FFTIF, FFIG, FFSG, FTAS, FTED, FTTIF, FTIG, FTSG Series	$5
	DKEY	Lift out key for S-DG, S-DGAS, FXDG, FXMN, FFDG, FFMN, FTDG, FTMN, and Center Drains	$5
	WKEY	Lift out key for FFST, FCSST, FCBST, and wedge wire center drains (WD 4, WD 5, RWD 5)	$5
	ST 65	Placement Brackets - Allows FF + FT 65 series products to recess 3/4” into subfloor.	$50
	ST 125	Placement Brackets - Allows FF 125 series products to recess 1” into subfloor.	$55
	ME 96 SS **ME 96 PS** **ME 96 ORB** **ME 96 SB** **ME 96 BK**	Tile Edge Profile for FF + FT installations. 3/8 x 5/8 x 96”	$75 $85 $85 $85 $85
	HS 2	2” Hair Strainer fits standard flow drains, except FF 25 series, and FT 25 series	$5
	HS 2B	2” Hair Strainer in black, fits standard flow drains, except FF 25 series, and FT 25 series	$5
	HS 4	4” Hair Strainer fits high flow drains, except S-AS 99, S-DGAS 99, and S-TIFAS 99	$10

Displays

	Price	SKU	Description	Image
NEW	$150 Net	**IDLB**	Linear Display Board - with New Site Sizable® Low Profile 30” W x 18” H 15 lbs	
	$150 Net	**IDCB**	Center Display Board 30” W x 18” H 15 lbs	
NEW	$150 Net	**IDUDB**	Universal Infinity Drain Display Board 30” W x 18” H 10 lbs	
NEW	$150 Net	**IDMF-FCS**	ID Mini Floor Sample with Schluter®-Kerdi Fabric Waterproofing 19” W x 6” H x 9” D 7 lbs	
	$150 Net	**IDMF-SS**	ID Mini Floor Sample: Stainless Steel Site Sizable with Waterproofing (S-AS 65 SS) 14” W x 6” H x 9” D 9 lbs	
NEW	$150 Net	**IDMF-SL**	ID Mini Floor Sample: PVC Site Sizable low profile with Waterproofing (S-LAG 38 SS) 14” W x 6” H x 9” D 9 lbs	
NEW	$150 Net	**IDMF-SLOT**	ID Mini Floor Sample: Slot Linear Drain (FFST SS) 14” W x 6” H x 9” D 9 lbs	
	$150 Net	**IDMAT-2**	ID Counter Mat- Updated: March 2020 26” W x 17” H x 1/8” D 1 lbs	

Displays

	Price	SKU	Description	Image
	$25 Net	**ID 10**	10” Sample Kit of S-AG 38 in Satin Stainless with PVC Clamp Down Drain 7” W x 10” L x 5” H 3 lbs	
NEW	$25 Net	**ID 10L SS** **ID 10L PS** **ID 10L ORB** **ID 10L SB** **ID 10L BK**	10” Sample Kit of S-LAG 38 (Low Profile) with PVC Clamp Down Drain Available in all five finishes. 7” W x 10” L x 5” H 3 lbs	
	$25 Net	**ID 10S**	10” Sample Kit of S-AS 65 in Satin Stainless with PVC Clamp Down Drain 7” W x 10” L x 5” H 6 lbs	
NEW	$250 Net	**IDUD**	ID Universal Drain 24” Sample Drain in Satin Stainless: with sample waterproofing attached - (Vinyl liner and Schluter Kerdi Fabric) (USQ SS) 5” W x 26” L x 4” H 4 lbs	
NEW	$5 Net	**IDFCS**	24" FCS Channel with UA 65 BK (Schluter Kerdi fabric attached) 5” W x 26” L x 4” H 4 lbs	
	$20 Net	**IDKR**	Finish Sample Chip Key Ring	
NEW	$100 Net	**IDRFK-SLP**	Site Sizable Low Profile Retro Fit Kit for previous versions of IDRB. 4 lbs	
			Desktop Business Card Holder with 4"x4" Center Drain Grate 5” W x 5” L x 1” H - 2 lbs	
	$50 Net	**IDCH-X ORB**	*Criss-Cross Pattern in Oil Rubbed Bronze*	
	$50 Net	**IDCH-Q SS**	*Square Pattern in Satin Stainless*	
	$50 Net	**IDCH-M SB**	*Moor Pattern in Satin Bronze*	
	$50 Net	**IDCH-V SS**	*Weave Pattern in Satin Stainless*	
	$50 Net	**IDCH-K PS**	*Link Pattern in Polished Stainless*	
	$50 Net	**IDCH-N BK**	*Lines Pattern in Matte Black*	
	$50 Net	**IDCH-W SS**	*Wedge Wire in Satin Stainless*	
NEW	$100 Net	**IDBL**	Stainless Steel Shower Base sample with integral linear drain 18" W x 12" L x 5" 10 lbs	

SKU Explanation

Linear Drain Kit Sku Explanation:

S AG 38 48 SS

- SS — Grate Finish
- 48 — Length of Grate (in inches)
- 38 — Width of Grate (in mm)
- AG — Series Type
- S — Type of Installation (S, FX, FF or FT)

Drain Body Kit Sku Explanation

CD I S 4 2

- 2 — Outlet diameter (in inches)
- 4 — Throat diameter of strainer (in inches)
- S — Connection type
  - No letter = No hub (Cast Iron) or Slip fit (ABS/ PVC)
  - S = Side outlet, with trap
  - Q = Side outlet, no trap
  - T = Threaded
  - C = Inside Caulk
- I — Drain Material
  - I = Cast Iron
  - P = PVC
  - A= ABS
- CD — Drain Type:
  - CD = Clamp down
  - BF = Bonded Flange

Icon Explanation

Drains that are compatible with Traditional Waterproofing

Waterproofing technique can help determine which linear drain series to specify. If using a traditional type of waterproofing, the professional will typically build a shower pan (wet waterproofed area) with PVC, Vinyl, Lead, Hot Mop, Copper or Fiberglass material. Infinity Drain's **[S]**and **[FX]** Series are recommended.

Drains that are compatible with Liquid/Fabric Waterproofing

Waterproofing technique can help determine which linear drain series to specify. If using a modern type of waterproofing such as liquid membrane or fabric sheet, the professional can more easily waterproof over a greater floor area to build a barrier free or zero threshold installation. Infinity Drain's **[FF], [FCS]** and **[FT]** Series are recommended for this type of waterproofing.

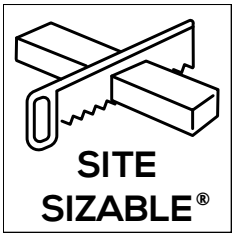

Site Sizable® Series

Infinity Drain's Site Sizable® linear drains' channels and grates length can be cut on-site for an exact wall-to-wall installation, and the drain outlet can be located anywhere along the channel run. Also Infinity Drain's Site Sizable® linear drains can be joined together to create infinite lengths for outdoor and indoor applications. We offer threaded and non-threaded outlets, 90° angle joiners, straight joiners, and custom fabrication.

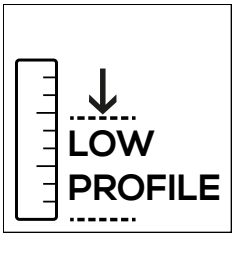

Site Sizable® Low Profile Series

Infinity Drain's Site Sizable® linear drains' channels and grates length can be cut on-site for an exact wall-to-wall installation, and the drain outlet can be located anywhere along the channel run. The new lower profile series reduces the PVC channel height from 1-5/8" to 1" and allows for easier installation of barrier free showers.

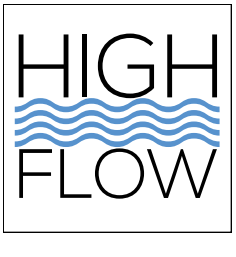

High Flow Drains

High flow drains are designed to connect to a 3" waste line. These drains are rated at 21 GPM and are ideal for showers that have multiple shower heads or body sprays.

Installation

Site Sizable PVC

Installation

For an exact wall-to-wall installation. The channel and grate length can be cut on-site, and the drain outlet can be located anywhere along the channel run. Available in kit lengths or sold as individual components.

Waterproofing via clamping floor drain:

- Copper Pan
- Hot Mop
- PVC Liner
- Fiberglass
- Lead Pan
- Rubber Liner (Chloraloy®)

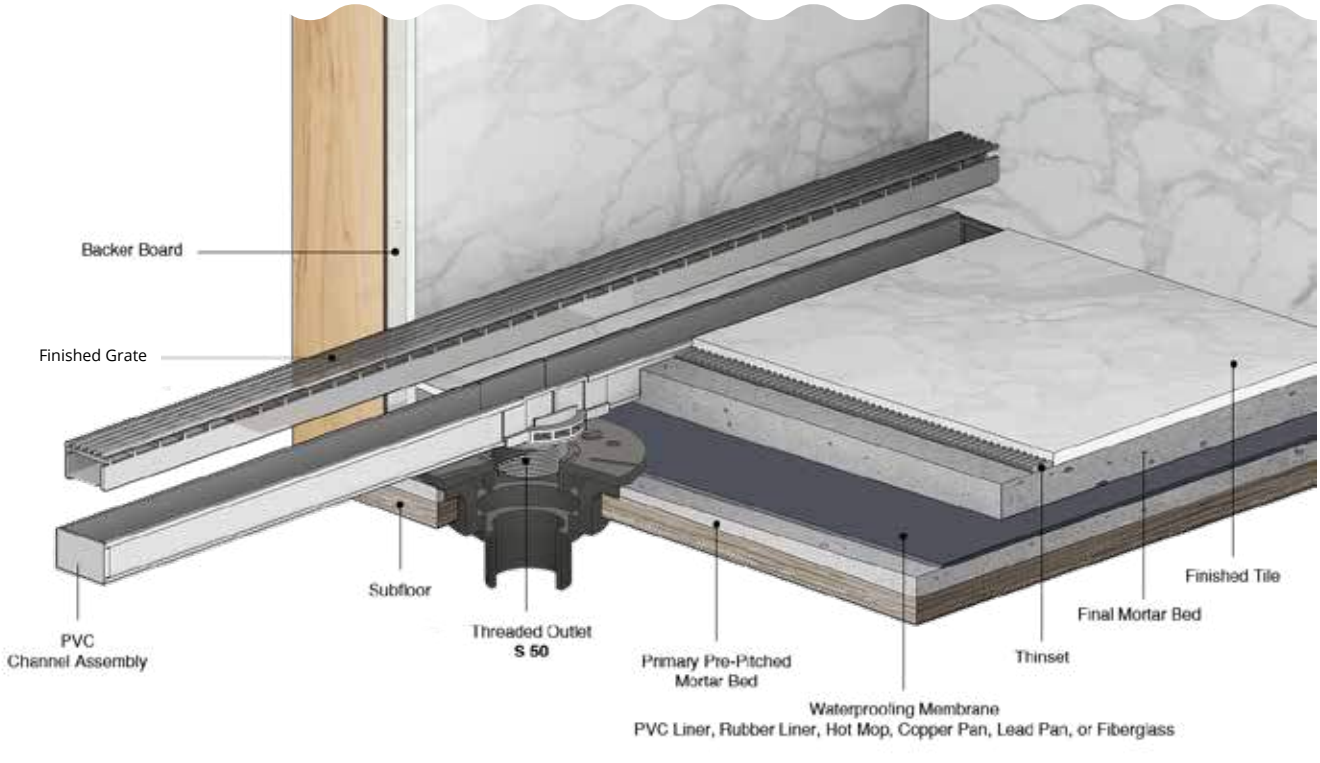

Installation
Site Sizable PVC

Complete Kits Include

Grate, PVC Channel, PVC Stop Ends, PVC Outlet Section(s), PVC Threaded Outlet(s), Channel Trim, Hair Strainer(s), and Lift-Out Key.

- Requires 2" clamping floor drain with 2" throat
Not included in complete kit.

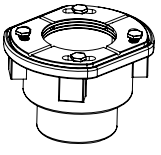

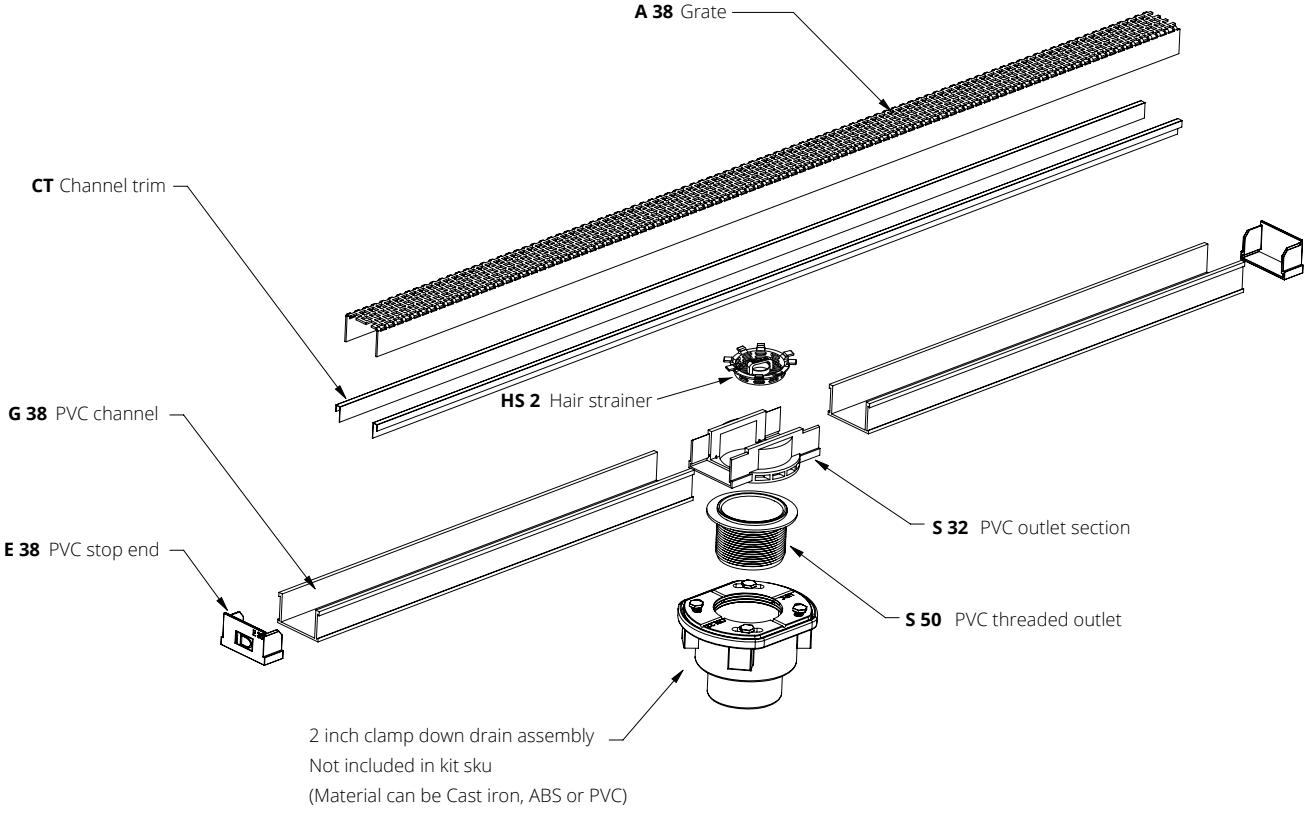

INSTALLATION VIDEOS ONLINE

youtube.com/IDInfinityDrain

SCAN TO WATCH

Installation

Site Sizable Stainless Steel

Installation

For an exact wall-to-wall installation. The channel and grate length can be cut on-site, and the drain outlet can be located anywhere along the channel run. Available in kit lengths or sold as individual components.

Waterproofing via clamping floor drain:

- Copper Pan
- Hot Mop
- PVC Liner
- Fiberglass
- Lead Pan
- Rubber Liner (Chloraloy®)

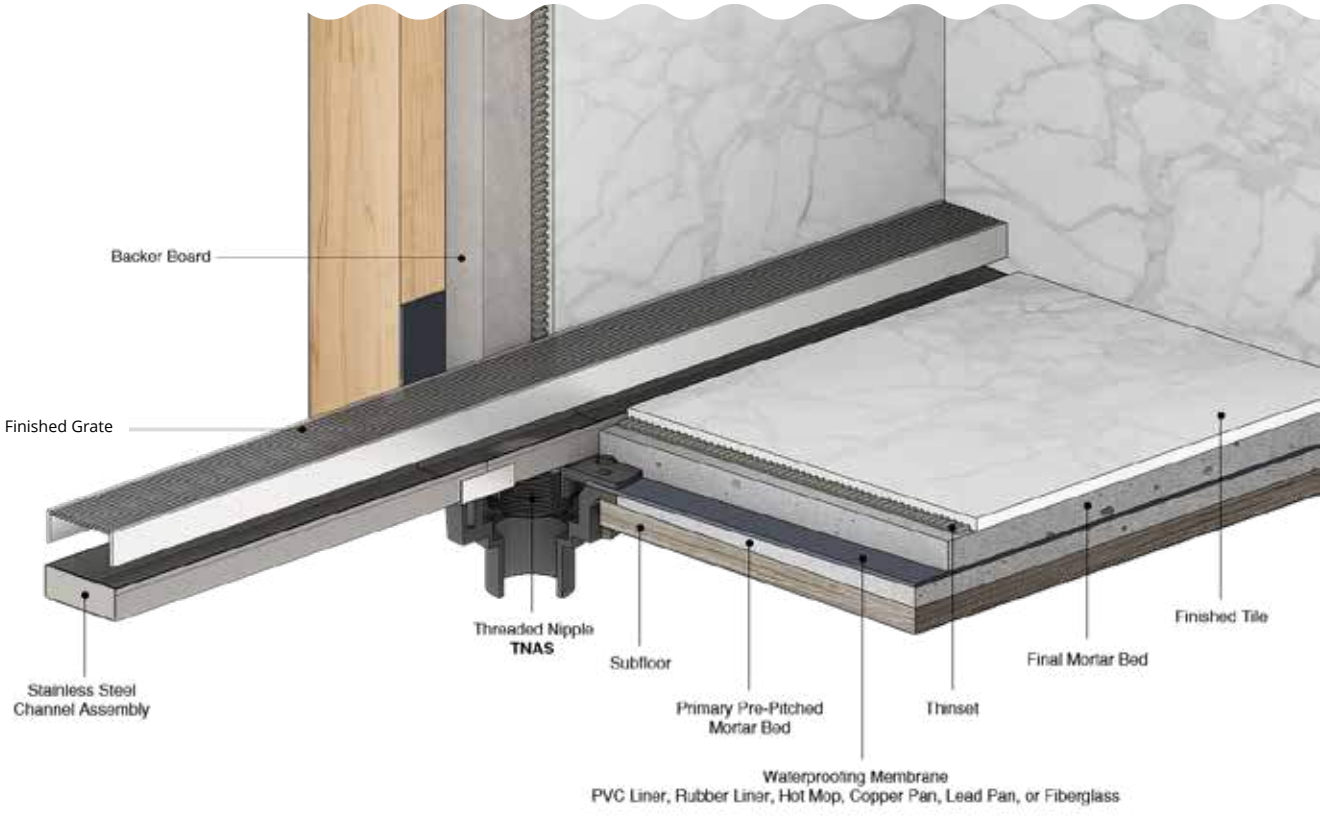

Installation

Site Sizable Stainless Steel

Complete Kits Include

Grate, Stainless Steel Channel, Stainless Steel Outlet Section(s), Hair Strainer(s), Stainless Steel Joiner Strips, Threaded Nipple(s), Channel Trim, Construction Sealant, and Lift-Out Key.

- Requires 2" clamping floor drain with 2" throat
Not included in complete kit.

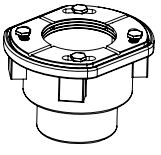

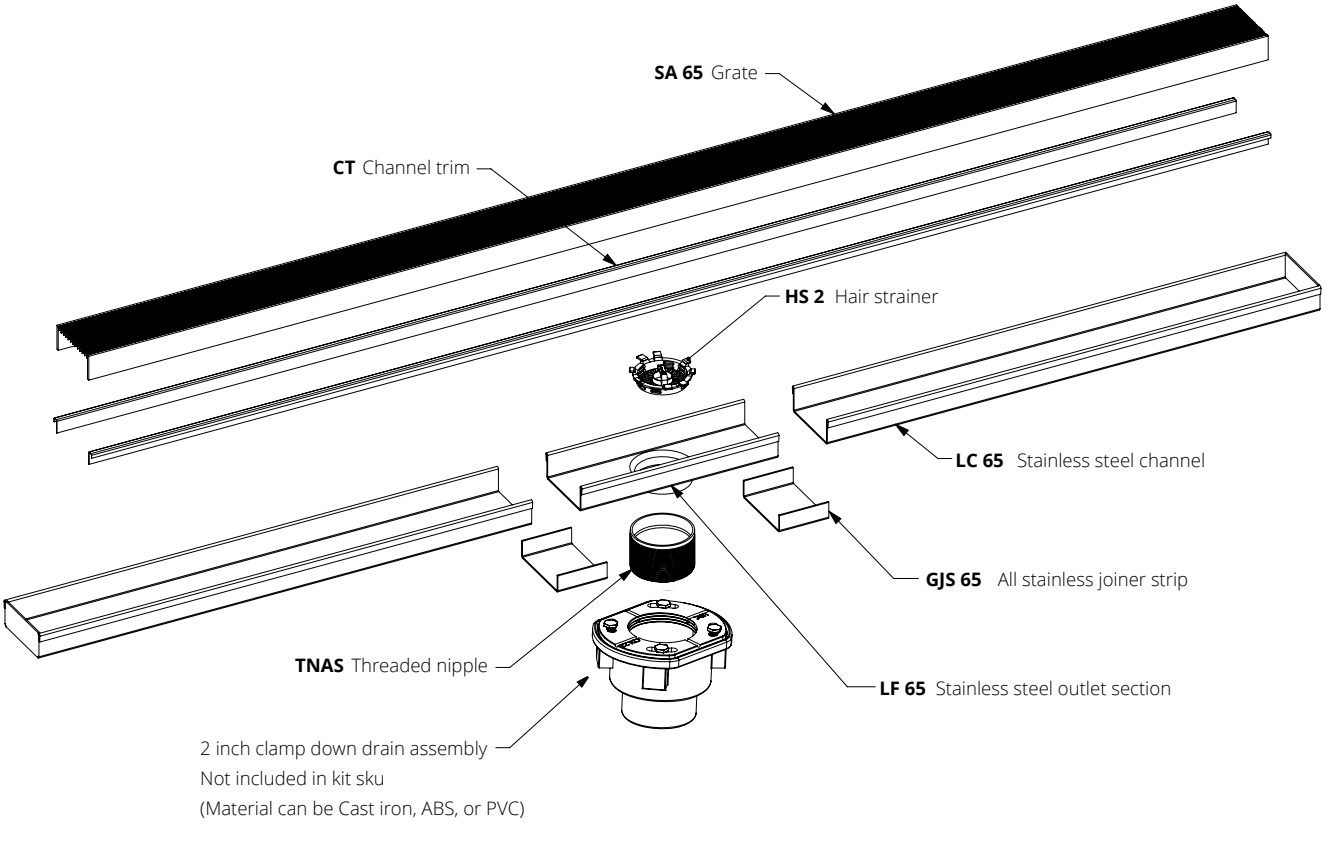

INSTALLATION VIDEOS ONLINE

youtube.com/IDInfinityDrain

SCAN TO WATCH

Installation
Fixed Length

Installation

A pitched channel with a set outlet location. Standard kit sizes or custom fabrication are available.

Waterproofing via clamping floor drain:

- Copper Pan
- Hot Mop
- PVC Liner
- Fiberglass
- Lead Pan
- Rubber Liner (Chloraloy®)

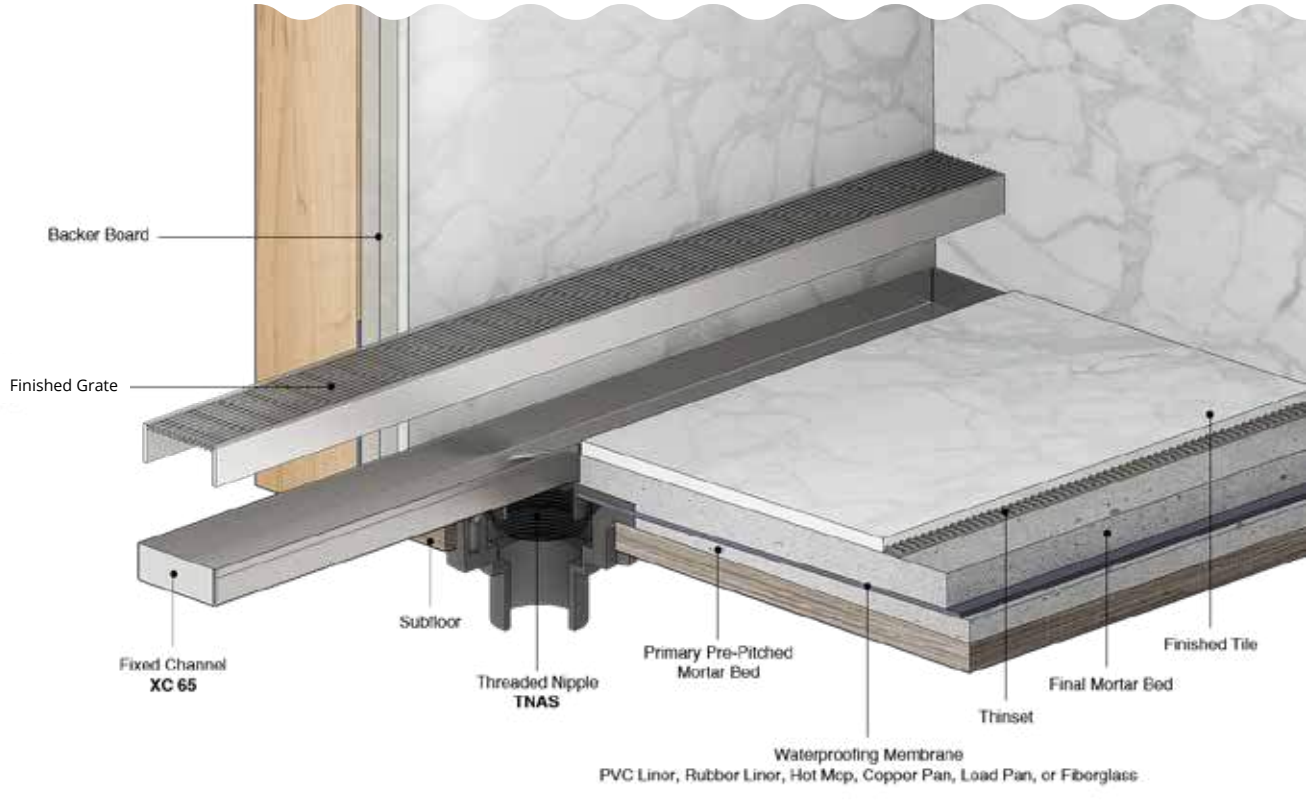

Installation
Fixed Length

Complete Kits Include

Grate, Fixed Channel, Threaded Nipple, Hair Strainer, and Lift-Out Key.

- Requires 2" clamping floor drain with 2" throat
Not included in complete kit.

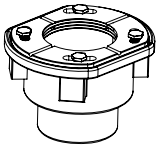

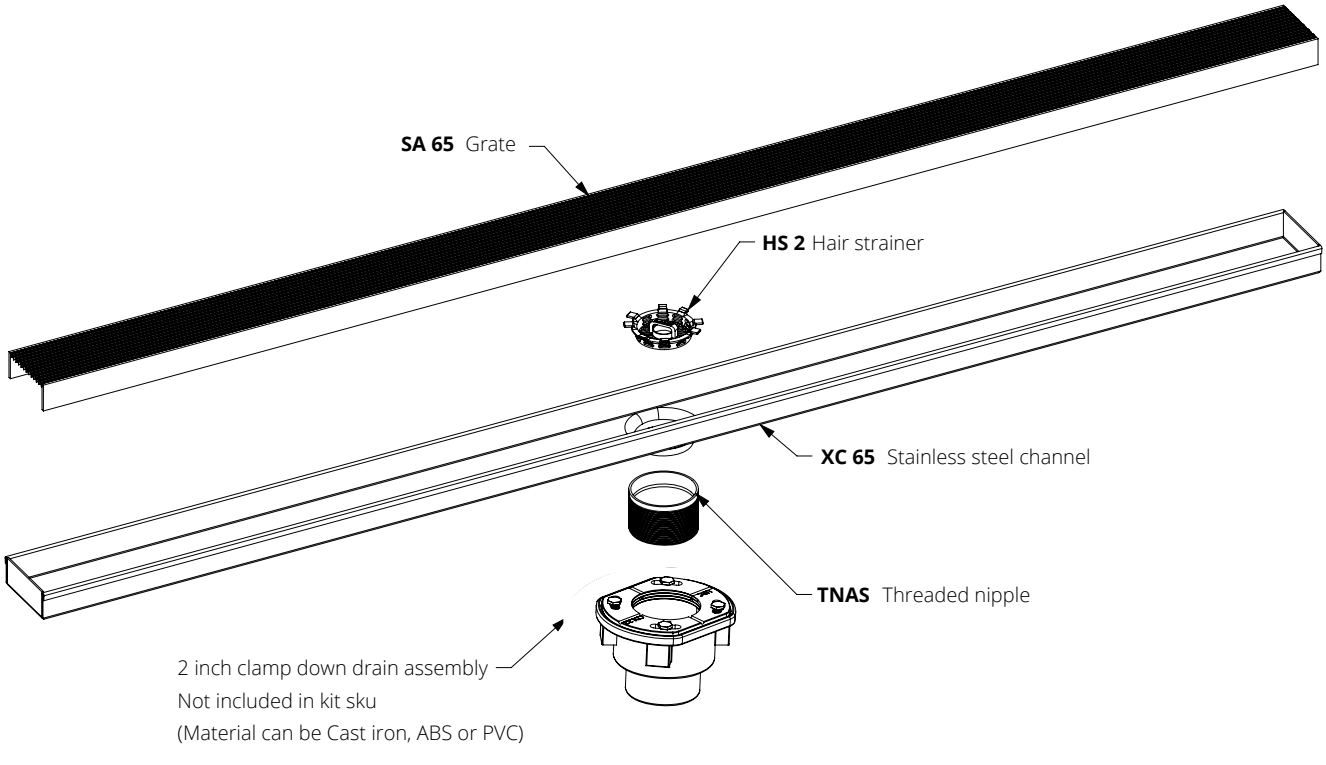

INSTALLATION VIDEOS ONLINE

youtube.com/IDInfinityDrain

SCAN TO WATCH

Installation

Fixed Flange

Installation

A pitched flanged channel with a set outlet location. Standard kits sizes or custom fabrication are available. Install with a liquid membrane or fabric sheet waterproofing methods (Bonded Flange). Outlet is vertical (down).

Waterproofing:

° Liquid Membrane
° Fabric Sheet

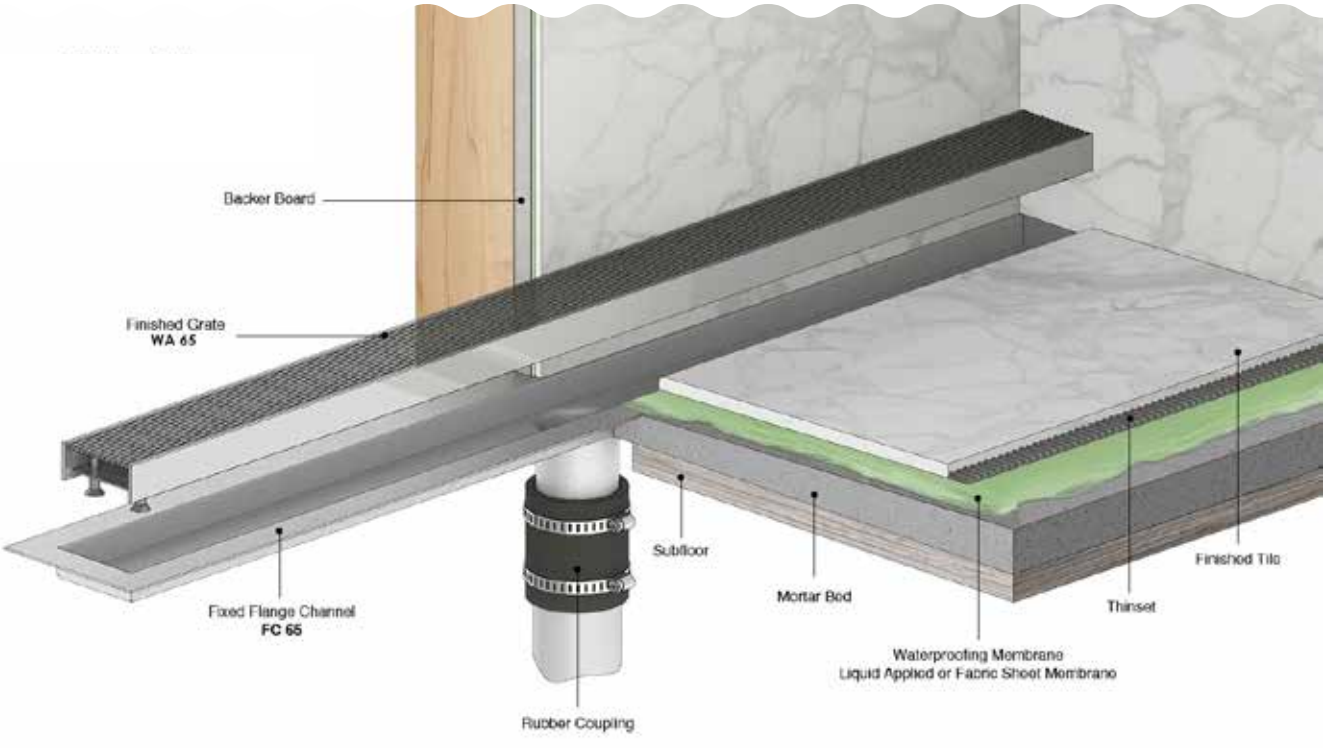

Installation
Fixed Flange

Complete Kits Include

Grate, Fixed Flange Channel, Hair Strainer, and Lift-Out Key.

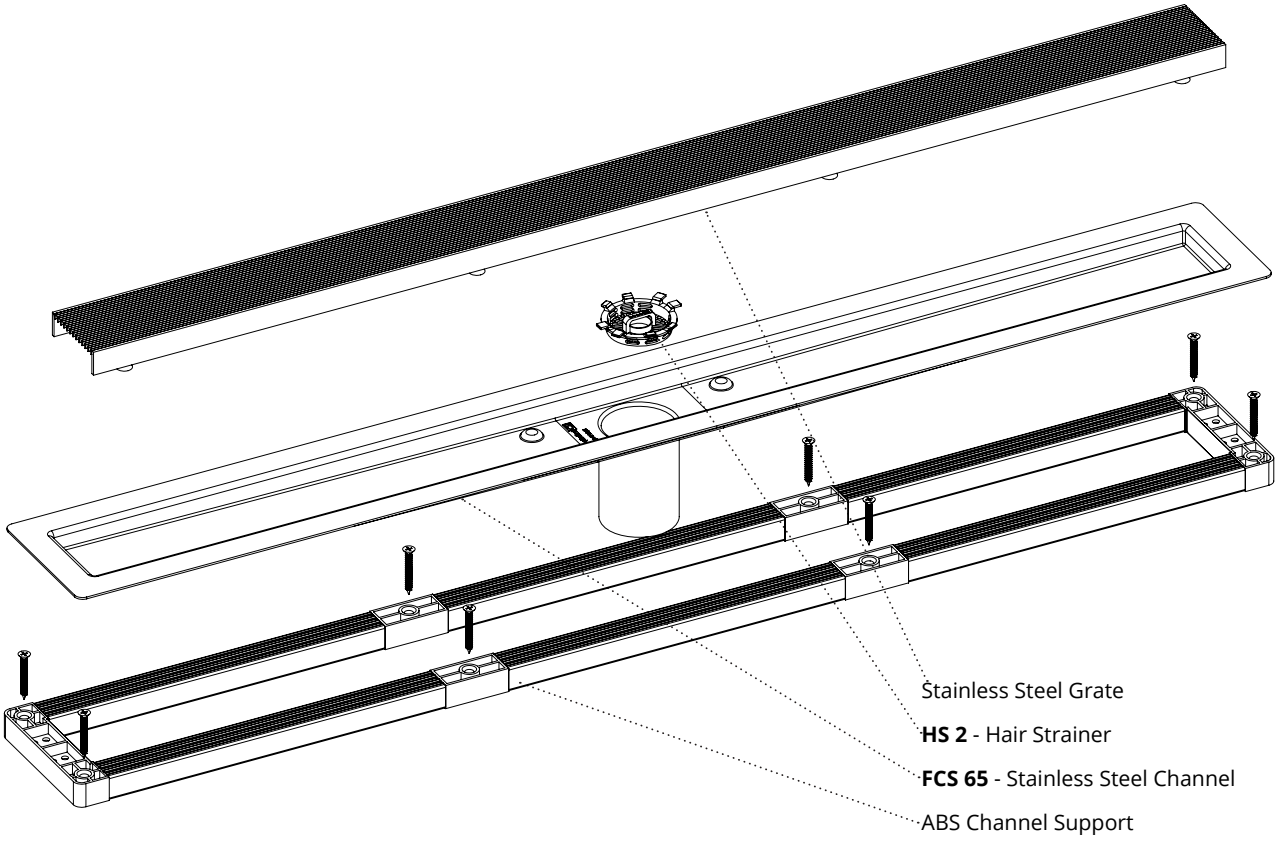

INSTALLATION VIDEOS ONLINE

youtube.com/IDInfinityDrain

SCAN TO WATCH

Installation

FCS - Fixed Flange with Schluter® Kerdi Waterproofing

Installation

A pitched flanged channel with a set outlet location. Standard kits sizes or custom fabrication are available. Install with a liquid membrane or fabric sheet waterproofing methods (Bonded Flange). Outlet is vertical (down).

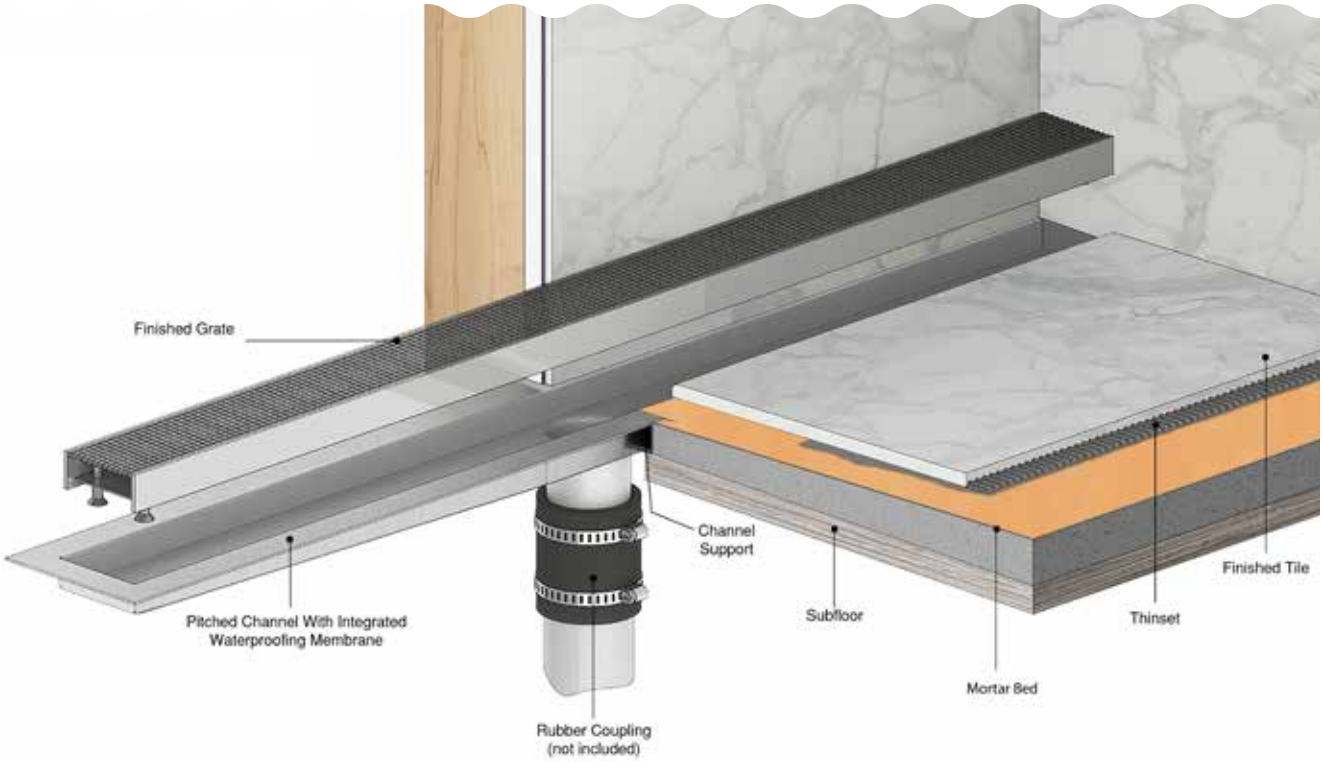

Installation

FCS - Fixed Flange with Schluter® Kerdi Waterproofing

Complete Kits Include

Grate, Fixed Flange Channel, Hair Strainer, and Lift-Out Key.

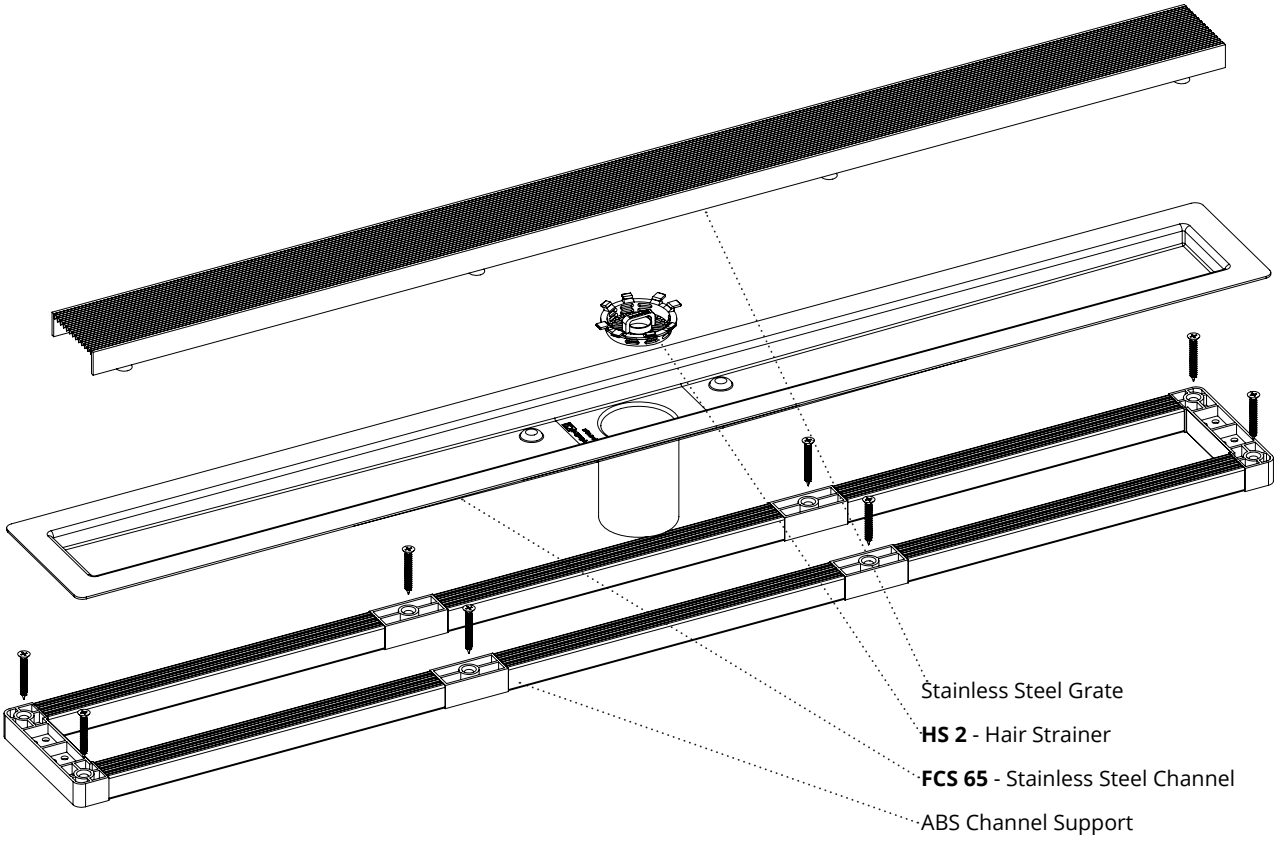

INSTALLATION VIDEOS ONLINE

youtube.com/IDInfinityDrain

SCAN TO WATCH

Installation

Side Outlet

Installation

A pitched flanged channel with a set outlet location. Standard kits sizes or custom fabrication are available. Install with a liquid membrane or fabric sheet waterproofing methods (Bonded Flange). Outlet is vertical (down).

Waterproofing:

° Liquid Membrane
° Fabric Sheet

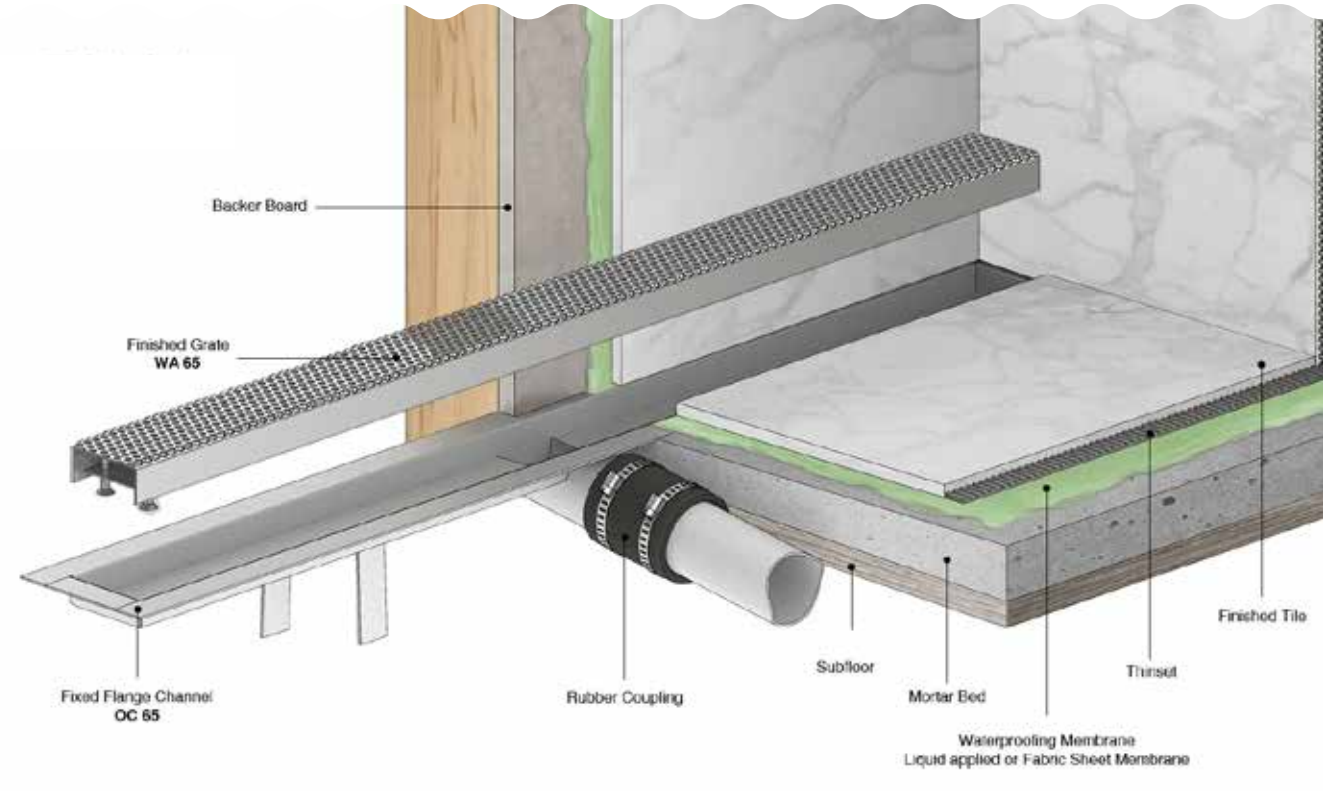

Installation
Side Outlet

Complete Kits Include

Grate, Fixed Flange Channel, Hair Strainer, and Lift-Out Key.

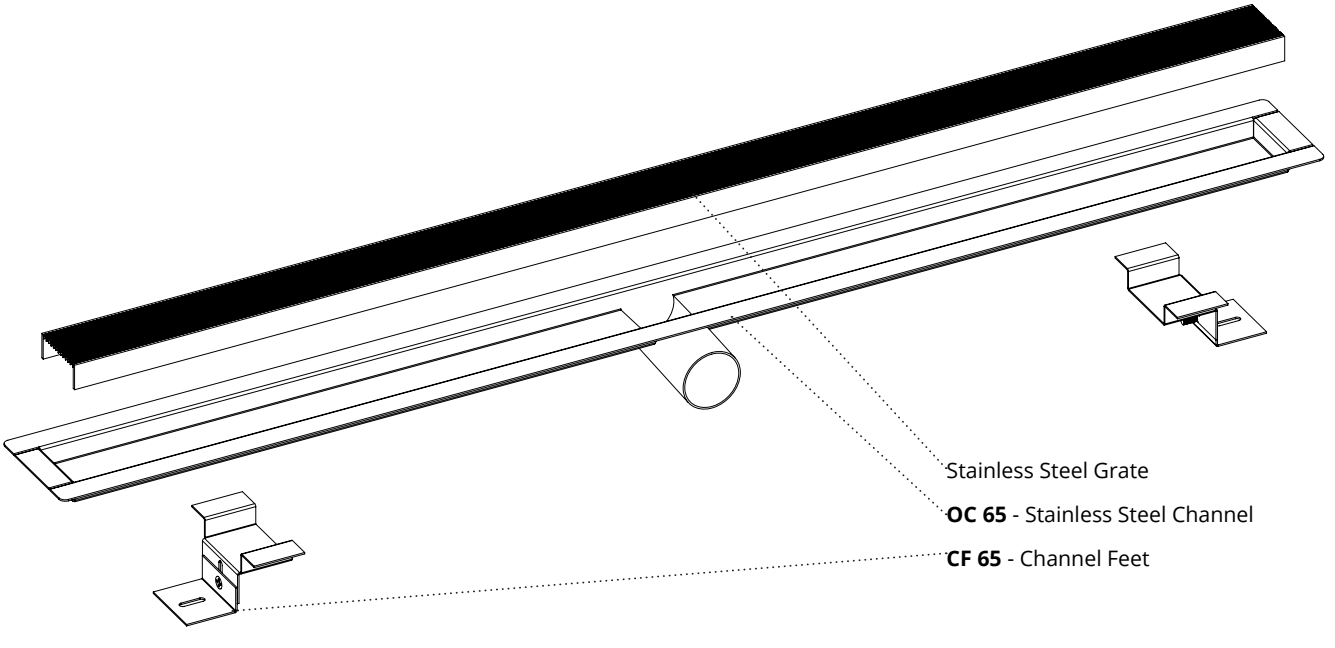

INSTALLATION VIDEOS ONLINE

youtube.com/IDInfinityDrain

SCAN TO WATCH

Installation

FCB Double Waterproofing

Installation

A pitched flanged channel with a set outlet location. Standard kits sizes or custom fabrication are available. Install with a liquid membrane and fabric sheet waterproofing methods (Bonded Flange). Outlet is vertical (down).

Waterproofing via clamping floor drain:

- Copper Pan
- Hot Mop
- PVC Liner
- Fiberglass
- Lead Pan
- Rubber Liner (Chloraloy®)

&

- Liquid Membrane
- Fabric Sheet

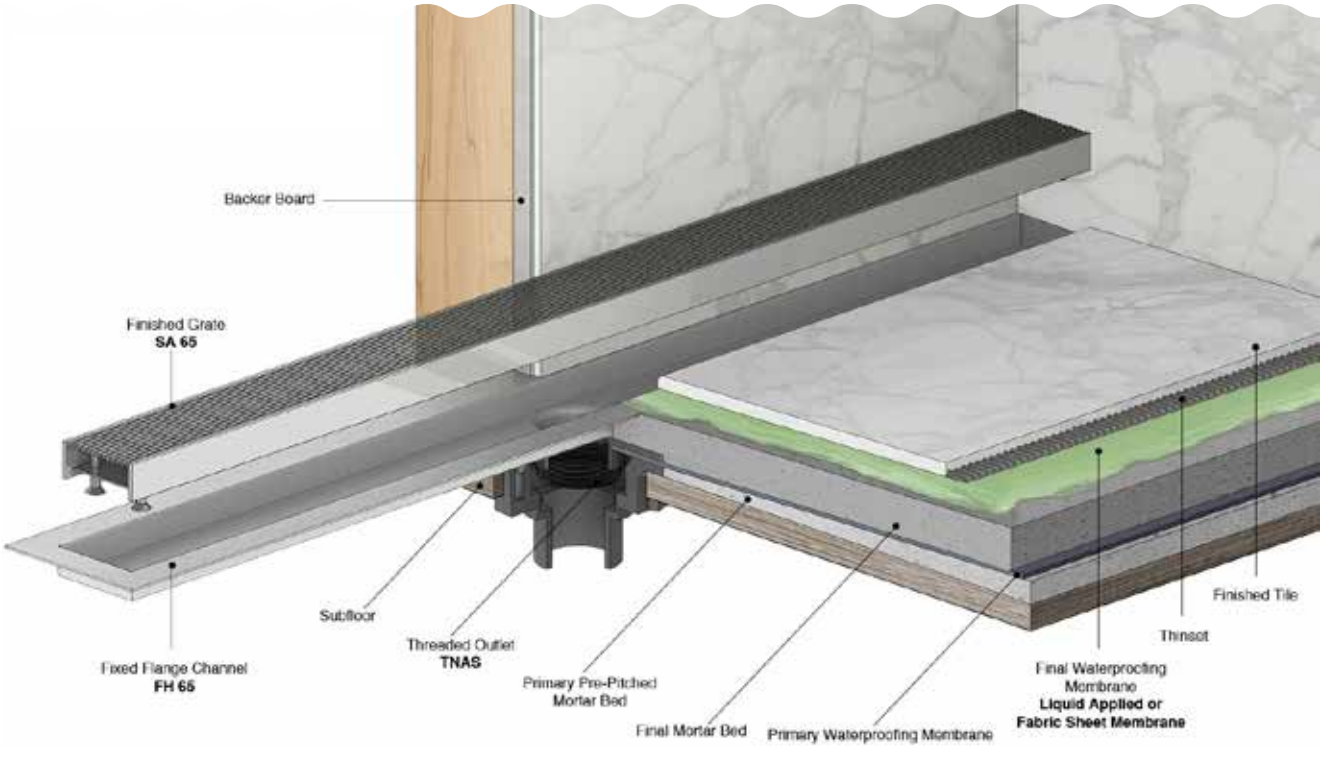

Installation

FCB Double Waterproofing

Complete Kits Include

Grate, FCB Channel,Threaded Nipple, Hair Strainer, and Lift-Out Key.

- Requires 2" clamping floor drain with 2" throat
Not included in complete kit.

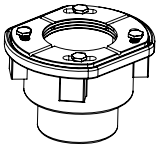

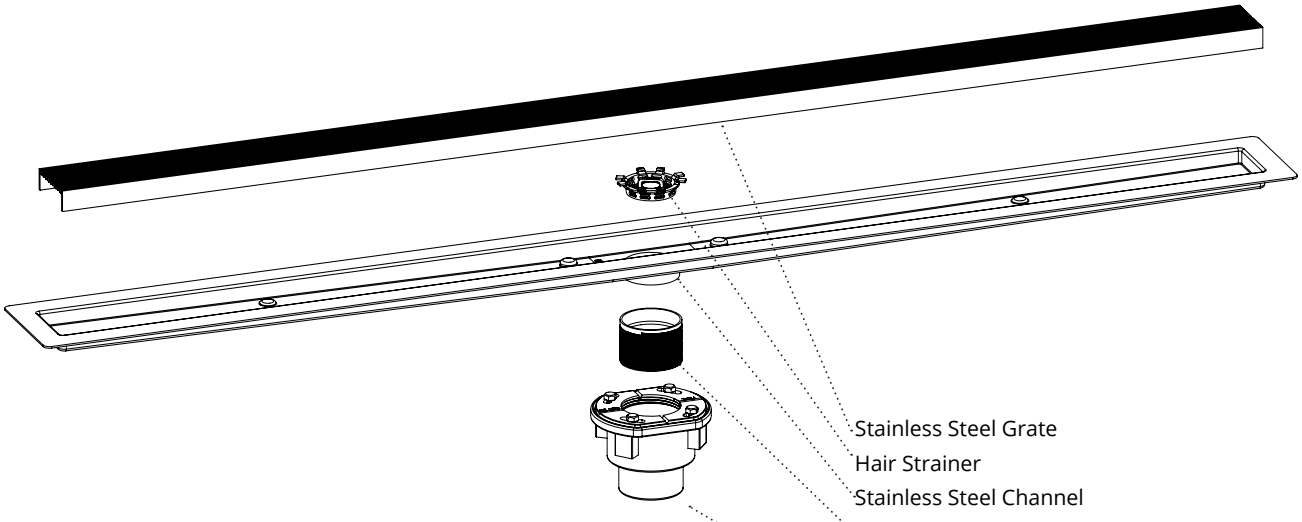

Stainless Steel Grate
Hair Strainer
Stainless Steel Channel
Threaded Nipple

2" Clamp Down Drain Assembly
Not included in complete kits

(Material can be Cast Iron, ABS, or PVC)

INSTALLATION VIDEOS ONLINE

youtube.com/IDInfinityDrain

SCAN TO WATCH

Installation
Universal Drain

Installation

A pitched channel with a set outlet location. Standard kit sizes are available only. Install with a liquid membrane or fabric sheet waterproofing methods Outlet is vertical (down)

Compatible with traditional waterproofing:

° Hot Mop ° PVC Liner ° Rubber Liner

OR

° Liquid Applied ° Fabric Wateproofing

Installation
Universal Drain

Complete Kits Include

Grate, Fixed Channel, Clamping Collar, Hair Strainer, and Lift-Out Key.

Solvent weld connection with flanged channel for bonding waterproofing or clamping frame for traditional waterproofing.

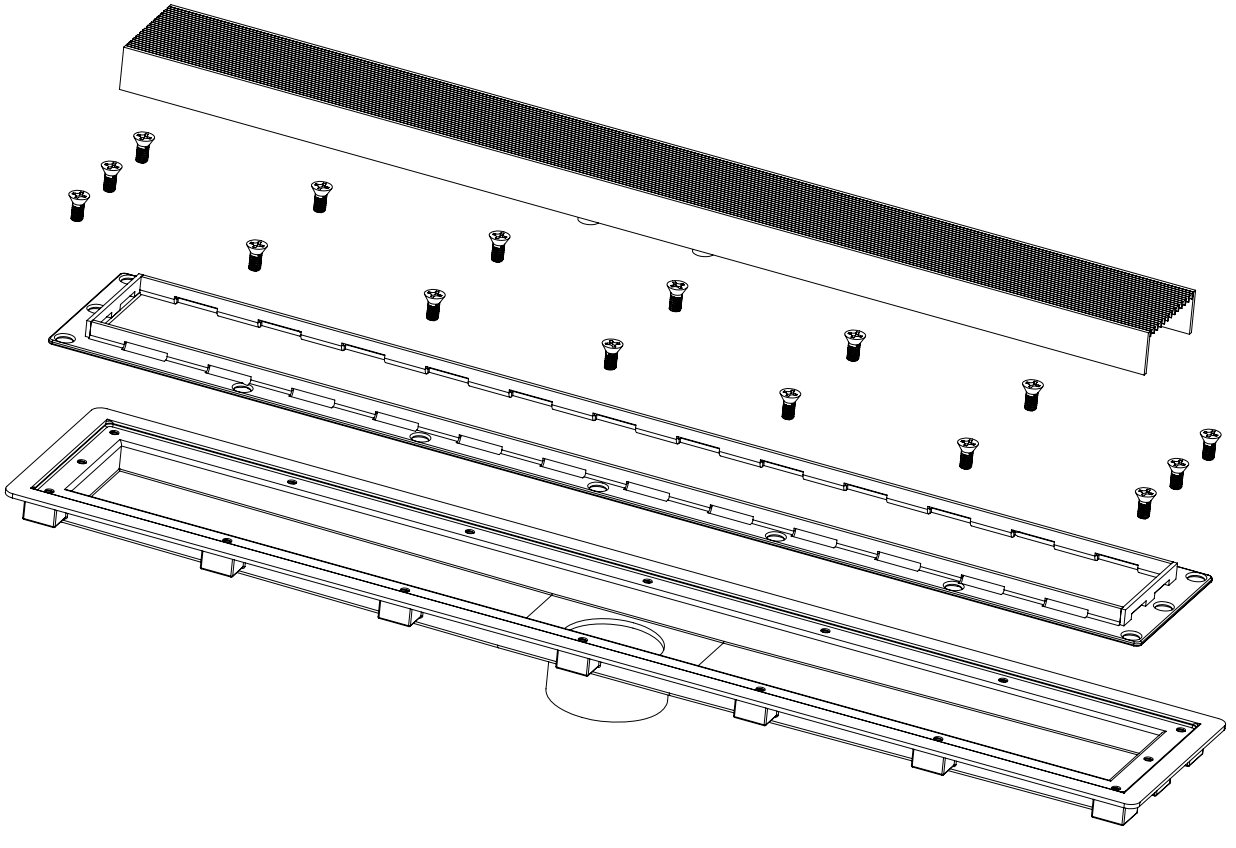

INSTALLATION VIDEOS ONLINE

youtube.com/IDInfinityDrain

SCAN TO WATCH

Installation

Stainless Steel Shower Base

Installation

A one piece stainless steel shower base with integral drain in standard sizes or custom fabrication is available. Shower floor sets shower framing for exact wall to wall installation.

Stainless steel shower base is completely waterproof. Additional waterproofing on wall is optional.

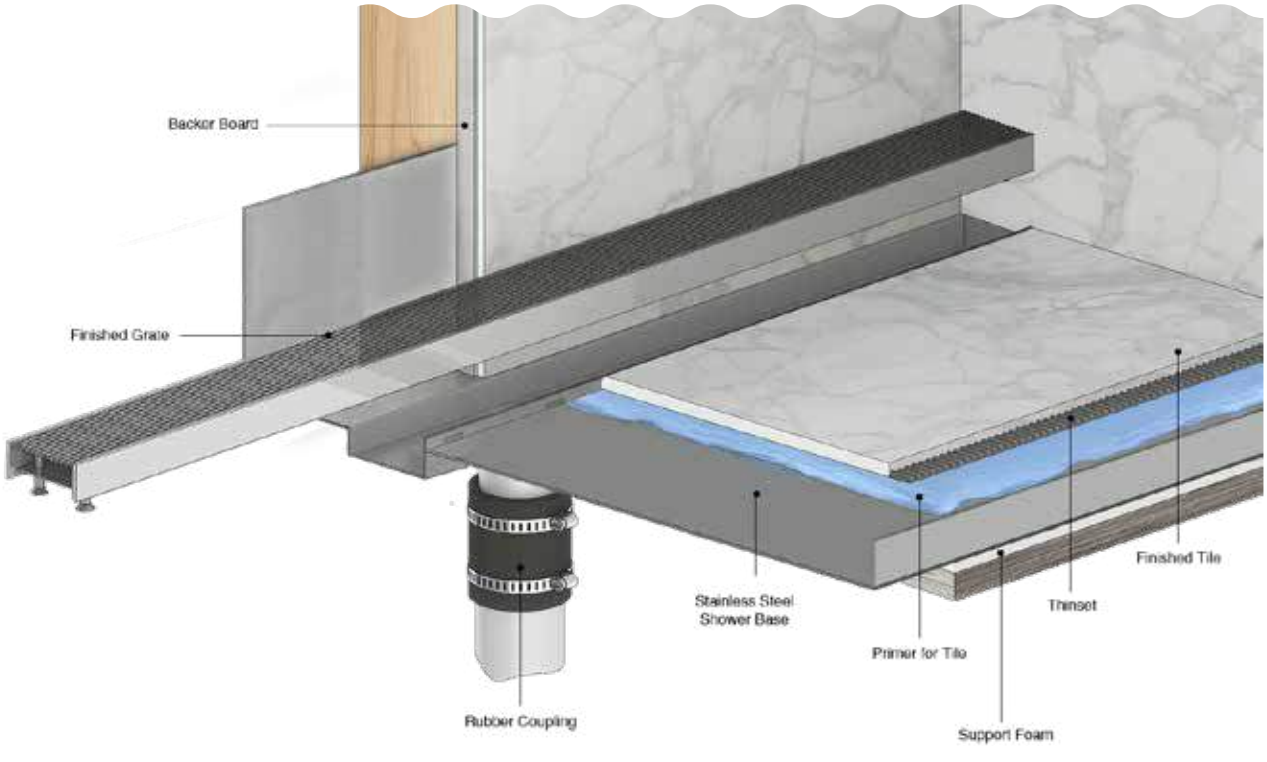

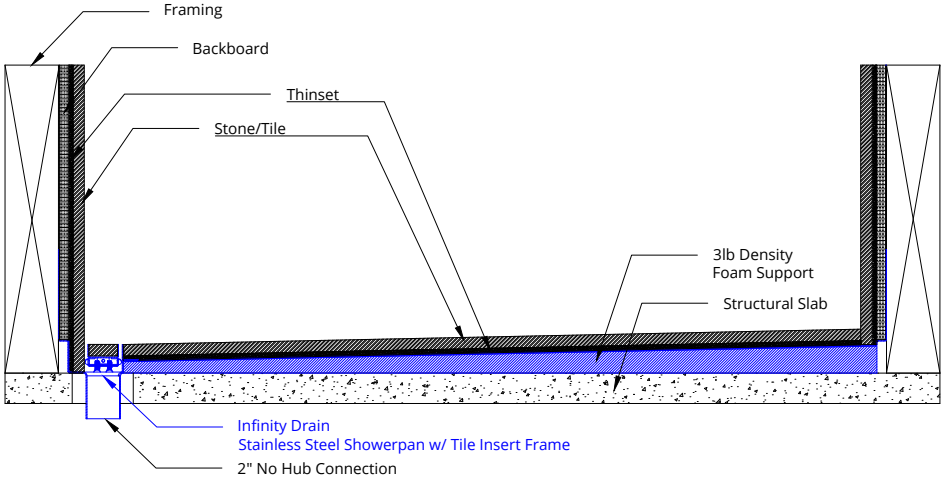

Installation

Stainless Steel Shower Base

Lifetime Guarantee
Covers labor, removal, replacement and restoration.

LIFETIME GUARANTEE

See page 182-184 for warranty details.

With a 6" sleeve on foundation, the 2" no hub connection through slab allows for 2" variance in any direction. Factory flood tested as per UPC and IPC standards.

Plumbing code compliant for use as prefabricated shower receptor. IAPMO tested to IAPMO PS-106-2015 standard.

INSTALLATION VIDEOS ONLINE

youtube.com/IDInfinityDrain

SCAN TO WATCH

Installation
Stainless Steel Shower Base

Installation

A one piece stainless steel shower base with integral drain in standard sizes or custom fabrication is available. Shower floor sets shower framing for exact wall to wall installation.

Stainless steel shower base is completely waterproof. Additional waterproofing on wall is optional.

Installation

Stainless Steel Shower Base

Lifetime Guarantee
Covers labor, removal, replacement and restoration.

LIFETIME GUARANTEE

See page 182-184 for warranty details.

With a 6" sleeve on foundation, the 2" no hub connection through slab allows for 2" variance in any direction. Factory flood tested as per UPC and IPC standards.

Plumbing code compliant for use as prefabricated shower receptor. IAPMO tested to IAPMO PS-106-2015 standard.

INSTALLATION VIDEOS ONLINE

YouTube

youtube.com/IDInfinityDrain

SCAN TO WATCH

Installation

Center Drain - Traditional Waterproofing

Traditional Installation

A center drain where the floor is pitched in four directions toward the drain using a traditional form of waterproofing.

Waterproofing via clamping floor drain:

- Copper Pan
- Hot Mop
- PVC Liner
- Fiberglass
- Lead Pan
- Rubber Liner (Chloraloy®)

Complete Kits Include

Strainer, Throat, Hair Strainer, Clamping Floor Drain (Cast Iron, ABS or PVC) and a Lift-Out Key.

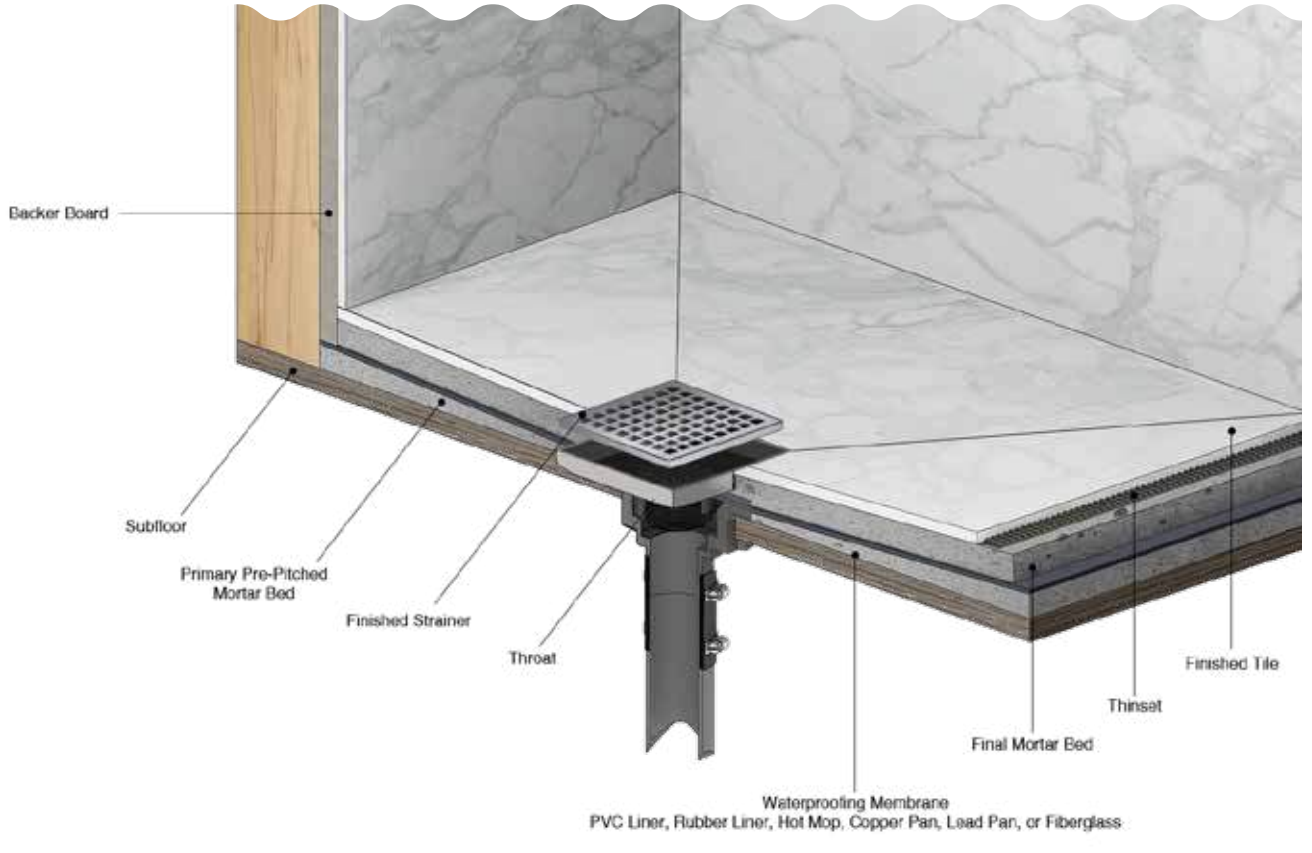

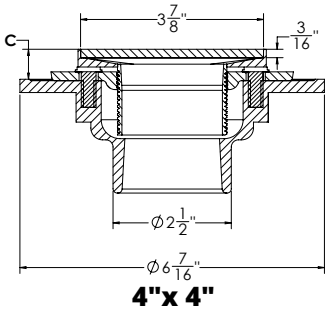

4"x 4"

Center Drain

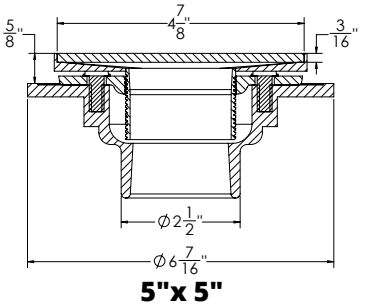

5"x 5"

Center Drain

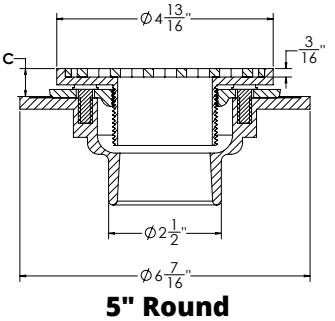

5" Round

Center Drain

Installation

Center Drain - Bonded Waterproofing

Bonded Installation

A center drain where the floor is pitched in four directions toward the drain using a bonded waterproofing.

Waterproofing:

° Liquid Membrane
° Fabric Sheet Membrane

Complete Kits Include

Strainer, Throat, Hair Strainer, ABS or PVC Bonded Flange Drain Body, and a Lift-Out Key.

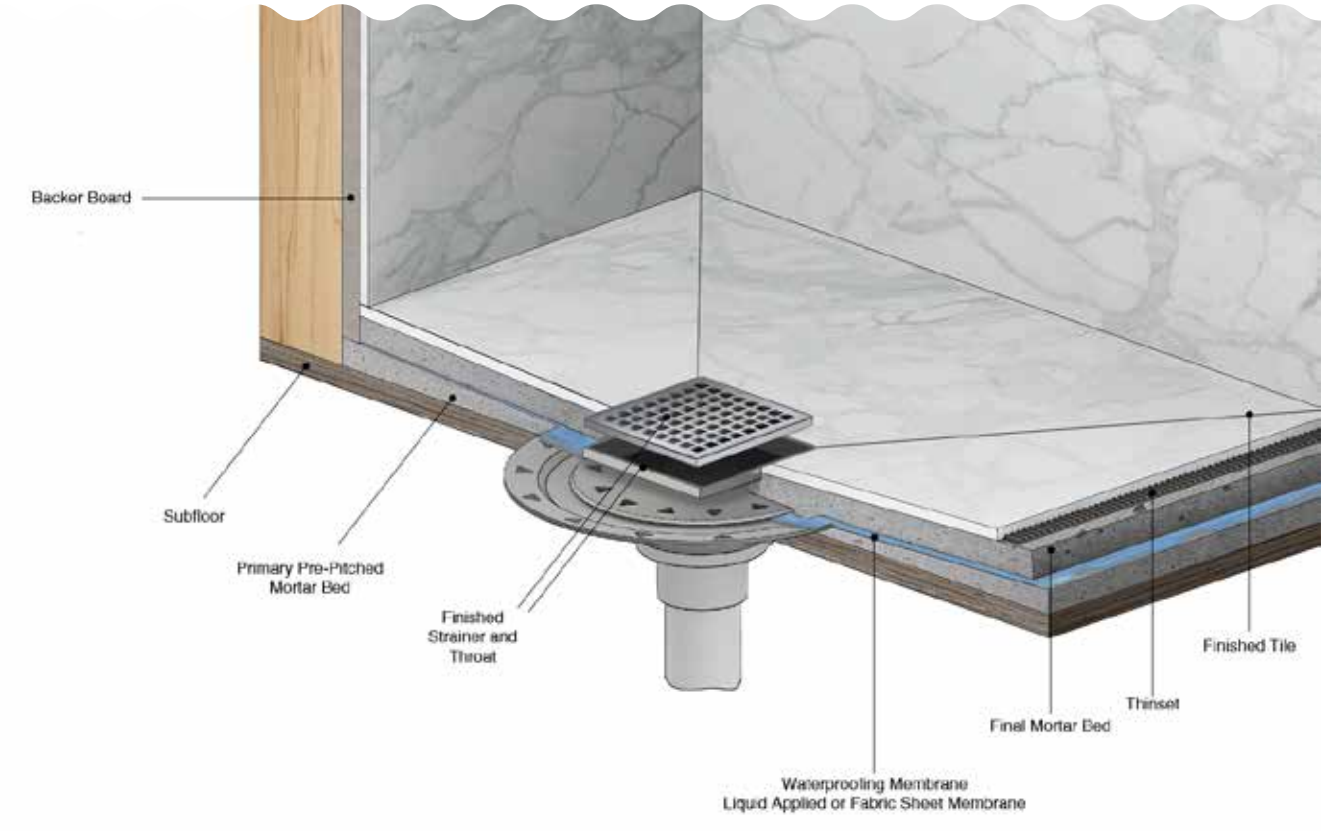

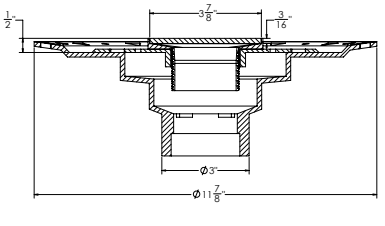

4"x 4"
Center Drain

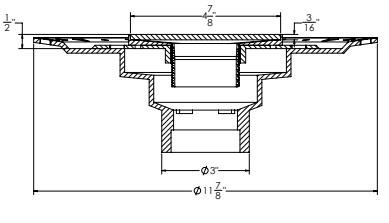

5"x 5"
Center Drain

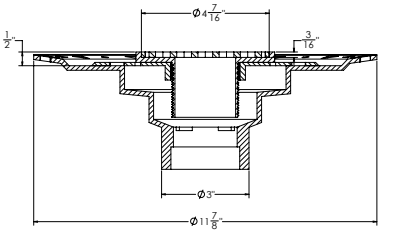

5" Round
Center Drain

Linear Drain Guide

General Installation Guidelines

Whether it is a barrier threshold (curb), or barrier free (curbless/zero threshold) installation, Infinity Drain™ has provided general guidelines below to assist in determining the correct product choice for your project.

FLOOR PITCH DIRECTION

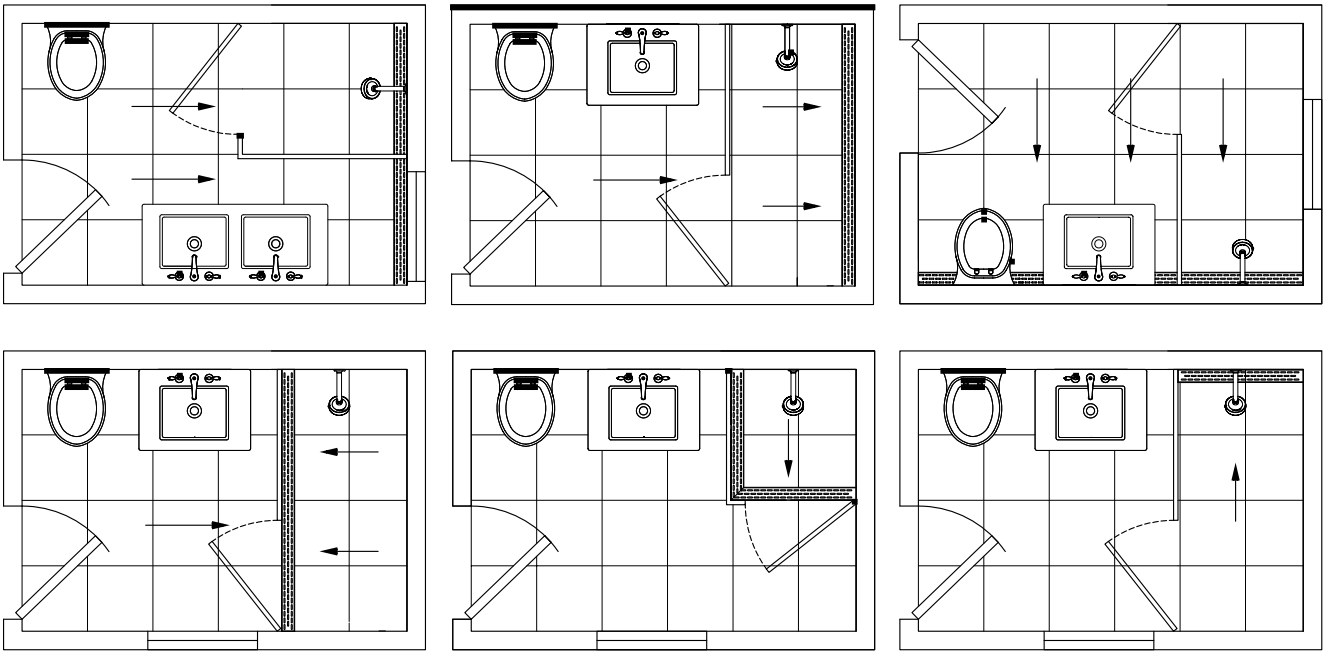

Site Conditions

Whether it is a renovation or new construction, choosing where to locate a linear drain is contingent on the waste line location, which may be predetermined or already installed. Moving a waste line may be possible, depending on site conditions. Infinity Drain's™ Site Sizable™ **[S]** Series provides flexibility during the installation process by allowing the outlet to be placed anywhere along the channel run. Always consult with a licensed professional.

Locating Linear Drains

A linear drain allows for the use of larger format floor tile and the ability to pitch the floor in one direction. This offers an advantage from the traditional center drain installation, where the floor must slope in four directions in order to properly drain the water.

Linear Drain Guide
General Installation Guidelines

Fig 1: Wall-to-Wall

Fig 2: NOT Wall-to-Wall

Fig 3: Against a Wall

Fig 4: Threshold Install

Fig 5: Threshold Install

Type of Install

Wall-to-Wall (Fig 1, Fig 2)

One way to ensure proper drainage is to install the linear drain from wall-to-wall. The challenge of this installation is that it requires an exact dimension. Infinity Drain offers a solution to this issue with the Site Sizable™ **[S]** Series, which allows for "site sizing" the length of the drain by cutting the grate and channel to the exact finished wall-to-wall dimension. Infinity Drain's **[FX]** **[FF]** **[FT]** & **[FCS]** Series can be custom fabricated for the exact desired length and outlet location.

Against a Wall (Fig 3)

Infinity Drain's Fixed Flange (**[FF] & [FCS]**, bottom outlet and Side Outlet **[FT]**, horizontal or side outlet) Series are designed for flush against the wall installations. These series are intended for use with liquid or fabric sheet waterproofing to tie into the wall board. They are available with a center outlet location and in set lengths of 24", 32", 36", 42", 48", and 60." Custom sizes and outlet locations are available.

The **[S]** Site Sizable and Fixed **[FX]** Series require a traditional clamping floor drain body for PVC/Vinyl Liner, Rubber Liner, Lead Pan, Copper Pan, Fiberglass, and Hot Mop type waterproofing. The diameter of the clamping floor drain body creates a challenge for flush against the wall installations. If using these series Infinity Drain recommends three options to help properly achieve against the wall installations:

1. Build out the back wall with a double layer of wall board.

2. Use the **[FF]** , **[FCS]**or **[FT]** Series for exact against the wall installation.

Curb or Curbless (Fig 3, 4, and 5)

Deciding between a barrier threshold (curb) or barrier free (curbless) installation is critical when a linear drain is being considered. Please consult a licensed professional when determining which installation is possible. Please see Barrier Free on pages 171-175 for more information.

Threshold Installation (Fig 4 and 5)

For threshold installs, we recommend the drain run exactly wall-to-wall to block any water from leaving the shower or wet area. We do not recommend linear drains less than 2" wide or Tile Insert Frame drains for threshold installations without a curb due to the lack of channel width needed to sufficiently catch the water.

Barrier Free Installation (Fig 4 and 5)

Installing a shower drain without a curb, barrier, or threshold creates a seamless look with easy accessibility to the wet area. To achieve an ideal installation, floor heights should be equal between the shower area (wet area), outside the shower (dry area), and next room. Details on pages 171-175.

Linear Drain Guide

General Installation Guidelines

Flow Rates

There are many variables that influence flow rates and how drains perform. Our listed GPM (gallons per minute) on Infinity Drain™ products are based on having a "head of water" that is traveling at ½" high. Different head heights will change flow rate. Without calculating a specific install, use our flow rate as a general guideline. The following variables should be considered when choosing and locating a linear drain.

VARIABLES TO CONSIDER:

- What is flow rate of the shower valve? (i.e. how much water is being drained?)
- Are there multiple shower valves?
- What is the water pressure or PSI of the site location?
- How many water features? (i.e. shower heads, hand shower, body sprays, etc.?)
- Will the fixtures operate at the local plumbing code's legal gallons per minute?
- Will the flow restrictors be removed from the fixtures?

The answers to the above questions fall into the equation of determining the proper type of drain, outlets necessary, and location of the drain. These variables can vary drastically from installation to installation, and because of this, it is difficult to have an absolute flow rate. Most US residential installations use a 2" waste line, which has an average capacity of 9 GPM at ½" head of water, assuming proper venting. Adding additional 2" outlets and tying them to a 3" waste line will significantly increase the flow rate to 21 GPM. Infinity Drain's 3" outlet products have an average capacity of 21 GPM.

Outlets

Infinity Drain products are intended for both indoor and outdoor use. For indoor installations, we recommend an outlet every 30". For example, on a 60" length drain, if the outlet is centered, it is considered to have 30" on either side. In the same example, if the outlet is offset 5" to one side, we would recommend a secondary outlet, especially for a zero-threshold installation. Our 72", 80", and 96" complete kits come standard with two outlet assemblies. The Site Sizable **[S]** Series can add additional outlet components to the kit. Custom fabrication with multiple outlets is available on the **[FX]**, **[FF]**, **[FCS]**, **[FCB]** and **[FT]** linear drain Series. Outdoor installations: Outlet frequency is dependent on drain application and geographic location. Please contact us with questions regarding your specific installation.

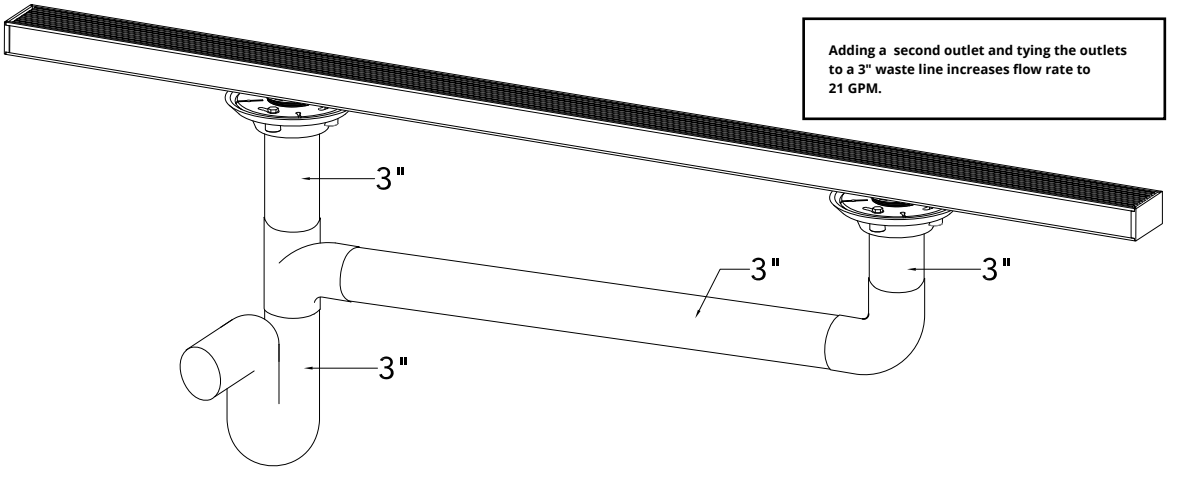

Adding a second outlet and tying the outlets to a 3" waste line increases flow rate to 21 GPM.

Waterproofing

Waterproofing technique can help determine which linear drain series to specify. If using a traditional type of waterproofing, the professional will typically build a shower pan (wet waterproofed area) with PVC, Vinyl, Lead, Hot Mop, Copper or Fiberglass material. Infinity Drain's **[S]**and **[FX]** Series are recommended. If using a modern type of waterproofing such as liquid membrane or fabric sheet, the professional can more easily waterproof over a greater floor area to build a barrier free or zero threshold installation. Infinity Drain's **[FF]**, **[FCS]**, and **[FT]** Series are recommended for this type of waterproofing. Complete shower systems such as the USG™ Durock™ Brand Infinity Drain™ Shower System utilize fabric sheet waterproofing and a pre-sloped foam floor to achieve a fully waterproofed shower solution.

USING A CLAMPING FLOOR DRAIN/TILE FLOOR DRAIN:

PVC Membrane/Vinyl Liner (Polyvinyl Chloride)

A plastic sheet available at most plumbing suppliers and sold in rolls of 4', 5' and 6'. The membrane is layered between mortar beds and the corners are folded to create the shower pan liner. If the shower pan area is larger than the roll dimension, it must be seamed or joined together.

Lead Pan/Copper Pan

A metal sheet that is formed to create the shower pan area. The membrane is layered between mortar beds and the corners are folded to create the shower pan liner. If the shower pan area is larger than the sheet dimension, the lead material must be welded together. This install is more common in metropolitan areas where code may require a metal pan.

CPE Membrane (Chlorinated Polyethylene)

A rubber sheet available at most plumbing suppliers and sold in rolls of 4', 5' and 6'. The membrane is layered between mortar beds and corners are folded to create the shower pan liner. If the shower pan area is larger than the roll dimension, it must be seamed or joined together. CPE Membrane is also branded as Chloraloy® by Noble.

Hot Mop (Tar)

Heated liquid tar is applied or "mopped" on the shower area to create the shower pan and is similar to waterproofing a roof with tar. This installation is most common in California. Similar to fiberglass waterproofing.

USING A BONDED FLANGE:

Liquid

Roll or paint-on liquid membrane that can be applied on floors, walls, and ceilings and bonds directly to the drain flange. The total install time is shorter than traditional waterproofing methods and typically saves 2 to 3 days.

Fabric Sheet

Sheet membrane that bonds directly to the drain flange with an adhesive is sold by most tile suppliers. Corners (in and out) are available to avoid folding. If the shower pan area is larger than the roll dimensions, it must be seamed or joined together. Tile can bond directly to waterproofing.

Linear Drain Guide

Barrier Free Installation

Installing a shower drain without a curb, barrier, or threshold creates a seamless look with easy accessibility to the wet area. To achieve an ideal installation, floor heights should be equal between the shower area (wet area), outside the shower (dry area), and next room. Specific conditions will determine what is involved.

Linear Drain Placement

For a barrier free installation the most important factor to consider is the drain placement. The placement will affect installation and design options, build up amount and depression amount.

BACK WALL - parallel to shower entrance on opposite wall. (page 172)

THRESHOLD - parallel to shower entrance and along the entrance wall. (page 173-174)

SIDE WALL - perpendicular to shower entrance. (page 175)

Installation and Design Options

Installing a shower drain without a curb, barrier, or threshold creates a seamless look with easy accessibility to the wet area. To achieve an ideal installation, floor heights should be equal between the shower area (wet area), outside the shower (dry area), and next room.

Minimum Build Up at the Entrance of the Shower

Minimum build up at the entrance of the shower is calculated to determine if and how much the shower area must be depressed for a barrier free installation.

Waterproofing Method

The type of waterproofing will affect the amount of build up because of the height of the compatible drain and waste line connection type.

TRADITIONAL WATERPROOFING:
(PVC/Vinyl Liner, Lead/Copper Pan, Hot Mop, Rubber Liner, Fiberglass)

Traditional waterproofing has a larger overall build up due to taller channels and a clamp down drain installation. The channel height ranges from 1-7/16” to 2-3/8”.

LIQUID/FABRIC WATERPROOFING:
(Liquid Applied or Fabric Sheet Membrane)

Liquid/ Fabric waterproofing installations have less overall build up due to shallow channels and a no hub installation. The channel height ranges from 13/16” to 7/8”.

Linear Drain Guide

Barrier Free Installation

LINEAR DRAIN PLACEMENT:

PARALLEL TO SHOWER ENTRANCE

BACK WALL

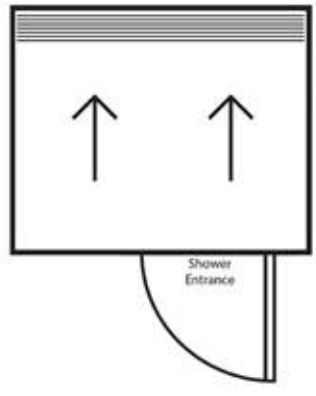

INSTALLATION AND DESIGN OPTIONS:

- Most flexible installation option
- Can be installed wall to wall, flush against the wall, or off of the walls
- Stock sizes can be used
- Any grate style can be used

The minimum buildup for a back wall installation is dependent on the depth of the shower and degree of slope.*

Example: 4' x 4' shower with a slope of ¼" per foot would have a slope of 1".

WATERPROOFING METHOD:

MINIMUM BUILD UP :

TRADITIONAL WATERPROOFING	LIQUID/ FABRIC WATERPROOFING
Drain Channel Height Above Subfloor **+ (Shower Depth (A) x 0.25)** **= Height at entrance of shower**	**Drain Channel Height Above Subfloor** **+ Tile Thickness** **+ Thinset Thickness** **+ (Shower Depth (A) x 0.25)** **= Height at entrance of shower**
2-7/16" to 3-3/8" (Varies by model)	**2-5/16" to 2-3/8"** (Varies by model)

*NOTE: Installer must verify all rough-in dimensions prior to installation and consult local and national codes. Conformity and compliance to local and national codes are the responsibility of the installer.

Linear Drain Guide

Barrier Free Installation

LINEAR DRAIN PLACEMENT:

PARALLEL TO SHOWER ENTRANCE

THRESHOLD

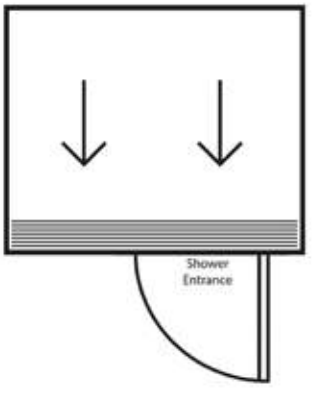

INSTALLATION AND DESIGN OPTIONS:

- Least amount of overall build up at the entrance of the shower - ideal for dealing with height restrictions
- Must be installed wall to wall
- Must work within stock dimensions, Site Sizable, or custom drain
- Narrow grate styles and Tile insert frames can not be used

The minimum buildup for a back wall installation is dependent on the height of the drain above the slab/subfloor.*

WATERPROOFING METHOD:

TRADITIONAL WATERPROOFING	LIQUID/ FABRIC WATERPROOFING
Drain Channel Height Above Subfloor	**Drain Channel Height Above Subfloor**
= Height at entrance of shower	**+ Tile Thickness**
	+ Thinset Thickness
	= Height at entrance of shower

MINIMUM BUILD UP :

1-7/16 to 2-3/8" (Varies by model)	**1-5/16 to 1-3/8"** (Varies by model)

*NOTE: Installer must verify all rough-in dimensions prior to installation and consult local and national codes. Conformity and compliance to local and national codes are the responsibility of the installer.

Linear Drain Guide

Barrier Free Installation

For threshold installs, we recommend the drain run exactly wall-to-wall to block any water from leaving the shower or wet area. We do not recommend thinner or tile-in type drains for threshold installations due to the lack of channel width needed to sufficiently catch the water. The FF, FCS, and FT series offer the lowest overall heights. In addition, we offer a product (ST 65 - pg 140) to allow channel to recess into subfloor an additional ¾". The dry side of the shower should have a slight pitch towards the linear system to ensure proper drainage. The entire wet and dry floor area should be waterproofed. Infinity Drain recommends working with a licensed professional who is familiar with local codes and installation requirements. The recommended models for a barrier free threshold installation are highlighted in pink below.

GRATE STYLES		Site Sizable [S]	Fixed Length [FX]	Fixed Flange [FF]	Side Outlet [FT]	Flange with Schluter® Kerdi [FCS]	Double Waterproofing [FCB]	Universal [U]
		Traditional Waterproofing		Liquid / Fabric Waterproofing		Schluter® Kerdi Waterproofing	Traditional ***and*** Liquid/Fabric	Traditional ***or*** Liquid/Fabric
Tile Insert	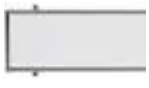	S-TIF 65 S-LTIF 65 S-TIFAS 65 S-TIFAS 99	FXTIF 65	FFTIF 65	FTTIF 65	FCSTIF 65	FCBTIF 65	UTIF
Slot				FFST		FCSST	FCBST	
2mm Wedge Wire				FFAS 25		FCSAS 25	FCBAS 25	
		S-LAG 38						
		S-LAG 65 S-AS 65 S-AS 99	FXAS 65	**FFAS 65**	**FTAS 65**	**FCSAS 65**	FCBAS 65	
		S-AG 100	FXAS 125	**FFAS 65**		**FCSAS 125**		
3mm Wedge Wire		S-AG 38						
		S-AG 65						
Circle	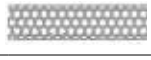	S-DG 38						
Circle	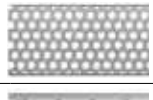	S-DG 65 S-DGAS 65 S-DGAS 99						
Offset Slotted		S-LT 38						
Offset Slotted	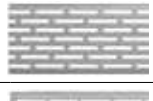	S-LT 65						
Slotted	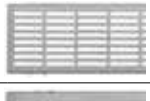		FXIG 65	**FFIG 65**	**FTIG 65**	**FCSIG 65**	FCBIG 65	
Offset Oval			FXED 65	**FFED 65**	**FTED 65**	**FCSED 65**	FCBED 65	
Marc Newson	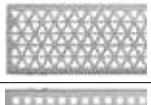		FXMN 65	**FFMN 65**	**FTMN 65**	**FCSMN 65**	FCBMN 65	
Squares	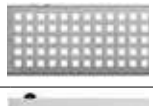							USQ
Solid			FXSG 65	FFSG 65	FTSG 65	FCSSG 65	FCBSG 65	

Linear Drain Guide

Barrier Free Installation

LINEAR DRAIN PLACEMENT:

PERPENDICULAR TO SHOWER ENTRANCE

SIDE WALL

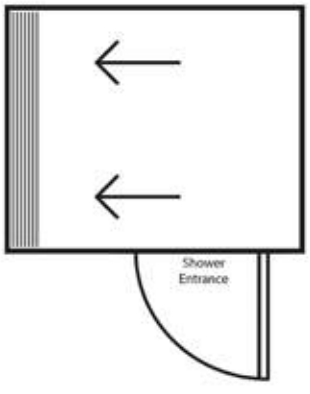

INSTALLATION AND DESIGN OPTIONS:

- Usually the most amount of build up
- Can create pitch challenges between wet and dry area
- Can be installed wall to wall, flush against the wall, or off of the walls
- Stock sizes can be used

Slab/subfloor must be depressed to allow the finished surface of the shower floor to be ½" - ⅝" below the finished surface of the dry area.*

Example: 4' x 4' foot shower with a slope of ¼" per foot would have a slope of 1".

WATERPROOFING METHOD:

TRADITIONAL WATERPROOFING	LIQUID/ FABRIC WATERPROOFING
Drain Channel Height Above Subfloor	**Drain Channel Height Above Subfloor**
+ (Shower Depth (A) x 0.25)	**+ Tile Thickness**
+ ½"	**+ Thinset Thickness**
	+ (Shower Depth (A) x 0.25)
	+ ½"
= Height at entrance of shower	**= Height at entrance of shower**

MINIMUM BUILD UP :

2-15/16" to 4-7/8" (Varies by model)	**2-13/16" to 2-7/8"** (Varies by model)

*NOTE: Installer must verify all rough-in dimensions prior to installation and consult local and national codes. Conformity and compliance to local and national codes are the responsibility of the installer.

Glossary

ABS	Type of plastic used for waste and drain fittings. Acrylonitrile butadiene styrene, commonly abbreviated ABS. Usually black in color.
ABS Primer / Glue	Primer - Substance used to prep or clean pipe prior to gluing (see solvent weld). ABS Glue is specifically used for ABS to ABS connections.
ADA Shower	A shower that meets requirements set by the Americans with Disabilities Act. Specific standard to floor drains requires the threshold or barrier transition for a roll-in shower to be no greater than 1/2" high.
Barrier Free Shower	A shower area without a curb or threshold to step over. Also called curbless.
Bolt Pattern	Top ring of a clamping floor drain. Bolt patterns can vary by drain manufacturer. ID makes universal clamping plates to accomadate exsisting clamping floor drains. (see UCP 2 and UCP 4 pg 116)
Bonded Flange	A drain body used for liquid membrane or fabric sheet waterproofing.
Cast Iron	A ferrous type of iron used in plumbing for waste pipes and drain bodies.
Center Pitch (4-Way Pitch)	Traditional tiled shower floors are pitched towards the center in four directions to allow proper drainage. If not pitched properly, water pools in areas of the shower.
Channel	The bottom portion of a linear drain. Also called trench, trough, channel body.
Clamping Floor Drain	Type of mechanically fastening floor drain that allows you to "clamp down" a PVC liner, Chloraloy liner, Lead Pan, Copper Pan, Fiberglass, or Hot Mop waterproofing methods.
Curb	Dam built to contain a shower area. Code specifies a minimum of 2" and a maximum 9" above the elevation of the finished drain.
Drain Connection Types	Method in which the drain body connects to waste line. (see No Hub, FIP, Inside Caulk and Slip Fit Connection)
End Caps	Component used to close the end of a channel assembly. PVC for S-AG, S-DG, and S-TIF Series. Stainless Steel for S-AS, S-DGAS, and S-TIFAS Series.
FIP	Female Iron Pipe - A female iron connection with a tapered thread that thins out to the end of the pipe. When tightened, the ever-decreasing thread depth makes the connection watertight.
Fixed (FX)	ID product series that is "Fixed" with a straight edge channel. Fixed models cannot be modified on site. This product uses "Traditional" waterproofing methods.
Fixed Flange (FF)	ID product series that is "Fixed" with a "Flanged" channel and bottom outlet. Fixed models cannot be modified on site. This product uses "Modern" waterproofing methods.
Fixed Tunnel (FT)	ID product series that is "Fixed" with a "Flanged" channel and side outlet. Fixed models cannot be modified on site. This product uses "Modern" waterproofing methods.
Floor Pitch / Slope	Floor height change to allow proper drainage. Standard pitch is 1/4" (2% slope) per foot and not more than 1/2" (4% slope) per foot towards the drain. International pitch 1/8" (1%) per foot.

Glossary

Flow Rate	Amount of water that passes the through the drain at the outlet. Calculated in gallons per minute (GPM).
GPM	Gallons Per Minute
Grate	The decorative top portion of a linear drain. Also called top grate, strainer, top grid, drain cover.
Grate Free Area (GFA)	Total area not covered by the grate. Calculated by determining area of opening on the top grate/strainer multiplied by the number of openings.
Head of water	The total energy at a given point in a fluid. Expressed in units of height.
Hot Mop	Waterproofing technique using liquid hot tar that cools to become a waterproof shower pan.
Inside Caulk	Type of floor drain connection that fits over the waste pipe. It is packed with an oakum and is further sealed using molten lead.
Joiners	Straight or 90 degree joiners used to connect channel lengths together. PVC for S-AG, S-DG, and S-TIF Series. Stainless Steel for S-AS, S-DGAS, and S-TIFAS Series.
Modern Waterproofing	Liquid membrane or fabric sheet waterproofing methods. Waterproofing is attached or painted onto the flange. Fixed Flange (FF), Flange Tunnel (FT), or Bonded Flange center drain.
No Hub	Type of floor drain connection where two pipes are connected with a rubber coupling (Fernco™).
NPS	Nominal Pipe Size (NPS) - North American set of standard sizes for pipes. Pipe size is specified with two non-dimensional numbers: diameter based on inches and a schedule (Sched. or Sch.) for pipe wall thickness.
NPT	National Pipe Thread Taper (NPT) - A U.S. standard for tapered threads used on threaded pipes and fittings.
Outlet	Open area where water exits the drain or channel.
Outlet Section	Component section of channel with a punch for the outlet. Specific to the S-AG 38, S-DG 38, S-AG 65, S-DG 65, S-TIF 65, S-AS 65, S-DGAS 65, and S-TIFAS 65 Series.
Outlet Assembly	Component section of channel that includes the outlet section welded to the threaded nipple for connection to the clamp down floor drain. Specific to the S-DGAS 99, S-AS 99, and S-TIFAS 99.
PVC	A type of plastic used for waste and drain fittings. Polyvinyl chloride, commonly abbreviated PVC. Usually white or gray in color.
PVC Primer/ Glue	Primer - Substance used to prep or clean pipe prior to gluing (see solvent weld). PVC Glue is specifically used for PVC to PVC connections.
Rescue Nipple	A longer version of the Threaded Nipple up to 4” used when the clamp down floor drain body is too deep in the subfloor.

Glossary

Rubber Coupling	A tubular flexible rubber device that joins two pipes together by tightening fastening clamps to create a watertight connection. Used to make a"No Hub" connection. Also known as a Fernco™.
Shower Pan	Waterproofed area in a shower enclosure.
Side Outlet	An outlet that is horizional going parrallel to the floor. Used to move waste lines with limited flexibility on site.
Single Plane Pitch	Shower floors pitched in one plane towards the linear drain channel. Used instead of a four-way pitch, common for a center drain.
Site Sizable™ (S)	ID product series that can be cut to length on site as well as locate the outlet anywhere on the channel run.
Slip Fit Connection	Type of floor drain connection for PVC and ABS fittings. One piece"slips" into the other snugly and is sealed (solvent weld) using appropriate glue type (ABS Glue or PVC Glue).
Solvent Weld	A molecular bond that fuses plastic to create a watertight seal. The fitting is primed (cleaned) then glued (welded) together using a material specific glue (ABS Glue or PVC Glue).
Stainless Steel	A steel alloy used to make Infintiy Drain grates and channels. Defined as a steel alloy with a minimum of 10.5% to 11% chromium content by mass.
Strainer	The decorative top portion of a drain. The overall dimension and shape may vary. The critical dimension to connect to the drain body is the strainer throat size.
Strainer Throat	A threaded male connection from the strainer. Threads into a drain body.
Sub-Floor	The material below a finished floor. Generally plywood or concrete.
Threaded Nipple	A threaded cylinder used to connect the linear drain channel to the clamp down floor drain.
TIF	Tile Insert Frame - A decorative grate that has an open area to add finished flooring material. Water drains into the channel via a 1/4" gap on all sides.
TIF Plates	A set of stainless steel plates used to reconnect shortened segments of a tile insert frame grate. Included in Site Sizable™ S-TIF and S-TIFAS Series complete kits.
Tile Insert	ID center pitch drain that allows tile to be placed inside the center frame. TD, TDB, LTD, RTD Series.
Top Ring/ Drain Throat	A threaded female connection top ring that bolts to body of clamp down floor drain. Infinity Drain offers universal clamping plates to accomadate exsisting floor drains. (see UCP 2 and UCP 4 pg 116)
Traditional Waterproofing	PVC liner, Chloraloy liner, Lead Pan, Copper Pan, Fiberglass or Hot Mop waterpoofing methods with a clamp down floor drain.

Glossary

Wall Build-Out Adding additional backer board and/or packing out a wall with additional material to create a flush against the wall installation for the Site Sizable™ (S) and Fixed (FX) Series.

Wedge Wire A high grade 316L stainless steel, welded, longitudinal decorative grid grate used on the WD 5, WDB 5, S-AS, S-AG, FXAS, FFAS, and FTAS Series.

Weep Holes Holes on a clamp down floor drain intended to"weep" away water below a tiled floor. During installation it is important these do not get clogged by mortar or thinset.

Terms and Conditions

Applicability

These terms and conditions ("Terms") are the only terms which govern the sale of the merchandise by Infinity Drain Ltd. ("Infinity Drain") to the dealer and/or customer purchasing the merchandise (in either such case, the "Recipient"). Notwithstanding anything herein to the contrary, if a written contract signed by both parties is in existence covering the sale of the merchandise covered hereby, the terms and conditions of said contract shall prevail to the extent they are inconsistent with these Terms.

The accompanying invoice and these Terms comprise the entire agreement between the parties, and supersede all prior or contemporaneous understandings, agreements, negotiations, representations and warranties, and communications, both written and oral. These Terms prevail over any of the Recipient's general terms and conditions of purchase regardless whether or when such Recipient has submitted its purchase order or such terms. Fulfillment of a Recipient order does not constitute acceptance of any of the Recipient's terms and conditions and does not serve to modify or amend these Terms.

Price and Payment Terms

The Recipient shall purchase the merchandise from Infinity Drain at the price(s) (the "Price(s)") set forth in Infinity Drain's published price book in force as of the date that Infinity Drain accepts Recipient's purchase order.

All Prices are exclusive of all sales, use and excise taxes, and any other similar taxes, duties and charges of any kind imposed by any governmental authority.

Recipient shall pay all invoiced amounts due to Infinity Drain within thirty (30) days of issuance of Infinity Drain's invoice. Recipient shall make all payments hereunder by wire transfer/check/credit card/ACH payment and in U.S. dollars (and in Canadian dollars (CAD) for Recipients located in Canada). Credit card transactions are subject to a two-and-a-half percent (2.5%) processing fee. Recipient shall pay interest on all late payments at the lesser of: (i) the rate of one-and-a-half percent (1.5%) per month, or (ii) the highest rate permissible under applicable law, calculated daily and compounded monthly.

Recipient shall reimburse Infinity Drain for all costs incurred in collecting any late payments, including, without limitation, court costs, collection agency fees and/or attorneys' fees. Administrative fees of fifteen percent (15%) will be added to the interest charges on all overdue accounts when payment is obtained through a collection agency. In addition to all other remedies available under these Terms or at law (which Infinity Drain does not waive by the exercise of any rights hereunder), Infinity Drain shall be entitled to suspend the delivery of any merchandise if Recipient fails to pay any amounts when due hereunder and such failure continues for five (5) days following written notice thereof. Recipient shall not withhold payment of any amounts due and payable by reason of any set-off of any claim or dispute with Infinity Drain, whether relating to Infinity Drain's breach, bankruptcy or otherwise.

Terms and Conditions

Limited Lifetime Warranty

This Limited Lifetime Warranty is extended only to the original purchaser of the unit under warranty and is valid only when bought through and registered by an authorized Infinity Drain retailer.

Exclusions

The above-stated limited lifetime warranty applies as long as damage is not caused by an accident, abuse, misuse, fire, insects, use of abrasive products or an act of God. Transport, handling or installation damages are also excluded. Any part that must be changed during the warranty period will be covered by the original warranty or for a two (2) year period following replacement, according to the first contingency.

Procedure

Any defect involving the manufacturer's liability shall be reported to Infinity Drain within ten (10) days of its occurrence. Drains claimed to be defective shall be held until inspected by an authorized representative of Infinity Drain, and upon their specific instructions, drains found to be defective will be repaired and replaced at Infinity Drain's choice. The liability of Infinity Drain with respect to the sale of this drain shall be limited to repair or replacement by a similar product as provided above and does not include any cost of removal, reinstallation, transport of defective product, loss of time, salary or any other expenses as well as any consequential damages of any kind. Infinity Drain and its representatives shall not be held liable for any injury, loss, cost or other damage, whether consequential or incidental, that arise from any defect covered under this limited warranty, even if Infinity Drain has been advised of the possibility of such damage.

Limitations

This Limited Lifetime Warranty replaces all other warranties, expressed or implied, in face or at law, including implied warranties of merchantability and fitness for a particular purpose. The terms of this limited warranty cannot be modified or extended in any way whatsoever by any agency, dealer, distributor, service company or other party other than Infinity Drain.

Legal Rights

This Limited Warranty gives specific legal rights and is not applicable if it interferes with any law or regulation in any state, province or country.

Terms and Conditions

Lifetime Product Guarantee
(INFINITY DRAIN, LTD. STAINLESS STEEL SHOWER BASE)

Infinity Drain products have been manufactured under the highest standards of quality and workmanship. Infinity Drain provides a lifetime guarantee on its stainless steel shower base (INFINITY DRAIN SSB SERIES only).

This guarantee is extended to the original installer of the product, the owner/developer of the installation site and the original owner of the finished product site (homeowner or landlord). This guarantee DOES NOT extend to any subsequent owners or users of the property. This lifetime coverage terminates upon the sale of the property to a subsequent owner of the property.

Infinity Drain guarantees that our stainless steel shower base (INFINITY DRAIN SSB SERIES) will be free from any and all leaks as well as free from defects in material and manufacturing workmanship, when subject to normal use during the lifetime of the original owner as stated above.

If the aforementioned Infinity Drain product should develop a leak during the guarantee period as defined above, Infinity Drain will provide a replacement shower base (INFINITY DRAIN SSB SERIES) at no cost to the claimant under the guarantee. Infinity Drain will further bear the cost of labor to remove and replace the defective Infinity Drain product and will restore the installation with the same “like and kind” materials originally used at no cost to the claimant.

THIS GUARANTEE IS APPLICABLE ONLY TO STAINLESS STEEL SHOWER BASES (INFINITY DRAIN SSB SERIES) purchased directly from INFINITY DRAIN or AN AUTHORIZED INFINITY DRAIN RETAILER AFTER MAY 1, 2019. NOTWITHSTANDING ANYTHING TO THE CONTRARY HEREIN, THE MAXIMUM LIABILITY OF EACH INCIDENT SHALL NOT EXCEED $100 PER SQUARE FOOT FOR RESTORING THE INSTALLATION TO ITS ORIGINALLY INSTALLED CONDITION.

THIS GUARANTEE IS SUBJECT TO THE FOLLOWING LIMITIATIONS:

1. The guaranteed product must have been installed in accordance with the manufacturer’s explicit installation instructions. Products not installed in this manner WILL NOT be COVERED.

2. Installation must be completed using any and all Infinity Drain recommended products, materials and procedures, where applicable.

3. Infinity Drain shall solely determine whether the product was installed according to its installation instructions. Improper or inferior installation of such product will also expressly void this guarantee.

Terms and Conditions

4. Any alteration to, or modification of the original design and manufacture of the Infinity Drain Stainless Steel Shower Base (INFINITY DRAIN SSB SERIES) will result in the voiding of this lifetime guarantee.

5. The original owner shall have the burden of establishing to Infinity Drain's reasonable satisfaction: (a) the date of the purchase of the product (b) that the product was purchased directly from Infinity Drain or an authorized retailer of Infinity Drain (c) the original owner's current ownership of the premises in which Infinity Drain's product was installed.

6. This guarantee will not cover claims for the following:

(a) Damage to or failure of the guaranteed product resulting from acts of the homeowner, the installer or another third party

(b) Damage to or failure of the product resulting from unreasonable use or the failure to reasonably maintain the product after the date of purchase

(c) Damage due to installation error, product abuse, product misuse, or use of cleaners containing abrasives, or other organic or chemical solvents, whether performed by a contractor, service company, or the purchaser are excluded from this guarantee

(d) Damage due to criminal acts, acts of terrorism or acts of god

7. Infinity Drain will not be responsible for labor charges and/or damage incurred in installation, repair or replacement (other than those completed by an authorized Infinity Drain representative) in addressing a guarantee claim.

8. THE PROVISIONS OF THIS GUARANTEE ARE IN LIEU OF ANY OTHER GUARANTEE, EITHER EXPRESS OR IMPLIED, INCLUDING SPECIFICALLY, BUT NOT LIMITED TO, ANY GUARANTEE OF MERCHANTABILITY OR FITNESS FOR A PARTICULAR PURPOSE.

9. THE OBLIGATIONS AND LIABILITIES OF INFINITY DRAIN UNDER THIS GUARANTEE OR UNDER ANY IMPLIED GUARANTEE WHICH IS APPLICABLE DESPITE THE PRECEEDING DISCLAIMER ARE IN LIEU OF ALL OTHER OBLIGATIONS OR LIABILITIES INCLUDING, WITHOUT LIMITATION, LIABILITY FOR INCIDENTAL, CONSEQUENTIAL AND/OR ANY OTHER DAMAGES BASED UPON ANY THEORY OF RECOVERY AT LAW OR IN EQUITY. THESE INCLUDE SPECIFICALLY ANY THEORY OR NEGLIGENCE, BREACH OF CONTRACT, BREACH OF GUARANTEE OR STRICT LIABILITY.

THIS GUARANTEE IS SUBJECT TO THE FOLLOWING CUSTOMER RESPONSIBILITIES:
The guarantee claimant must notify Infinity Drain within thirty (30) days of discovering the basis for a claim under this guarantee. This notice must be made IN WRITING and MUST PROVIDE proof of the date of purchase of the STAINLESS STEEL SHOWER BASE (INFINITY DRAIN SSB SERIES) from

either INFINITY DRAIN directly, or through an AUTHORIZED INFINITY DRAIN RETAILER, as well as proof of CURRENT ownership of the property where the product is located.

All notifications must be sent via EMAIL to: claims@infinitydrain.com

Furthermore, the claimant may be required to submit photographic evidence, or other requested documentation, to Infinity Drain, along with or subsequent to their submission of a claim. Infinity Drain will then investigate the claim in a timely manner. If a defect covered by this guarantee is confirmed by Infinity Drain, Infinity Drain will satisfy its obligation set forth under this guarantee within a reasonable amount of time.

Infinity Drain MUST BE ALLOWED a reasonable opportunity to determine and fulfill its obligations under this guarantee before the original owner or others take any step to make repairs. Furthermore, Infinity Drain or its contractors or representatives must be given access, during regular business hours, to the site of the claim as needed. The claimant's failure to abide by the terms of this provision shall void any and all responsibility of Infinity Drain.

Terms and Conditions

Delivery and Exclusions

Transport, handling or installation damages are excluded from the Limited Warranty. The merchandise will be delivered within a reasonable time after the receipt of Recipient's purchase order, subject to the availability of the merchandise. Infinity Drain shall not be liable for any delays, loss or damage in transit of any merchandise.

Infinity Drain shall not be liable for any non-delivery of merchandise (even if caused by Infinity Drain's negligence) unless Recipient gives written notice to Infinity Drain of the non-delivery within five (5) days of the date when the merchandise would in the ordinary course of events have been received. Any liability of Infinity Drain for non-delivery of merchandise shall be limited to, at infinity Drain's option, either: (i) replacing the merchandise within a reasonable time, or (ii) adjusting any applicable invoice respecting such merchandise to reflect the actual quantity delivered.

Any merchandise that must be changed or replaced pursuant to the Limited Warranty will be itself warranted up until a two (2) year period following any such change or replacement. Infinity Drain shall not be liable or responsible to any Recipient, nor be deemed to have defaulted or breached these Terms, for any failure or delay in fulfilling or performing any term of these Terms when and to the extent such failure or delay is caused by or results from acts or circumstances beyond the reasonable control of Infinity Drain including, without limitation, acts of God, flood, fire, earthquake, explosion, governmental actions, war, invasion or hostilities (whether war is declared or not), terrorist threats or acts, riot, other civil unrest, national emergency, revolution, insurrection, epidemic, lockouts, strikes or other labor disputes (whether or not relating to either party's workforce), restraints or delays affecting carriers or inability or delay in obtaining supplies of adequate or suitable materials, materials, telecommunication breakdown, power outage or any other force majeure event.

Limitation of Liability

INFINITY DRAIN MAKES NO WARRANTY WHATSOEVER WITH RESPECT TO ITS MERCHANDISE, INCLUDING WITHOUT LIMITATION ANY: (A) WARRANTY OF MERCHANTABILITY; (B) WARRANTY OF FITNESS FOR A PARTICULAR PURPOSE; (C) WARRANTY OF TITLE; OR (D) WARRANTY AGAINST INFRINGEMENT OF INTELLECTUAL PROPERTY RIGHTS OF A THIRD PARTY; WHETHER EXPRESS OR IMPLIED BY LAW, COURSE OF DEALING, COURSE OF PERFORMANCE, USAGE OF TRADE OR OTHERWISE.

THE REMEDIES SET FORTH IN THESE TERMS SHALL BE THE RECIPIENT'S SOLE AND EXCLUSIVE REMEDY AND INFINITY DRAIN'S ENTIRE LIABILITY FOR ANY BREACH OF THE LIMITED WARRANTY SET FORTH IN THESE TERMS.

IN NO EVENT SHALL INFINITY DRAIN BE LIABLE TO RECIPIENT OR ANY THIRD PARTY FOR ANY LOSS OF USE, REVENUE OR PROFIT, OR FOR ANY CONSEQUENTIAL, INDIRECT, INCIDENTAL, SPECIAL, EXEMPLARY, OR PUNITIVE DAMAGES WHETHER ARISING OUT OF BREACH OF CONTRACT, TORT (INCLUDING NEGLIGENCE) OR OTHERWISE, REGARDLESS OF WHETHER SUCH DAMAGES WERE FORESEEABLE AND WHETHER OR NOT RECIPIENT

HAS BEEN ADVISED OF THE POSSIBILITY OF SUCH DAMAGES, AND NOTWITHSTANDING THE FAILURE OF ANY AGREED OR OTHER REMEDY OF ITS ESSENTIAL PURPOSE.

IN NO EVENT SHALL INFINITY DRAIN'S AGGREGATE LIABILITY ARISING OUT OF OR RELATED TO THESE TERMS, WHETHER ARISING OUT OF OR RELATED TO BREACH OF CONTRACT, TORT (INCLUDING NEGLIGENCE) OR OTHERWISE, EXCEED THE TOTAL OF THE AMOUNTS PAID TO INFINITY DRAIN FOR THE MERCHANDISE SOLD HEREUNDER.

Claims, Returns and Restocking Charges

All claims for damages and shortages in connection with any delivery must be reported to Infinity Drain in writing within five (5) days of delivery. Please notify customer service within thirty (30) days of any missing parts or defects. Merchandise may not be returned for any reason without prior written consent from Infinity Drain. Infinity Drain reserves the right to refuse a return on a non-standard drain. Returns will not be accepted unless an RGA number from Infinity Drain is clearly marked on each box. The RGA must be obtained by emailing RGA@infinitydrain.com . A specialist will review the RGA request, and upon approval will issue the RGA number. Merchandise may be returned up to ninety (90) days from date of receipt. RGA numbers are valid for thirty (30) days from issue date. Merchandise must be received within thirty (30) days from the RGA date of issue. All items will be subject to inspection by Infinity Drain. All items must be returned unused and in original condition, including packaging, components part, and all other container contents. A minimum of the greater of: (i) a twenty-five percent (25%) charge on the Recipient's base net price, or (ii) $25.00, will be imposed as a restocking charge for each returned item accepted by Infinity Drain, in addition to all applicable charges for labor, materials and/or freight. All returned merchandise must be shipped freight prepaid.

Modifications

Infinity Drain reserves the right to change, without notice, the models, the specifications and the price of its merchandise. Infinity Drain also reserves the right to change these Terms & Conditions without notice.

Merchandise Ownership and Insurance

Infinity Drain will remain the owner of all merchandise sold until full and final payment of the invoice is received by Infinity Drain. Until such time that an invoice is paid in full, the Recipient must take reasonable care of the Infinity Drain merchandise and will be held responsible for all losses and damages when in possession of the merchandise. During the term of these Terms and for a period of two (2) years thereafter, the Recipient shall, at its own expense, maintain and carry insurance in full force and effect which includes, but is not limited to, commercial general liability (including product liability) in a sum no less than one million dollars ($1,000,000.00) with financially sound and reputable insurers. Upon Infinity Drain's request, Recipient shall provide Infinity Drain with a certificate of insurance from Recipient's insurer evidencing the insurance coverage specified in these Terms. Recipient shall provide Infinity Drain with ten (10) days' advance written notice in the event of a cancellation or material change in Recipient's insurance policy.

Terms and Conditions

Advising Obligations

In the case of a dealer, such dealer agrees to advise Infinity Drain in writing of all seizures, losses or damages that involve any Infinity Drain merchandise in dealer's inventory for which Infinity Drain has not been paid in full, within three (3) business days of becoming aware of all such seizures, losses or damages.

Intellectual Property Rights and Other Proprietary Rights

Each Recipient acknowledges that all intellectual property rights and other proprietary rights regarding Infinity Drain's business, activities, merchandise, and promotional material, and any technology pertaining thereto, are the sole property of Infinity Drain. Each Recipient agrees to limit its use of Infinity Drain's intellectual property rights and other proprietary rights to only those uses expressly authorized by Infinity Drain. Each Recipient agrees to promptly and fully inform Infinity Drain of any infringement or alleged infringement of any Infinity Drain intellectual property rights or other proprietary rights by any person, including any competitor of Infinity Drain, of which such Recipient may become aware.

Freight Charges

Freight charges apply to drains, as well as residential, commercial and construction site drop shipments. Other shipping charges such as re-consignment, redelivery and storage charges may apply when requested by a Recipient. Please contact Infinity Drain's order desk for applicable fees.

Cancellation Policy

All stock orders cancelled after forty-eight (48) hours will incur a ten percent (10%) cancellation charge.

General Terms

All matters arising out of or relating to these Terms shall be governed by and construed in accordance with the laws of the State of New York without giving effect to any choice or conflict of law provision. Any legal suit, action or proceeding arising out of or relating to these Terms shall be instituted in the state courts located in Suffolk County, New York or the federal courts of the United States of America located in Suffolk County, New York, and each party irrevocably submits to the exclusive jurisdiction of such courts in any such suit, action or proceeding.

If any term or provision of these Terms is held invalid, illegal or unenforceable by a Court of competent jurisdiction, such invalidity, illegality or unenforceability shall not affect any

other term or provision of these Terms or invalidate or render unenforceable such term or provision in any other jurisdiction. No waiver by Infinity Drain of any of the provisions of these Terms is effective unless explicitly set forth in writing and signed by Infinity Drain. No failure to exercise, or delay in exercising, any right, remedy, power or privilege arising from these Terms operates, or may be construed, as a waiver thereof. No single or partial exercise of any right, remedy, power or privilege hereunder precludes any other or further exercise thereof or the exercise of any other right, remedy, power or privilege.

These Terms cannot be modified or extended in any way whatsoever by any agent, dealer, distributor, service company, customer or other party other than by a writing signed by an authorized representative of Infinity Drain.

Compliance with Law

The Recipient shall comply with all applicable laws, regulations and ordinances and shall maintain in effect all the licenses, permissions, authorizations, consents and permits that it needs to carry out its obligations under these Terms.

Termination

In addition to any remedies that may be provided under these Terms, Infinity Drain may terminate these Terms with immediate effect upon written notice to Recipient, if such Recipient: (i) fails to pay any amount when due under these Terms; (ii) has not otherwise performed or complied with any of these Terms, in whole or in part; or (iii) becomes insolvent, files a petition for bankruptcy or commences or has commenced against it proceedings relating to bankruptcy, receivership, reorganization or assignment for the benefit of creditors.

Price Sheet & Index

SKU	List Price	Page #	Shipping Dimensions (inches)			
			Lbs	L	W	H
A 10048 BK	$1,175.00	117	9	53	7	7
A 10048 ORB	$1,175.00	117	9	53	7	7
A 10048 PS	$1,175.00	117	9	53	7	7
A 10048 SB	$1,175.00	117	9	53	7	7
A 10048 SS	$880.00	117	9	53	7	7
A 3836 BK	$675.00	113	7	41	7	7
A 3836 ORB	$675.00	113	7	41	7	7
A 3836 PS	$675.00	113	7	41	7	7
A 3836 SB	$675.00	113	7	41	7	7
A 3836 SS	$515.00	113	7	41	7	7
A 3848 BK	$715.00	113	8	53	7	7
A 3848 ORB	$715.00	113	8	53	7	7
A 3848 PS	$715.00	113	8	53	7	7
A 3848 SB	$715.00	113	8	53	7	7
A 3848 SS	$550.00	113	8	53	7	7
A 3860 BK	$850.00	113	10	65	7	7
A 3860 ORB	$850.00	113	10	65	7	7
A 3860 PS	$850.00	113	10	65	7	7
A 3860 SB	$850.00	113	10	65	7	7
A 3860 SS	$715.00	113	10	65	7	7
A 3872 BK	$1,165.00	113	11	78	7	7
A 3872 ORB	$1,165.00	113	11	78	7	7
A 3872 PS	$1,165.00	113	11	78	7	7
A 3872 SB	$1,165.00	113	11	78	7	7
A 3872 SS	$860.00	113	11	78	7	7
A 6536 BK	$910.00	115	8	41	7	7
A 6536 ORB	$910.00	115	8	41	7	7
A 6536 PS	$910.00	115	8	41	7	7
A 6536 SB	$910.00	115	8	41	7	7
A 6536 SS	$745.00	115	8	41	7	7
A 6548 BK	$940.00	115	10	53	7	7
A 6548 ORB	$940.00	115	10	53	7	7
A 6548 PS	$940.00	115	10	53	7	7
A 6548 SB	$940.00	115	10	53	7	7
A 6548 SS	$785.00	115	10	53	7	7
A 6560 BK	$1,020.00	115	12	65	7	7
A 6560 ORB	$1,020.00	115	12	65	7	7
A 6560 PS	$1,020.00	115	12	65	7	7
A 6560 SB	$1,020.00	115	12	65	7	7
A 6560 SS	$920.00	115	12	65	7	7
A 6572 BK	$1,365.00	115	13	78	7	7
A 6572 ORB	$1,365.00	115	13	78	7	7
A 6572 PS	$1,365.00	115	13	78	7	7
A 6572 SB	$1,365.00	115	13	78	7	7

SKU	List Price	Page #	Shipping Dimensions (inches)			
			Lbs	L	W	H
A 6572 SS	$1,240.00	115	13	78	7	7
AKEY	$5.00	140	1	4	4	4
BA 6524 BK	$620.00	124	3.5	30	7	7
BA 6524 ORB	$620.00	124	3.5	30	7	7
BA 6524 PS	$620.00	124	3.5	30	7	7
BA 6524 SB	$620.00	124	3.5	30	7	7
BA 6524 SS	$475.00	124	3.5	30	7	7
BA 6532 BK	$640.00	124	4	37	7	7
BA 6532 ORB	$640.00	124	4	37	7	7
BA 6532 PS	$640.00	124	4	37	7	7
BA 6532 SB	$640.00	124	4	37	7	7
BA 6532 SS	$540.00	124	4	37	7	7
BA 6536 BK	$660.00	124	5.5	41	7	7
BA 6536 ORB	$660.00	124	5.5	41	7	7
BA 6536 PS	$660.00	124	5.5	41	7	7
BA 6536 SB	$660.00	124	5.5	41	7	7
BA 6536 SS	$555.00	124	5.5	41	7	7
BA 6542 BK	$715.00	124	7	47	7	7
BA 6542 ORB	$715.00	124	7	47	7	7
BA 6542 PS	$715.00	124	7	47	7	7
BA 6542 SB	$715.00	124	7	47	7	7
BA 6542 SS	$570.00	124	7	47	7	7
BA 6548 BK	$735.00	124	8.5	53	7	7
BA 6548 ORB	$735.00	124	8.5	53	7	7
BA 6548 PS	$735.00	124	8.5	53	7	7
BA 6548 SB	$735.00	124	8.5	53	7	7
BA 6548 SS	$580.00	124	8.5	53	7	7
BA 6560 BK	$890.00	124	10	65	7	7
BA 6560 ORB	$890.00	124	10	65	7	7
BA 6560 PS	$890.00	124	10	65	7	7
BA 6560 SB	$890.00	124	10	65	7	7
BA 6560 SS	$740.00	124	10	65	7	7
BCC-3060-SS	$3,395.00	135	80	62	30	13
BCC-3060-PS	$3,395.00	135	80	62	30	13
BCC-3060-ORB	$3,395.00	135	80	62	30	13
BCC-3060-SB	$3,395.00	135	80	62	30	13
BCC-3060-BK	$3,395.00	135	80	62	30	13
BCC-3060NS-BK	$3,530.00	94	80	62	30	13
BCC-3060NS-ORB	$3,530.00	94	80	62	30	13
BCC-3060NS-PS	$3,530.00	94	80	62	30	13
BCC-3060NS-SB	$3,530.00	94	80	62	30	13
BCC-3060NS-SS	$3,495.00	94	80	62	30	13
BCC-3060QS-BK	$3,530.00	93	80	62	30	13
BCC-3060QS-ORB	$3,530.00	93	80	62	30	13

Price Sheet & Index

SKU	List Price	Page #	Shipping Dimensions (inches)			
			Lbs	L	W	H
BCC-3060QS-PS	$3,530.00	93	80	62	30	13
BCC-3060QS-SB	$3,530.00	93	80	62	30	13
BCC-3060QS-SS	$3,495.00	93	80	62	30	13
BCC-3060TI-BK	$3,565.00	92	80	62	30	13
BCC-3060TI-ORB	$3,565.00	92	80	62	30	13
BCC-3060TI-PS	$3,565.00	92	80	62	30	13
BCC-3060TI-SB	$3,565.00	92	80	62	30	13
BCC-3060TI-SS	$3,530.00	92	80	62	30	13
BCC-3060WS-BK	$3,615.00	91	80	62	30	13
BCC-3060WS-ORB	$3,615.00	91	80	62	30	13
BCC-3060WS-PS	$3,615.00	91	80	62	30	13
BCC-3060WS-SB	$3,615.00	91	80	62	30	13
BCC-3060WS-SS	$3,580.00	91	80	62	30	13
BCC-H-3060-SS	$3,395.00	135	80	62	30	13
BCC-H-3060-PS	$3,395.00	135	80	62	30	13
BCC-H-3060-ORB	$3,395.00	135	80	62	30	13
BCC-H-3060-SB	$3,395.00	135	80	62	30	13
BCC-H-3060-BK	$3,395.00	135	80	62	30	13
BCC-H-3060NS-BK	$3,530.00	94	80	62	30	13
BCC-H-3060NS-ORB	$3,530.00	94	80	62	30	13
BCC-H-3060NS-PS	$3,530.00	94	80	62	30	13
BCC-H-3060NS-SB	$3,530.00	94	80	62	30	13
BCC-H-3060NS-SS	$3,495.00	94	80	62	30	13
BCC-H-3060QS-BK	$3,530.00	93	80	62	30	13
BCC-H-3060QS-ORB	$3,530.00	93	80	62	30	13
BCC-H-3060QS-PS	$3,530.00	93	80	62	30	13
BCC-H-3060QS-SB	$3,530.00	93	80	62	30	13
BCC-H-3060QS-SS	$3,495.00	93	80	62	30	13
BCC-H-3060TI-BK	$3,565.00	92	80	62	30	13
BCC-H-3060TI-ORB	$3,565.00	92	80	62	30	13
BCC-H-3060TI-PS	$3,565.00	92	80	62	30	13
BCC-H-3060TI-SB	$3,565.00	92	80	62	30	13
BCC-H-3060TI-SS	$3,530.00	92	80	62	30	13
BCC-H-3060WS-BK	$3,615.00	91	80	62	30	13
BCC-H-3060WS-ORB	$3,615.00	91	80	62	30	13
BCC-H-3060WS-PS	$3,615.00	91	80	62	30	13
BCC-H-3060WS-SB	$3,615.00	91	80	62	30	13
BCC-H-3060WS-SS	$3,580.00	91	80	62	30	13
BCL-3060-SS	$3,395.00	135	80	62	30	13
BCL-3060-PS	$3,395.00	135	80	62	30	13
BCL-3060-ORB	$3,395.00	135	80	62	30	13
BCL-3060-SB	$3,395.00	135	80	62	30	13
BCL-3060-BK	$3,395.00	135	80	62	30	13
BCL-3060NS-BK	$3,530.00	94	80	62	30	13

SKU	List Price	Page #	Shipping Dimensions (inches)			
			Lbs	L	W	H
BCL-3060NS-ORB	$3,530.00	94	80	62	30	13
BCL-3060NS-PS	$3,530.00	94	80	62	30	13
BCL-3060NS-SB	$3,530.00	94	80	62	30	13
BCL-3060NS-SS	$3,495.00	94	80	62	30	13
BCL-3060QS-BK	$3,530.00	93	80	62	30	13
BCL-3060QS-ORB	$3,530.00	93	80	62	30	13
BCL-3060QS-PS	$3,530.00	93	80	62	30	13
BCL-3060QS-SB	$3,530.00	93	80	62	30	13
BCL-3060QS-SS	$3,495.00	93	80	62	30	13
BCL-3060TI-BK	$3,565.00	92	80	62	30	13
BCL-3060TI-ORB	$3,565.00	92	80	62	30	13
BCL-3060TI-PS	$3,565.00	92	80	62	30	13
BCL-3060TI-SB	$3,565.00	92	80	62	30	13
BCL-3060TI-SS	$3,530.00	92	80	62	30	13
BCL-3060WS-BK	$3,615.00	91	80	62	30	13
BCL-3060WS-ORB	$3,615.00	91	80	62	30	13
BCL-3060WS-PS	$3,615.00	91	80	62	30	13
BCL-3060WS-SB	$3,615.00	91	80	62	30	13
BCL-3060WS-SS	$3,580.00	91	80	62	30	13
BCL-H-3060-SS	$3,395.00	135	80	62	30	13
BCL-H-3060-PS	$3,395.00	135	80	62	30	13
BCL-H-3060-ORB	$3,395.00	135	80	62	30	13
BCL-H-3060-SB	$3,395.00	135	80	62	30	13
BCL-H-3060-BK	$3,395.00	135	80	62	30	13
BCL-H-3060NS-BK	$3,530.00	94	80	62	30	13
BCL-H-3060NS-ORB	$3,530.00	94	80	62	30	13
BCL-H-3060NS-PS	$3,530.00	94	80	62	30	13
BCL-H-3060NS-SB	$3,530.00	94	80	62	30	13
BCL-H-3060NS-SS	$3,495.00	94	80	62	30	13
BCL-H-3060QS-BK	$3,530.00	93	80	62	30	13
BCL-H-3060QS-ORB	$3,530.00	93	80	62	30	13
BCL-H-3060QS-PS	$3,530.00	93	80	62	30	13
BCL-H-3060QS-SB	$3,530.00	93	80	62	30	13
BCL-H-3060QS-SS	$3,495.00	93	80	62	30	13
BCL-H-3060TI-BK	$3,565.00	92	80	62	30	13
BCL-H-3060TI-ORB	$3,565.00	92	80	62	30	13
BCL-H-3060TI-PS	$3,565.00	92	80	62	30	13
BCL-H-3060TI-SB	$3,565.00	92	80	62	30	13
BCL-H-3060TI-SS	$3,530.00	92	80	62	30	13
BCL-H-3060WS-BK	$3,615.00	91	80	62	30	13
BCL-H-3060WS-ORB	$3,615.00	91	80	62	30	13
BCL-H-3060WS-PS	$3,615.00	91	80	62	30	13
BCL-H-3060WS-SB	$3,615.00	91	80	62	30	13
BCL-H-3060WS-SS	$3,580.00	91	80	62	30	13

Price Sheet & Index

SKU	List Price	Page #	Shipping Dimensions (inches)			
			Lbs	L	W	H
BCR-3060-SS	$3,395.00	135	80	62	30	13
BCR-3060-PS	$3,395.00	135	80	62	30	13
BCR-3060-ORB	$3,395.00	135	80	62	30	13
BCR-3060-SB	$3,395.00	135	80	62	30	13
BCR-3060-BK	$3,395.00	135	80	62	30	13
BCR-3060NS-BK	$3,530.00	94	80	62	30	13
BCR-3060NS-ORB	$3,530.00	94	80	62	30	13
BCR-3060NS-PS	$3,530.00	94	80	62	30	13
BCR-3060NS-SB	$3,530.00	94	80	62	30	13
BCR-3060NS-SS	$3,495.00	94	80	62	30	13
BCR-3060QS-BK	$3,530.00	93	80	62	30	13
BCR-3060QS-ORB	$3,530.00	93	80	62	30	13
BCR-3060QS-PS	$3,530.00	93	80	62	30	13
BCR-3060QS-SB	$3,530.00	93	80	62	30	13
BCR-3060QS-SS	$3,495.00	93	80	62	30	13
BCR-3060TI-BK	$3,565.00	92	80	62	30	13
BCR-3060TI-ORB	$3,565.00	92	80	62	30	13
BCR-3060TI-PS	$3,565.00	92	80	62	30	13
BCR-3060TI-SB	$3,565.00	92	80	62	30	13
BCR-3060TI-SS	$3,530.00	92	80	62	30	13
BCR-3060WS-BK	$3,615.00	91	80	62	30	13
BCR-3060WS-ORB	$3,615.00	91	80	62	30	13
BCR-3060WS-PS	$3,615.00	91	80	62	30	13
BCR-3060WS-SB	$3,615.00	91	80	62	30	13
BCR-3060WS-SS	$3,580.00	91	80	62	30	13
BCR-H-3060-SS	$3,395.00	135	80	62	30	13
BCR-H-3060-PS	$3,395.00	135	80	62	30	13
BCR-H-3060-ORB	$3,395.00	135	80	62	30	13
BCR-H-3060-SB	$3,395.00	135	80	62	30	13
BCR-H-3060-BK	$3,395.00	135	80	62	30	13
BCR-H-3060NS-BK	$3,530.00	94	80	62	30	13
BCR-H-3060NS-ORB	$3,530.00	94	80	62	30	13
BCR-H-3060NS-PS	$3,530.00	94	80	62	30	13
BCR-H-3060NS-SB	$3,530.00	94	80	62	30	13
BCR-H-3060NS-SS	$3,495.00	94	80	62	30	13
BCR-H-3060QS-BK	$3,530.00	93	80	62	30	13
BCR-H-3060QS-ORB	$3,530.00	93	80	62	30	13
BCR-H-3060QS-PS	$3,530.00	93	80	62	30	13
BCR-H-3060QS-SB	$3,530.00	93	80	62	30	13
BCR-H-3060QS-SS	$3,495.00	93	80	62	30	13
BCR-H-3060TI-BK	$3,565.00	92	80	62	30	13
BCR-H-3060TI-ORB	$3,565.00	92	80	62	30	13
BCR-H-3060TI-PS	$3,565.00	92	80	62	30	13
BCR-H-3060TI-SB	$3,565.00	92	80	62	30	13

SKU	List Price	Page #	Shipping Dimensions (inches)			
			Lbs	L	W	H
BCR-H-3060TI-SS	$3,530.00	92	80	62	30	13
BCR-H-3060WS-BK	$3,615.00	91	80	62	30	13
BCR-H-3060WS-ORB	$3,615.00	91	80	62	30	13
BCR-H-3060WS-PS	$3,615.00	91	80	62	30	13
BCR-H-3060WS-SB	$3,615.00	91	80	62	30	13
BCR-H-3060WS-SS	$3,580.00	91	80	62	30	13
BFA 22	$100.00	138	3	13	13	7
BFA 42	$100.00	138	4	13	13	7
BFP 22	$100.00	138	3	13	13	7
BFP 42	$100.00	138	4	13	13	7
BFS 22	$195.00	138	5	13	13	7
BFS 42	$195.00	138	6	13	13	7
BGF 5	$20.00	135	1	6	6	2
BLC-3060-SS	$2,895.00	136	80	62	30	13
BLC-3060-BK	$2,895.00	136	80	62	30	13
BLC-3060-ORB	$2,895.00	136	80	62	30	13
BLC-3060-PS	$2,895.00	136	80	62	30	13
BLC-3060-SB	$2,895.00	136	80	62	30	13
BLC-3060AS-BK	$3,835.00	95	80	62	30	13
BLC-3060AS-ORB	$3,835.00	95	80	62	30	13
BLC-3060AS-PS	$3,835.00	95	80	62	30	13
BLC-3060AS-SB	$3,835.00	95	80	62	30	13
BLC-3060AS-SS	$3,695.00	95	80	62	30	13
BLC-3060IG-BK	$3,195.00	97	80	62	30	13
BLC-3060IG-ORB	$3,195.00	97	80	62	30	13
BLC-3060IG-PS	$3,195.00	97	80	62	30	13
BLC-3060IG-SB	$3,195.00	97	80	62	30	13
BLC-3060IG-SS	$3,095.00	97	80	62	30	13
BLC-3060TI-BK	$3,315.00	96	80	62	30	13
BLC-3060TI-ORB	$3,315.00	96	80	62	30	13
BLC-3060TI-PS	$3,315.00	96	80	62	30	13
BLC-3060TI-SB	$3,315.00	96	80	62	30	13
BLC-3060TI-SS	$3,295.00	96	80	62	30	13
BLC-H-3060-SS	$2,895.00	136	80	62	30	13
BLC-H-3060-PS	$2,895.00	136	80	62	30	13
BLC-H-3060-ORB	$2,895.00	136	80	62	30	13
BLC-H-3060-SB	$2,895.00	136	80	62	30	13
BLC-H-3060-BK	$2,895.00	136	80	62	30	13
BLC-H-3060AS-BK	$3,835.00	95	80	62	30	13
BLC-H-3060AS-ORB	$3,835.00	95	80	62	30	13
BLC-H-3060AS-PS	$3,835.00	95	80	62	30	13
BLC-H-3060AS-SB	$3,835.00	95	80	62	30	13
BLC-H-3060AS-SS	$3,695.00	95	80	62	30	13
BLC-H-3060IG-BK	$3,195.00	97	80	62	30	13

Price Sheet & Index

SKU	List Price	Page #	Shipping Dimensions (inches)			
			Lbs	L	W	H
BLC-H-3060IG-ORB	$3,195.00	97	80	62	30	13
BLC-H-3060IG-PS	$3,195.00	97	80	62	30	13
BLC-H-3060IG-SB	$3,195.00	97	80	62	30	13
BLC-H-3060IG-SS	$3,095.00	97	80	62	30	13
BLC-H-3060TI-BK	$3,315.00	96	80	62	30	13
BLC-H-3060TI-ORB	$3,315.00	96	80	62	30	13
BLC-H-3060TI-PS	$3,315.00	96	80	62	30	13
BLC-H-3060TI-SB	$3,315.00	96	80	62	30	13
BLC-H-3060TI-SS	$3,295.00	96	80	62	30	13
BLL-3060-SS	$2,895.00	136	80	62	30	13
BLL-3060-PS	$2,895.00	136	80	62	30	13
BLL-3060-ORB	$2,895.00	136	80	62	30	13
BLL-3060-SB	$2,895.00	136	80	62	30	13
BLL-3060-BK	$2,895.00	136	80	62	30	13
BLL-3060AS-BK	$3,835.00	95	80	62	30	13
BLL-3060AS-ORB	$3,835.00	95	80	62	30	13
BLL-3060AS-PS	$3,835.00	95	80	62	30	13
BLL-3060AS-SB	$3,835.00	95	80	62	30	13
BLL-3060AS-SS	$3,695.00	95	80	62	30	13
BLL-3060IG-BK	$3,195.00	97	80	62	30	13
BLL-3060IG-ORB	$3,195.00	97	80	62	30	13
BLL-3060IG-PS	$3,195.00	97	80	62	30	13
BLL-3060IG-SB	$3,195.00	97	80	62	30	13
BLL-3060IG-SS	$3,095.00	97	80	62	30	13
BLL-3060TI-BK	$3,315.00	96	80	62	30	13
BLL-3060TI-ORB	$3,315.00	96	80	62	30	13
BLL-3060TI-PS	$3,315.00	96	80	62	30	13
BLL-3060TI-SB	$3,315.00	96	80	62	30	13
BLL-3060TI-SS	$3,295.00	96	80	62	30	13
BLL-H-3060-SS	$2,895.00	136	80	62	30	13
BLL-H-3060-PS	$2,895.00	136	80	62	30	13
BLL-H-3060-ORB	$2,895.00	136	80	62	30	13
BLL-H-3060-SB	$2,895.00	136	80	62	30	13
BLL-H-3060-BK	$2,895.00	136	80	62	30	13
BLL-H-3060AS-BK	$3,835.00	95	80	62	30	13
BLL-H-3060AS-ORB	$3,835.00	95	80	62	30	13
BLL-H-3060AS-PS	$3,835.00	95	80	62	30	13
BLL-H-3060AS-SB	$3,835.00	95	80	62	30	13
BLL-H-3060AS-SS	$3,695.00	95	80	62	30	13
BLL-H-3060IG-BK	$3,195.00	97	80	62	30	13
BLL-H-3060IG-ORB	$3,195.00	97	80	62	30	13
BLL-H-3060IG-PS	$3,195.00	97	80	62	30	13
BLL-H-3060IG-SB	$3,195.00	97	80	62	30	13
BLL-H-3060IG-SS	$3,095.00	97	80	62	30	13

SKU	List Price	Page #	Shipping Dimensions (inches)			
			Lbs	L	W	H
BLL-H-3060TI-BK	$3,315.00	96	80	62	30	13
BLL-H-3060TI-ORB	$3,315.00	96	80	62	30	13
BLL-H-3060TI-PS	$3,315.00	96	80	62	30	13
BLL-H-3060TI-SB	$3,315.00	96	80	62	30	13
BLL-H-3060TI-SS	$3,295.00	96	80	62	30	13
BLR-3060-SS	$2,895.00	136	80	62	30	13
BLR-3060-PS	$2,895.00	136	80	62	30	13
BLR-3060-ORB	$2,895.00	136	80	62	30	13
BLR-3060-SB	$2,895.00	136	80	62	30	13
BLR-3060-BK	$2,895.00	136	80	62	30	13
BLR-3060AS-BK	$3,835.00	95	80	62	30	13
BLR-3060AS-ORB	$3,835.00	95	80	62	30	13
BLR-3060AS-PS	$3,835.00	95	80	62	30	13
BLR-3060AS-SB	$3,835.00	95	80	62	30	13
BLR-3060AS-SS	$3,695.00	95	80	62	30	13
BLR-3060IG-BK	$3,195.00	97	80	62	30	13
BLR-3060IG-ORB	$3,195.00	97	80	62	30	13
BLR-3060IG-PS	$3,195.00	97	80	62	30	13
BLR-3060IG-SB	$3,195.00	97	80	62	30	13
BLR-3060IG-SS	$3,095.00	97	80	62	30	13
BLR-3060TI-BK	$3,315.00	96	80	62	30	13
BLR-3060TI-ORB	$3,315.00	96	80	62	30	13
BLR-3060TI-PS	$3,315.00	96	80	62	30	13
BLR-3060TI-SB	$3,315.00	96	80	62	30	13
BLR-3060TI-SS	$3,295.00	96	80	62	30	13
BLR-H-3060-SS	$2,895.00	136	80	62	30	13
BLR-H-3060-PS	$2,895.00	136	80	62	30	13
BLR-H-3060-ORB	$2,895.00	136	80	62	30	13
BLR-H-3060-SB	$2,895.00	136	80	62	30	13
BLR-H-3060-BK	$2,895.00	136	80	62	30	13
BLR-H-3060AS-BK	$3,835.00	95	80	62	30	13
BLR-H-3060AS-ORB	$3,835.00	95	80	62	30	13
BLR-H-3060AS-PS	$3,835.00	95	80	62	30	13
BLR-H-3060AS-SB	$3,835.00	95	80	62	30	13
BLR-H-3060AS-SS	$3,695.00	95	80	62	30	13
BLR-H-3060IG-BK	$3,195.00	97	80	62	30	13
BLR-H-3060IG-ORB	$3,195.00	97	80	62	30	13
BLR-H-3060IG-PS	$3,195.00	97	80	62	30	13
BLR-H-3060IG-SB	$3,195.00	97	80	62	30	13
BLR-H-3060IG-SS	$3,095.00	97	80	62	30	13
BLR-H-3060TI-BK	$3,315.00	96	80	62	30	13
BLR-H-3060TI-ORB	$3,315.00	96	80	62	30	13
BLR-H-3060TI-PS	$3,315.00	96	80	62	30	13
BLR-H-3060TI-SB	$3,315.00	96	80	62	30	13

Price Sheet & Index

SKU	List Price	Page #	Shipping Dimensions (inches)			
			Lbs	L	W	H
BLR-H-3060TI-SS	$3,295.00	96	80	62	30	13
BTI 5 BK	$205.00	135	1	6	6	2
BTI 5 ORB	$205.00	135	1	6	6	2
BTI 5 PS	$205.00	135	1	6	6	2
BTI 5 SB	$205.00	135	1	6	6	2
BTI 5 SS	$170.00	135	1	6	6	2
CBST 6524	$440.00	126	4	30	7	7
CBST 6532	$535.00	126	5	37	7	7
CBST 6536	$590.00	126	6	41	7	7
CBST 6542	$635.00	126	7	47	7	7
CBST 6548	$695.00	126	8	53	7	7
CBST 6560	$795.00	126	9	65	7	7
CCH 24 PS	$60.00	133	2	30	7	7
CCH 24 SS	$55.00	133	2	30	7	7
CCH 30 PS	$65.00	133	2.5	37	7	7
CCH 30 SS	$60.00	133	2.5	37	7	7
CCH 32 PS	$65.00	133	3	37	7	7
CCH 32 SS	$60.00	133	3	37	7	7
CCH 36 PS	$65.00	133	3.5	41	7	7
CCH 36 SS	$60.00	133	3.5	41	7	7
CCH 42 PS	$75.00	133	4	47	7	7
CCH 42 SS	$70.00	133	4	47	7	7
CCH 48 PS	$80.00	133	4.5	53	7	7
CCH 48 SS	$75.00	133	4.5	53	7	7
CCH 54 PS	$80.00	133	5	65	7	7
CCH 54 SS	$75.00	133	5	65	7	7
CCH 60 PS	$80.00	133	5.5	65	7	7
CCH 60 SS	$75.00	133	5.5	65	7	7
CCL 24 PS	$60.00	133	2	30	7	7
CCL 24 SS	$55.00	133	2	30	7	7
CCL 30 PS	$65.00	133	2.5	37	7	7
CCL 30 SS	$60.00	133	2.5	37	7	7
CCL 32 PS	$65.00	133	3	37	7	7
CCL 32 SS	$60.00	133	3	37	7	7
CCL 36 PS	$65.00	133	3.5	41	7	7
CCL 36 SS	$60.00	133	3.5	41	7	7
CCL 42 PS	$75.00	133	4	47	7	7
CCL 42 SS	$70.00	133	4	47	7	7
CCL 48 PS	$80.00	133	4.5	53	7	7
CCL 48 SS	$75.00	133	4.5	53	7	7
CCL 54 PS	$80.00	133	5	65	7	7
CCL 54 SS	$75.00	133	5	65	7	7
CCL 60 PS	$80.00	133	5.5	65	7	7
CCL 60 SS	$75.00	133	5.5	65	7	7

SKU	List Price	Page #	Shipping Dimensions (inches)			
			Lbs	L	W	H
CDA 22	$50.00	137	1	5	5	5
CDA 42	$125.00	137	4	9	9	6
CDA 43	$110.00	137	4	9	9	6
CDA 43 W	$110.00	137	4	9	9	6
CDAB 22	$50.00		4	9	9	6
CDI 22	$65.00	137	3	5	5	5
CDI 42	$100.00	137	7	9	9	7
CDI 43	$110.00	137	8	9	9	7
CDI 43 W	$110.00	137	9	9	9	7
CDI 44	$110.00	138	9	9	9	7
CDI M22	$110.00		3	5	5	5
CDI MT22	$110.00		3	5	5	5
CDIB 22	$65.00	138	4	7	7	4
CDIC 22	$65.00	138	4	7	7	4
CDIC 42	$100.00	138	8	9	9	7
CDIC 43	$110.00	138	9	9	9	7
CDIH 22	$65.00	137	4	7	7	4
CDIQ 42	$200.00	138	8	9	9	7
CDIS 22	$110.00	138	10	9	9	7
CDIS 42	$275.00	138	12	9	9	7
CDIT 22	$65.00	137	4	5	5	5
CDIT 42	$100.00	137	6	9	9	7
CDIT 43	$110.00	137	8	9	9	7
CDP 22	$50.00	137	3	5	5	5
CDP 42	$125.00	137	4	9	9	6
CDP 42 W	$125.00	137	4	9	9	6
CDP 43	$110.00	137	4	9	9	6
CDP 43 W	$110.00	137	4	9	9	6
CDPB 22	$50.00		3	7	7	4
CF 65	$35.00	123	1	4	4	4
CI 2532	$50.00	124	4	37	7	7
CI 2536	$75.00	124	4	41	7	7
CI 2542	$110.00	124	4	47	7	7
CI 2548	$145.00	124	5	53	7	7
CI 2560	$155.00	124	5	65	7	7
CS 38108	$15.00	118	1	110	7	7
CS 3836	$10.00	118	1	41	7	7
CS 3848	$10.00	118	1	53	7	7
CS 3860	$15.00	118	1	65	7	7
CS 3872	$20.00	118	1	78	7	7
CS 3896	$25.00	118	1	102	7	7
CS 65108	$35.00	118	1	110	7	7
CS 6536	$10.00	118	1	41	7	7
CS 6540	$10.00	118	1	41	7	7

Price Sheet & Index

SKU	List Price	Page #	Shipping Dimensions (inches)			
			Lbs	L	W	H
CS 6548	$15.00	118	1	53	7	7
CS 6560	$15.00	118	1	65	7	7
CS 6572	$20.00	118	1	78	7	7
CS 6580	$25.00	118	1	102	7	7
CS 6596	$30.00	118	1	102	7	7
CSST 6524	$485.00	126	4	30	7	7
CSST 6532	$590.00	126	5	37	7	7
CSST 6536	$665.00	126	6	41	7	7
CSST 6542	$750.00	126	7	47	7	7
CSST 6548	$845.00	126	8	53	7	7
CSST 6560	$955.00	126	9	65	7	7
CST 6524	$395.00	126	4	30	7	7
CST 6532	$490.00	126	5	37	7	7
CST 6536	$545.00	126	6	41	7	7
CST 6542	$590.00	126	7	47	7	7
CST 6548	$650.00	126	8	53	7	7
CST 6560	$750.00	126	9	65	7	7
CT 36 BK	$10.00	122	3	41	7	7
CT 36 ORB	$10.00	122	3	41	7	7
CT 36 PS	$10.00	122	3	41	7	7
CT 36 SB	$10.00	122	3	41	7	7
CT 36 SS	$10.00	122	3	41	7	7
CT 40 BK	$15.00	122	2	47	7	7
CT 40 ORB	$15.00	122	2	47	7	7
CT 40 PS	$15.00	122	2	47	7	7
CT 40 SB	$15.00	122	2	47	7	7
CT 40 SS	$10.00	122	2	47	7	7
CT 48 BK	$15.00	122	3	53	7	7
CT 48 ORB	$15.00	122	3	53	7	7
CT 48 PS	$15.00	122	3	53	7	7
CT 48 SB	$15.00	122	3	53	7	7
CT 48 SS	$10.00	122	3	53	7	7
CT 60 BK	$20.00	122	3	65	7	7
CT 60 ORB	$20.00	122	3	65	7	7
CT 60 PS	$20.00	122	3	65	7	7
CT 60 SB	$20.00	122	3	65	7	7
CT 60 SS	$15.00	122	3	65	7	7
CT 72 BK	$25.00	122	5	78	7	7
CT 72 ORB	$25.00	122	5	78	7	7
CT 72 PS	$25.00	122	5	78	7	7
CT 72 SB	$25.00	122	5	78	7	7
CT 72 SS	$20.00	122	5	78	7	7
CT 80 BK	$30.00	122	5	86	7	7
CT 80 ORB	$30.00	122	5	86	7	7

SKU	List Price	Page #	Shipping Dimensions (inches)			
			Lbs	L	W	H
CT 80 PS	$30.00	122	5	86	7	7
CT 80 SB	$30.00	122	5	86	7	7
CT 80 SS	$25.00	122	5	86	7	7
CT 96 BK	$35.00	122	5	102	7	7
CT 96 ORB	$35.00	122	5	102	7	7
CT 96 PS	$35.00	122	5	102	7	7
CT 96 SB	$35.00	122	5	102	7	7
CT 96 SS	$30.00	122	5	102	7	7
D 3848 BK	$410.00	113	6	53	7	7
D 3848 ORB	$410.00	113	6	53	7	7
D 3848 PS	$410.00	113	6	53	7	7
D 3848 SB	$410.00	113	6	53	7	7
D 3848 SS	$255.00	113	6	53	7	7
D 3860 BK	$500.00	113	7	65	7	7
D 3860 ORB	$500.00	113	7	65	7	7
D 3860 PS	$500.00	113	7	65	7	7
D 3860 SB	$500.00	113	7	65	7	7
D 3860 SS	$355.00	113	7	65	7	7
D 3896 BK	$750.00	113	8	102	7	7
D 3896 ORB	$750.00	113	8	102	7	7
D 3896 PS	$750.00	113	8	102	7	7
D 3896 SB	$750.00	113	8	102	7	7
D 3896 SS	$460.00	113	8	102	7	7
D 6548 BK	$415.00	115	6	53	7	7
D 6548 ORB	$415.00	115	6	53	7	7
D 6548 PS	$415.00	115	6	53	7	7
D 6548 SB	$415.00	115	6	53	7	7
D 6548 SS	$285.00	115	6	53	7	7
D 6560 BK	$570.00	115	7	65	7	7
D 6560 ORB	$570.00	115	7	65	7	7
D 6560 PS	$570.00	115	7	65	7	7
D 6560 SB	$570.00	115	7	65	7	7
D 6560 SS	$395.00	115	7	65	7	7
D 6596 BK	$750.00	115	9	102	7	7
D 6596 ORB	$750.00	115	9	102	7	7
D 6596 PS	$750.00	115	9	102	7	7
D 6596 SB	$750.00	115	9	102	7	7
D 6596 SS	$525.00	115	9	102	7	7
DA 6536 BK	$275.00	119	5	41	7	7
DA 6536 ORB	$275.00	119	5	41	7	7
DA 6536 PS	$275.00	119	5	41	7	7
DA 6536 SB	$275.00	119	5	41	7	7
DA 6536 SS	$175.00	119	5	41	7	7
DA 6548 BK	$285.00	119	6	53	7	7

Price Sheet & Index

SKU	List Price	Page #	Shipping Dimensions (inches)			
			Lbs	L	W	H
DA 6548 ORB	$285.00	119	6	53	7	7
DA 6548 PS	$285.00	119	6	53	7	7
DA 6548 SB	$285.00	119	6	53	7	7
DA 6548 SS	$245.00	119	6	53	7	7
DA 6560 BK	$295.00	119	7	65	7	7
DA 6560 ORB	$295.00	119	7	65	7	7
DA 6560 PS	$295.00	119	7	65	7	7
DA 6560 SB	$295.00	119	7	65	7	7
DA 6560 SS	$275.00	119	7	65	7	7
DA 6572 BK	$500.00	119	7	78	7	7
DA 6572 ORB	$500.00	119	7	78	7	7
DA 6572 PS	$500.00	119	7	78	7	7
DA 6572 SB	$500.00	119	7	78	7	7
DA 6572 SS	$395.00	119	7	78	7	7
DA 6596 BK	$520.00	119	8	102	7	7
DA 6596 ORB	$520.00	119	8	102	7	7
DA 6596 PS	$520.00	119	8	102	7	7
DA 6596 SB	$520.00	119	8	102	7	7
DA 6596 SS	$415.00	119	8	102	7	7
DKEY	$5.00	140	1	4	4	4
E 100	$5.00	117	1	4	4	4
E 38	$5.00	113	1	4	4	4
E 65	$5.00	115	1	4	4	4
EA 6524 BK	$160.00	124	4	30	7	7
EA 6524 ORB	$160.00	124	4	30	7	7
EA 6524 PS	$160.00	124	4	30	7	7
EA 6524 SB	$160.00	124	4	30	7	7
EA 6524 SS	$95.00	124	4	30	7	7
EA 6532 BK	$195.00	124	5	41	7	7
EA 6532 ORB	$195.00	124	5	41	7	7
EA 6532 PS	$195.00	124	5	41	7	7
EA 6532 SB	$195.00	124	5	41	7	7
EA 6532 SS	$160.00	124	5	41	7	7
EA 6536 BK	$240.00	124	5	41	7	7
EA 6536 ORB	$240.00	124	5	41	7	7
EA 6536 PS	$240.00	124	5	41	7	7
EA 6536 SB	$240.00	124	5	41	7	7
EA 6536 SS	$170.00	124	5	41	7	7
EA 6542 BK	$295.00	124	6	47	7	7
EA 6542 ORB	$295.00	124	6	47	7	7
EA 6542 PS	$295.00	124	6	47	7	7
EA 6542 SB	$295.00	124	6	47	7	7
EA 6542 SS	$220.00	124	6	47	7	7
EA 6548 BK	$340.00	124	6	53	7	7

SKU	List Price	Page #	Shipping Dimensions (inches)			
			Lbs	L	W	H
EA 6548 ORB	$340.00	124	6	53	7	7
EA 6548 PS	$340.00	124	6	53	7	7
EA 6548 SB	$340.00	124	6	53	7	7
EA 6548 SS	$260.00	124	6	53	7	7
EA 6560 BK	$420.00	124	7	65	7	7
EA 6560 ORB	$420.00	124	7	65	7	7
EA 6560 PS	$420.00	124	7	65	7	7
EA 6560 SB	$420.00	124	7	65	7	7
EA 6560 SS	$320.00	124	7	65	7	7
EL 38	$5.00	114	1	4	4	4
EL 65	$5.00	116	1	4	4	4
ER 65 BK	$25.00	116	1	4	4	4
ER 65 ORB	$25.00	116	1	4	4	4
ER 65 PS	$25.00	116	1	4	4	4
ER 65 SB	$25.00	116	1	4	4	4
ER 65 SS	$25.00	116	1	4	4	4
F 100	$10.00	117	1	4	4	4
F 65	$10.00	113	1	4	4	4
FC 12532 SS	$425.00	127	7	37	7	7
FC 12536 SS	$455.00	127	8	41	7	7
FC 12542 SS	$490.00	127	9	47	7	7
FC 12548 SS	$540.00	127	10	53	7	7
FC 12560 SS	$580.00	127	11	65	7	7
FC 6524 SS	$285.00	123	4	30	7	7
FC 6532 SS	$375.00	123	5	37	7	7
FC 6536 SS	$405.00	123	6	41	7	7
FC 6542 SS	$415.00	123	7	47	7	7
FC 6548 SS	$430.00	123	8	53	7	7
FC 6560 SS	$450.00	123	9	65	7	7
FCB 6524 SS	$330.00	123	4	30	7	7
FCB 6532 SS	$420.00	123	6	37	7	7
FCB 6536 SS	$450.00	123	6	41	7	7
FCB 6542 SS	$460.00	123	7	47	7	7
FCB 6548 SS	$475.00	123	7	53	7	7
FCB 6560 SS	$565.00	123	8	65	7	7
FCBAS 2532 BK	$1,085.00	53	9	37	7	7
FCBAS 2532 ORB	$1,085.00	53	9	37	7	7
FCBAS 2532 PS	$1,085.00	53	9	37	7	7
FCBAS 2532 SB	$1,085.00	53	9	37	7	7
FCBAS 2532 SS	$940.00	53	9	37	7	7
FCBAS 2536 BK	$1,170.00	53	10	41	7	7
FCBAS 2536 ORB	$1,170.00	53	10	41	7	7
FCBAS 2536 PS	$1,170.00	53	10	41	7	7
FCBAS 2536 SB	$1,170.00	53	10	41	7	7

Price Sheet & Index

SKU	List Price	Page #	Shipping Dimensions (inches)			
			Lbs	L	W	H
FCBAS 2536 SS	$1,040.00	53	10	41	7	7
FCBAS 2542 BK	$1,340.00	53	12	47	7	7
FCBAS 2542 ORB	$1,340.00	53	12	47	7	7
FCBAS 2542 PS	$1,340.00	53	12	47	7	7
FCBAS 2542 SB	$1,340.00	53	12	47	7	7
FCBAS 2542 SS	$1,240.00	53	12	47	7	7
FCBAS 2548 BK	$1,390.00	53	13	53	7	7
FCBAS 2548 ORB	$1,390.00	53	13	53	7	7
FCBAS 2548 PS	$1,390.00	53	13	53	7	7
FCBAS 2548 SB	$1,390.00	53	13	53	7	7
FCBAS 2548 SS	$1,290.00	53	13	53	7	7
FCBAS 2560 BK	$1,590.00	53	16	65	7	7
FCBAS 2560 ORB	$1,590.00	53	16	65	7	7
FCBAS 2560 PS	$1,590.00	53	16	65	7	7
FCBAS 2560 SB	$1,590.00	53	16	65	7	7
FCBAS 2560 SS	$1,440.00	53	16	65	7	7
FCBAS 6524 BK	$885.00	52	7	30	7	7
FCBAS 6524 ORB	$885.00	52	7	30	7	7
FCBAS 6524 PS	$885.00	52	7	30	7	7
FCBAS 6524 SB	$885.00	52	7	30	7	7
FCBAS 6524 SS	$730.00	52	7	30	7	7
FCBAS 6532 BK	$1,165.00	52	8	37	7	7
FCBAS 6532 ORB	$1,165.00	52	8	37	7	7
FCBAS 6532 PS	$1,165.00	52	8	37	7	7
FCBAS 6532 SB	$1,165.00	52	8	37	7	7
FCBAS 6532 SS	$1,005.00	52	8	37	7	7
FCBAS 6536 BK	$1,205.00	52	9	41	7	7
FCBAS 6536 ORB	$1,205.00	52	9	41	7	7
FCBAS 6536 PS	$1,205.00	52	9	41	7	7
FCBAS 6536 SB	$1,205.00	52	9	41	7	7
FCBAS 6536 SS	$1,045.00	52	9	41	7	7
FCBAS 6542 BK	$1,310.00	52	11	47	7	7
FCBAS 6542 ORB	$1,310.00	52	11	47	7	7
FCBAS 6542 PS	$1,310.00	52	11	47	7	7
FCBAS 6542 SB	$1,310.00	52	11	47	7	7
FCBAS 6542 SS	$1,155.00	52	11	47	7	7
FCBAS 6548 BK	$1,405.00	52	13	53	7	7
FCBAS 6548 ORB	$1,405.00	52	13	53	7	7
FCBAS 6548 PS	$1,405.00	52	13	53	7	7
FCBAS 6548 SB	$1,405.00	52	13	53	7	7
FCBAS 6548 SS	$1,245.00	52	13	53	7	7
FCBAS 6560 BK	$1,620.00	52	15	65	7	7
FCBAS 6560 ORB	$1,620.00	52	15	65	7	7
FCBAS 6560 PS	$1,620.00	52	15	65	7	7

SKU	List Price	Page #	Shipping Dimensions (inches)			
			Lbs	L	W	H
FCBAS 6560 SB	$1,620.00	52	15	65	7	7
FCBAS 6560 SS	$1,470.00	52	15	65	7	7
FCBED 6524 BK	$500.00	49	6	30	7	7
FCBED 6524 ORB	$500.00	49	6	30	7	7
FCBED 6524 PS	$500.00	49	6	30	7	7
FCBED 6524 SB	$500.00	49	6	30	7	7
FCBED 6524 SS	$435.00	49	6	30	7	7
FCBED 6532 BK	$625.00	49	8	37	7	7
FCBED 6532 ORB	$625.00	49	8	37	7	7
FCBED 6532 PS	$625.00	49	8	37	7	7
FCBED 6532 SB	$625.00	49	8	37	7	7
FCBED 6532 SS	$590.00	49	8	37	7	7
FCBED 6536 BK	$700.00	49	9	41	7	7
FCBED 6536 ORB	$700.00	49	9	41	7	7
FCBED 6536 PS	$700.00	49	9	41	7	7
FCBED 6536 SB	$700.00	49	9	41	7	7
FCBED 6536 SS	$630.00	49	9	41	7	7
FCBED 6542 BK	$765.00	49	10	47	7	7
FCBED 6542 ORB	$765.00	49	10	47	7	7
FCBED 6542 PS	$765.00	49	10	47	7	7
FCBED 6542 SB	$765.00	49	10	47	7	7
FCBED 6542 SS	$690.00	49	10	47	7	7
FCBED 6548 BK	$825.00	49	11	53	7	7
FCBED 6548 ORB	$825.00	49	11	53	7	7
FCBED 6548 PS	$825.00	49	11	53	7	7
FCBED 6548 SB	$825.00	49	11	53	7	7
FCBED 6548 SS	$745.00	49	11	53	7	7
FCBED 6560 BK	$995.00	49	13	65	7	7
FCBED 6560 ORB	$995.00	49	13	65	7	7
FCBED 6560 PS	$995.00	49	13	65	7	7
FCBED 6560 SB	$995.00	49	13	65	7	7
FCBED 6560 SS	$895.00	49	13	65	7	7
FCBIG 6524 BK	$500.00	50	6	30	7	7
FCBIG 6524 ORB	$500.00	50	6	30	7	7
FCBIG 6524 PS	$500.00	50	6	30	7	7
FCBIG 6524 SB	$500.00	50	6	30	7	7
FCBIG 6524 SS	$435.00	50	6	30	7	7
FCBIG 6532 BK	$625.00	50	8	37	7	7
FCBIG 6532 ORB	$625.00	50	8	37	7	7
FCBIG 6532 PS	$625.00	50	8	37	7	7
FCBIG 6532 SB	$625.00	50	8	37	7	7
FCBIG 6532 SS	$590.00	50	8	37	7	7
FCBIG 6536 BK	$700.00	50	9	41	7	7
FCBIG 6536 ORB	$700.00	50	9	41	7	7

Price Sheet & Index

SKU	List Price	Page #	Shipping Dimensions (inches)			
			Lbs	L	W	H
FCBIG 6536 PS	$700.00	50	9	41	7	7
FCBIG 6536 SB	$700.00	50	9	41	7	7
FCBIG 6536 SS	$630.00	50	9	41	7	7
FCBIG 6542 BK	$765.00	50	10	47	7	7
FCBIG 6542 ORB	$765.00	50	10	47	7	7
FCBIG 6542 PS	$765.00	50	10	47	7	7
FCBIG 6542 SB	$765.00	50	10	47	7	7
FCBIG 6542 SS	$690.00	50	10	47	7	7
FCBIG 6548 BK	$825.00	50	11	53	7	7
FCBIG 6548 ORB	$825.00	50	11	53	7	7
FCBIG 6548 PS	$825.00	50	11	53	7	7
FCBIG 6548 SB	$825.00	50	11	53	7	7
FCBIG 6548 SS	$745.00	50	11	53	7	7
FCBIG 6560 BK	$995.00	50	13	65	7	7
FCBIG 6560 ORB	$995.00	50	13	65	7	7
FCBIG 6560 PS	$995.00	50	13	65	7	7
FCBIG 6560 SB	$995.00	50	13	65	7	7
FCBIG 6560 SS	$895.00	50	13	65	7	7
FCBMN 6532 BK	$865.00	49	8	37	7	7
FCBMN 6532 ORB	$865.00	49	8	37	7	7
FCBMN 6532 PS	$865.00	49	8	37	7	7
FCBMN 6532 SB	$865.00	49	8	37	7	7
FCBMN 6532 SS	$715.00	49	8	37	7	7
FCBMN 6536 BK	$930.00	49	9	41	7	7
FCBMN 6536 ORB	$930.00	49	9	41	7	7
FCBMN 6536 PS	$930.00	49	9	41	7	7
FCBMN 6536 SB	$930.00	49	9	41	7	7
FCBMN 6536 SS	$780.00	49	9	41	7	7
FCBMN 6542 BK	$995.00	49	10	47	7	7
FCBMN 6542 ORB	$995.00	49	10	47	7	7
FCBMN 6542 PS	$995.00	49	10	47	7	7
FCBMN 6542 SB	$995.00	49	10	47	7	7
FCBMN 6542 SS	$845.00	49	10	47	7	7
FCBMN 6548 BK	$1,090.00	49	11	53	7	7
FCBMN 6548 ORB	$1,090.00	49	11	53	7	7
FCBMN 6548 PS	$1,090.00	49	11	53	7	7
FCBMN 6548 SB	$1,090.00	49	11	53	7	7
FCBMN 6548 SS	$910.00	49	11	53	7	7
FCBMN 6560 BK	$1,330.00	49	13	65	7	7
FCBMN 6560 ORB	$1,330.00	49	13	65	7	7
FCBMN 6560 PS	$1,330.00	49	13	65	7	7
FCBMN 6560 SB	$1,330.00	49	13	65	7	7
FCBMN 6560 SS	$1,180.00	49	13	65	7	7
FCBSG 6524 BK	$980.00	50	8	30	7	7

SKU	List Price	Page #	Shipping Dimensions (inches)			
			Lbs	L	W	H
FCBSG 6524 ORB	$980.00	50	8	30	7	7
FCBSG 6524 PS	$980.00	50	8	30	7	7
FCBSG 6524 SB	$980.00	50	8	30	7	7
FCBSG 6524 SS	$865.00	50	8	30	7	7
FCBSG 6532 BK	$1,095.00	50	10	37	7	7
FCBSG 6532 ORB	$1,095.00	50	10	37	7	7
FCBSG 6532 PS	$1,095.00	50	10	37	7	7
FCBSG 6532 SB	$1,095.00	50	10	37	7	7
FCBSG 6532 SS	$970.00	50	10	37	7	7
FCBSG 6536 BK	$1,150.00	50	11	41	7	7
FCBSG 6536 ORB	$1,150.00	50	11	41	7	7
FCBSG 6536 PS	$1,150.00	50	11	41	7	7
FCBSG 6536 SB	$1,150.00	50	11	41	7	7
FCBSG 6536 SS	$1,015.00	50	11	41	7	7
FCBSG 6542 BK	$1,185.00	50	12	47	7	7
FCBSG 6542 ORB	$1,185.00	50	12	47	7	7
FCBSG 6542 PS	$1,185.00	50	12	47	7	7
FCBSG 6542 SB	$1,185.00	50	12	47	7	7
FCBSG 6542 SS	$1,040.00	50	12	47	7	7
FCBSG 6548 BK	$1,220.00	50	13	53	7	7
FCBSG 6548 ORB	$1,220.00	50	13	53	7	7
FCBSG 6548 PS	$1,220.00	50	13	53	7	7
FCBSG 6548 SB	$1,220.00	50	13	53	7	7
FCBSG 6548 SS	$1,065.00	50	13	53	7	7
FCBSG 6560 BK	$1,465.00	50	15	65	7	7
FCBSG 6560 ORB	$1,465.00	50	15	65	7	7
FCBSG 6560 PS	$1,465.00	50	15	65	7	7
FCBSG 6560 SB	$1,465.00	50	15	65	7	7
FCBSG 6560 SS	$1,315.00	50	15	65	7	7
FCBST 24 BK	$600.00	54	5	30	7	7
FCBST 24 ORB	$600.00	54	5	30	7	7
FCBST 24 PS	$600.00	54	5	30	7	7
FCBST 24 SB	$600.00	54	5	30	7	7
FCBST 24 SS	$570.00	54	5	30	7	7
FCBST 32 BK	$730.00	54	6	37	7	7
FCBST 32 ORB	$730.00	54	6	37	7	7
FCBST 32 PS	$730.00	54	6	37	7	7
FCBST 32 SB	$730.00	54	6	37	7	7
FCBST 32 SS	$695.00	54	6	37	7	7
FCBST 36 BK	$810.00	54	7	41	7	7
FCBST 36 ORB	$810.00	54	7	41	7	7
FCBST 36 PS	$810.00	54	7	41	7	7
FCBST 36 SB	$810.00	54	7	41	7	7
FCBST 36 SS	$760.00	54	7	41	7	7

Price Sheet & Index

SKU	List Price	Page #	Shipping Dimensions (inches)			
			Lbs	L	W	H
FCBST 42 BK	$910.00	54	8	47	7	7
FCBST 42 ORB	$910.00	54	8	47	7	7
FCBST 42 PS	$910.00	54	8	47	7	7
FCBST 42 SB	$910.00	54	8	47	7	7
FCBST 42 SS	$855.00	54	8	47	7	7
FCBST 48 BK	$1,015.00	54	9	53	7	7
FCBST 48 ORB	$1,015.00	54	9	53	7	7
FCBST 48 PS	$1,015.00	54	9	53	7	7
FCBST 48 SB	$1,015.00	54	9	53	7	7
FCBST 48 SS	$955.00	54	9	53	7	7
FCBST 60 BK	$1,190.00	54	10	65	7	7
FCBST 60 ORB	$1,190.00	54	10	65	7	7
FCBST 60 PS	$1,190.00	54	10	65	7	7
FCBST 60 SB	$1,190.00	54	10	65	7	7
FCBST 60 SS	$1,115.00	54	10	65	7	7
FCBTIF 6524 BK	$570.00	51	6	30	7	7
FCBTIF 6524 ORB	$570.00	51	6	30	7	7
FCBTIF 6524 PS	$570.00	51	6	30	7	7
FCBTIF 6524 SB	$570.00	51	6	30	7	7
FCBTIF 6524 SS	$555.00	51	6	30	7	7
FCBTIF 6532 BK	$735.00	51	8	37	7	7
FCBTIF 6532 ORB	$735.00	51	8	37	7	7
FCBTIF 6532 PS	$735.00	51	8	37	7	7
FCBTIF 6532 SB	$735.00	51	8	37	7	7
FCBTIF 6532 SS	$720.00	51	8	37	7	7
FCBTIF 6536 BK	$825.00	51	8	41	7	7
FCBTIF 6536 ORB	$825.00	51	8	41	7	7
FCBTIF 6536 PS	$825.00	51	8	41	7	7
FCBTIF 6536 SB	$825.00	51	8	41	7	7
FCBTIF 6536 SS	$805.00	51	8	41	7	7
FCBTIF 6542 BK	$865.00	51	9	47	7	7
FCBTIF 6542 ORB	$865.00	51	9	47	7	7
FCBTIF 6542 PS	$865.00	51	9	47	7	7
FCBTIF 6542 SB	$865.00	51	9	47	7	7
FCBTIF 6542 SS	$845.00	51	9	47	7	7
FCBTIF 6548 BK	$960.00	51	10	53	7	7
FCBTIF 6548 ORB	$960.00	51	10	53	7	7
FCBTIF 6548 PS	$960.00	51	10	53	7	7
FCBTIF 6548 SB	$960.00	51	10	53	7	7
FCBTIF 6548 SS	$940.00	51	10	53	7	7
FCBTIF 6560 BK	$1,170.00	51	11	65	7	7
FCBTIF 6560 ORB	$1,170.00	51	11	65	7	7
FCBTIF 6560 PS	$1,170.00	51	11	65	7	7
FCBTIF 6560 SB	$1,170.00	51	11	65	7	7

SKU	List Price	Page #	Shipping Dimensions (inches)			
			Lbs	L	W	H
FCBTIF 6560 SS	$1,145.00	51	11	65	7	7
FCH 6524 SS	$340.00	123	4	30	7	7
FCH 6532 SS	$430.00	123	6	37	7	7
FCH 6536 SS	$460.00	123	6	41	7	7
FCH 6542 SS	$470.00	123	7	47	7	7
FCH 6548 SS	$485.00	123	7	53	7	7
FCH 6560 SS	$575.00	123	8	65	7	7
FCS 12532 SS	$655.00	123	7	37	7	7
FCS 12536 SS	$710.00	123	8	41	7	7
FCS 12542 SS	$775.00	123	9	47	7	7
FCS 12548 SS	$855.00	123	10	53	7	7
FCS 12560 SS	$950.00	123	11	65	7	7
FCS 6524	$375.00	123	4	30	7	7
FCS 6532	$475.00	123	6	37	7	7
FCS 6536	$525.00	123	6	41	7	7
FCS 6542	$575.00	123	7	47	7	7
FCS 6548	$625.00	123	7	53	7	7
FCS 6560	$725.00	123	8	65	7	7
FCSAS 12532 SS	$1,460.00	47	14	37	7	7
FCSAS 12532 PS	$1,760.00	47	14	37	7	7
FCSAS 12532 ORB	$1,760.00	47	14	37	7	7
FCSAS 12532 SB	$1,760.00	47	14	37	7	7
FCSAS 12532 BK	$1,760.00	47	14	37	7	7
FCSAS 12536 SS	$1,615.00	47	15	41	7	7
FCSAS 12536 PS	$1,915.00	47	15	41	7	7
FCSAS 12536 ORB	$1,915.00	47	15	41	7	7
FCSAS 12536 SB	$1,915.00	47	15	41	7	7
FCSAS 12536 BK	$1,915.00	47	15	41	7	7
FCSAS 12542 SS	$1,730.00	47	18	47	7	7
FCSAS 12542 PS	$2,030.00	47	18	47	7	7
FCSAS 12542 ORB	$2,030.00	47	18	47	7	7
FCSAS 12542 SB	$2,030.00	47	18	47	7	7
FCSAS 12542 BK	$2,030.00	47	18	47	7	7
FCSAS 12548 SS	$1,860.00	47	19	53	7	7
FCSAS 12548 PS	$2,160.00	47	19	53	7	7
FCSAS 12548 ORB	$2,160.00	47	19	53	7	7
FCSAS 12548 SB	$2,160.00	47	19	53	7	7
FCSAS 12548 BK	$2,160.00	47	19	53	7	7
FCSAS 12560 SS	$2,155.00	47	23	65	7	7
FCSAS 12560 PS	$2,455.00	47	23	65	7	7
FCSAS 12560 ORB	$2,455.00	47	23	65	7	7
FCSAS 12560 SB	$2,455.00	47	23	65	7	7
FCSAS 12560 BK	$2,455.00	47	23	65	7	7
FCSAS 2532 BK	$1,145.00	47	9	37	7	7

Price Sheet & Index

SKU	List Price	Page #	Shipping Dimensions (inches)			
			Lbs	L	W	H
FCSAS 2532 ORB	$1,145.00	47	9	37	7	7
FCSAS 2532 PS	$1,145.00	47	9	37	7	7
FCSAS 2532 SB	$1,145.00	47	9	37	7	7
FCSAS 2532 SS	$1,015.00	47	9	37	7	7
FCSAS 2536 BK	$1,240.00	47	10	41	7	7
FCSAS 2536 ORB	$1,240.00	47	10	41	7	7
FCSAS 2536 PS	$1,240.00	47	10	41	7	7
FCSAS 2536 SB	$1,240.00	47	10	41	7	7
FCSAS 2536 SS	$1,110.00	47	10	41	7	7
FCSAS 2542 BK	$1,445.00	47	12	47	7	7
FCSAS 2542 ORB	$1,445.00	47	12	47	7	7
FCSAS 2542 PS	$1,445.00	47	12	47	7	7
FCSAS 2542 SB	$1,445.00	47	12	47	7	7
FCSAS 2542 SS	$1,345.00	47	12	47	7	7
FCSAS 2548 BK	$1,515.00	47	13	53	7	7
FCSAS 2548 ORB	$1,515.00	47	13	53	7	7
FCSAS 2548 PS	$1,515.00	47	13	53	7	7
FCSAS 2548 SB	$1,515.00	47	13	53	7	7
FCSAS 2548 SS	$1,415.00	47	13	53	7	7
FCSAS 2560 BK	$1,740.00	47	16	65	7	7
FCSAS 2560 ORB	$1,740.00	47	16	65	7	7
FCSAS 2560 PS	$1,740.00	47	16	65	7	7
FCSAS 2560 SB	$1,740.00	47	16	65	7	7
FCSAS 2560 SS	$1,590.00	47	16	65	7	7
FCSAS 6524 BK	$930.00	46	7	30	7	7
FCSAS 6524 ORB	$930.00	46	7	30	7	7
FCSAS 6524 PS	$930.00	46	7	30	7	7
FCSAS 6524 SB	$930.00	46	7	30	7	7
FCSAS 6524 SS	$775.00	46	7	30	7	7
FCSAS 6532 BK	$1,220.00	46	8	37	7	7
FCSAS 6532 ORB	$1,220.00	46	8	37	7	7
FCSAS 6532 PS	$1,220.00	46	8	37	7	7
FCSAS 6532 SB	$1,220.00	46	8	37	7	7
FCSAS 6532 SS	$1,060.00	46	8	37	7	7
FCSAS 6536 BK	$1,280.00	46	9	41	7	7
FCSAS 6536 ORB	$1,280.00	46	9	41	7	7
FCSAS 6536 PS	$1,280.00	46	9	41	7	7
FCSAS 6536 SB	$1,280.00	46	9	41	7	7
FCSAS 6536 SS	$1,120.00	46	9	41	7	7
FCSAS 6542 BK	$1,425.00	46	11	47	7	7
FCSAS 6542 ORB	$1,425.00	46	11	47	7	7
FCSAS 6542 PS	$1,425.00	46	11	47	7	7
FCSAS 6542 SB	$1,425.00	46	11	47	7	7
FCSAS 6542 SS	$1,270.00	46	11	47	7	7

SKU	List Price	Page #	Shipping Dimensions (inches)			
			Lbs	L	W	H
FCSAS 6548 BK	$1,555.00	46	13	53	7	7
FCSAS 6548 ORB	$1,555.00	46	13	53	7	7
FCSAS 6548 PS	$1,555.00	46	13	53	7	7
FCSAS 6548 SB	$1,555.00	46	13	53	7	7
FCSAS 6548 SS	$1,395.00	46	13	53	7	7
FCSAS 6560 BK	$1,780.00	46	15	65	7	7
FCSAS 6560 ORB	$1,780.00	46	15	65	7	7
FCSAS 6560 PS	$1,780.00	46	15	65	7	7
FCSAS 6560 SB	$1,780.00	46	15	65	7	7
FCSAS 6560 SS	$1,630.00	46	15	65	7	7
FCSED 6524 BK	$545.00	43	6	30	7	7
FCSED 6524 ORB	$545.00	43	6	30	7	7
FCSED 6524 PS	$545.00	43	6	30	7	7
FCSED 6524 SB	$545.00	43	6	30	7	7
FCSED 6524 SS	$480.00	43	6	30	7	7
FCSED 6532 BK	$680.00	43	8	37	7	7
FCSED 6532 ORB	$680.00	43	8	37	7	7
FCSED 6532 PS	$680.00	43	8	37	7	7
FCSED 6532 SB	$680.00	43	8	37	7	7
FCSED 6532 SS	$645.00	43	8	37	7	7
FCSED 6536 BK	$775.00	43	9	41	7	7
FCSED 6536 ORB	$775.00	43	9	41	7	7
FCSED 6536 PS	$775.00	43	9	41	7	7
FCSED 6536 SB	$775.00	43	9	41	7	7
FCSED 6536 SS	$705.00	43	9	41	7	7
FCSED 6542 BK	$880.00	43	10	47	7	7
FCSED 6542 ORB	$880.00	43	10	47	7	7
FCSED 6542 PS	$880.00	43	10	47	7	7
FCSED 6542 SB	$880.00	43	10	47	7	7
FCSED 6542 SS	$805.00	43	10	47	7	7
FCSED 6548 BK	$975.00	43	11	53	7	7
FCSED 6548 ORB	$975.00	43	11	53	7	7
FCSED 6548 PS	$975.00	43	11	53	7	7
FCSED 6548 SB	$975.00	43	11	53	7	7
FCSED 6548 SS	$895.00	43	11	53	7	7
FCSED 6560 BK	$1,155.00	43	13	65	7	7
FCSED 6560 ORB	$1,155.00	43	13	65	7	7
FCSED 6560 PS	$1,155.00	43	13	65	7	7
FCSED 6560 SB	$1,155.00	43	13	65	7	7
FCSED 6560 SS	$1,055.00	43	13	65	7	7
FCSIG 6524 BK	$545.00	44	6	30	7	7
FCSIG 6524 ORB	$545.00	44	6	30	7	7
FCSIG 6524 PS	$545.00	44	6	30	7	7
FCSIG 6524 SB	$545.00	44	6	30	7	7

Price Sheet & Index

SKU	List Price	Page #	Shipping Dimensions (inches)			
			Lbs	L	W	H
FCSIG 6524 SS	$480.00	44	6	30	7	7
FCSIG 6532 BK	$680.00	44	8	37	7	7
FCSIG 6532 ORB	$680.00	44	8	37	7	7
FCSIG 6532 PS	$680.00	44	8	37	7	7
FCSIG 6532 SB	$680.00	44	8	37	7	7
FCSIG 6532 SS	$645.00	44	8	37	7	7
FCSIG 6536 BK	$775.00	44	9	41	7	7
FCSIG 6536 ORB	$775.00	44	9	41	7	7
FCSIG 6536 PS	$775.00	44	9	41	7	7
FCSIG 6536 SB	$775.00	44	9	41	7	7
FCSIG 6536 SS	$705.00	44	9	41	7	7
FCSIG 6542 BK	$880.00	44	10	47	7	7
FCSIG 6542 ORB	$880.00	44	10	47	7	7
FCSIG 6542 PS	$880.00	44	10	47	7	7
FCSIG 6542 SB	$880.00	44	10	47	7	7
FCSIG 6542 SS	$805.00	44	10	47	7	7
FCSIG 6548 BK	$975.00	44	11	53	7	7
FCSIG 6548 ORB	$975.00	44	11	53	7	7
FCSIG 6548 PS	$975.00	44	11	53	7	7
FCSIG 6548 SB	$975.00	44	11	53	7	7
FCSIG 6548 SS	$895.00	44	11	53	7	7
FCSIG 6560 BK	$1,155.00	44	13	65	7	7
FCSIG 6560 ORB	$1,155.00	44	13	65	7	7
FCSIG 6560 PS	$1,155.00	44	13	65	7	7
FCSIG 6560 SB	$1,155.00	44	13	65	7	7
FCSIG 6560 SS	$1,055.00	44	13	65	7	7
FCSMN 6532 BK	$920.00	43	8	37	7	7
FCSMN 6532 ORB	$920.00	43	8	37	7	7
FCSMN 6532 PS	$920.00	43	8	37	7	7
FCSMN 6532 SB	$920.00	43	8	37	7	7
FCSMN 6532 SS	$770.00	43	8	37	7	7
FCSMN 6536 BK	$1,005.00	43	9	41	7	7
FCSMN 6536 ORB	$1,005.00	43	9	41	7	7
FCSMN 6536 PS	$1,005.00	43	9	41	7	7
FCSMN 6536 SB	$1,005.00	43	9	41	7	7
FCSMN 6536 SS	$855.00	43	9	41	7	7
FCSMN 6542 BK	$1,110.00	43	10	47	7	7
FCSMN 6542 ORB	$1,110.00	43	10	47	7	7
FCSMN 6542 PS	$1,110.00	43	10	47	7	7
FCSMN 6542 SB	$1,110.00	43	10	47	7	7
FCSMN 6542 SS	$960.00	43	10	47	7	7
FCSMN 6548 BK	$1,240.00	43	11	53	7	7
FCSMN 6548 ORB	$1,240.00	43	11	53	7	7
FCSMN 6548 PS	$1,240.00	43	11	53	7	7

SKU	List Price	Page #	Shipping Dimensions (inches)			
			Lbs	L	W	H
FCSMN 6548 SB	$1,240.00	43	11	53	7	7
FCSMN 6548 SS	$1,060.00	43	11	53	7	7
FCSMN 6560 BK	$1,490.00	43	13	65	7	7
FCSMN 6560 ORB	$1,490.00	43	13	65	7	7
FCSMN 6560 PS	$1,490.00	43	13	65	7	7
FCSMN 6560 SB	$1,490.00	43	13	65	7	7
FCSMN 6560 SS	$1,340.00	43	13	65	7	7
FCSSG 6524 BK	$1,025.00	44	8	30	7	7
FCSSG 6524 ORB	$1,025.00	44	8	30	7	7
FCSSG 6524 PS	$1,025.00	44	8	30	7	7
FCSSG 6524 SB	$1,025.00	44	8	30	7	7
FCSSG 6524 SS	$910.00	44	8	30	7	7
FCSSG 6532 BK	$1,150.00	44	10	37	7	7
FCSSG 6532 ORB	$1,150.00	44	10	37	7	7
FCSSG 6532 PS	$1,150.00	44	10	37	7	7
FCSSG 6532 SB	$1,150.00	44	10	37	7	7
FCSSG 6532 SS	$1,025.00	44	10	37	7	7
FCSSG 6536 BK	$1,225.00	44	11	41	7	7
FCSSG 6536 ORB	$1,225.00	44	11	41	7	7
FCSSG 6536 PS	$1,225.00	44	11	41	7	7
FCSSG 6536 SB	$1,225.00	44	11	41	7	7
FCSSG 6536 SS	$1,090.00	44	11	41	7	7
FCSSG 6542 BK	$1,300.00	44	12	47	7	7
FCSSG 6542 ORB	$1,300.00	44	12	47	7	7
FCSSG 6542 PS	$1,300.00	44	12	47	7	7
FCSSG 6542 SB	$1,300.00	44	12	47	7	7
FCSSG 6542 SS	$1,155.00	44	12	47	7	7
FCSSG 6548 BK	$1,370.00	44	13	53	7	7
FCSSG 6548 ORB	$1,370.00	44	13	53	7	7
FCSSG 6548 PS	$1,370.00	44	13	53	7	7
FCSSG 6548 SB	$1,370.00	44	13	53	7	7
FCSSG 6548 SS	$1,215.00	44	13	53	7	7
FCSSG 6560 BK	$1,625.00	44	15	65	7	7
FCSSG 6560 ORB	$1,625.00	44	15	65	7	7
FCSSG 6560 PS	$1,625.00	44	15	65	7	7
FCSSG 6560 SB	$1,625.00	44	15	65	7	7
FCSSG 6560 SS	$1,475.00	44	15	65	7	7
FCSST 6524 BK	$775.00	48	5	30	7	7
FCSST 6524 ORB	$775.00	48	5	30	7	7
FCSST 6524 PS	$775.00	48	5	30	7	7
FCSST 6524 SB	$775.00	48	5	30	7	7
FCSST 6524 SS	$760.00	48	5	30	7	7
FCSST 6532 BK	$965.00	48	6	37	7	7
FCSST 6532 ORB	$965.00	48	6	37	7	7

Price Sheet & Index

SKU	List Price	Page #	Shipping Dimensions (inches)			
			Lbs	L	W	H
FCSST 6532 PS	$965.00	48	6	37	7	7
FCSST 6532 SB	$965.00	48	6	37	7	7
FCSST 6532 SS	$950.00	48	6	37	7	7
FCSST 6536 BK	$1,050.00	48	7	41	7	7
FCSST 6536 ORB	$1,050.00	48	7	41	7	7
FCSST 6536 PS	$1,050.00	48	7	41	7	7
FCSST 6536 SB	$1,050.00	48	7	41	7	7
FCSST 6536 SS	$1,030.00	48	7	41	7	7
FCSST 6542 BK	$1,110.00	48	8	47	7	7
FCSST 6542 ORB	$1,110.00	48	8	47	7	7
FCSST 6542 PS	$1,110.00	48	8	47	7	7
FCSST 6542 SB	$1,110.00	48	8	47	7	7
FCSST 6542 SS	$1,090.00	48	8	47	7	7
FCSST 6548 BK	$1,175.00	48	9	53	7	7
FCSST 6548 ORB	$1,175.00	48	9	53	7	7
FCSST 6548 PS	$1,175.00	48	9	53	7	7
FCSST 6548 SB	$1,175.00	48	9	53	7	7
FCSST 6548 SS	$1,155.00	48	9	53	7	7
FCSST 6560 BK	$1,370.00	48	10	65	7	7
FCSST 6560 ORB	$1,370.00	48	10	65	7	7
FCSST 6560 PS	$1,370.00	48	10	65	7	7
FCSST 6560 SB	$1,370.00	48	10	65	7	7
FCSST 6560 SS	$1,345.00	48	10	65	7	7
FCSTIF 6524 BK	$615.00	45	6	30	7	7
FCSTIF 6524 ORB	$615.00	45	6	30	7	7
FCSTIF 6524 PS	$615.00	45	6	30	7	7
FCSTIF 6524 SB	$615.00	45	6	30	7	7
FCSTIF 6524 SS	$600.00	45	6	30	7	7
FCSTIF 6532 BK	$790.00	45	8	37	7	7
FCSTIF 6532 ORB	$790.00	45	8	37	7	7
FCSTIF 6532 PS	$790.00	45	8	37	7	7
FCSTIF 6532 SB	$790.00	45	8	37	7	7
FCSTIF 6532 SS	$775.00	45	8	37	7	7
FCSTIF 6536 BK	$900.00	45	8	41	7	7
FCSTIF 6536 ORB	$900.00	45	8	41	7	7
FCSTIF 6536 PS	$900.00	45	8	41	7	7
FCSTIF 6536 SB	$900.00	45	8	41	7	7
FCSTIF 6536 SS	$880.00	45	8	41	7	7
FCSTIF 6542 BK	$980.00	45	9	47	7	7
FCSTIF 6542 ORB	$980.00	45	9	47	7	7
FCSTIF 6542 PS	$980.00	45	9	47	7	7
FCSTIF 6542 SB	$980.00	45	9	47	7	7
FCSTIF 6542 SS	$960.00	45	9	47	7	7
FCSTIF 6548 BK	$1,110.00	45	10	53	7	7

SKU	List Price	Page #	Shipping Dimensions (inches)			
			Lbs	L	W	H
FCSTIF 6548 ORB	$1,110.00	45	10	53	7	7
FCSTIF 6548 PS	$1,110.00	45	10	53	7	7
FCSTIF 6548 SB	$1,110.00	45	10	53	7	7
FCSTIF 6548 SS	$1,090.00	45	10	53	7	7
FCSTIF 6560 BK	$1,330.00	45	11	65	7	7
FCSTIF 6560 ORB	$1,330.00	45	11	65	7	7
FCSTIF 6560 PS	$1,330.00	45	11	65	7	7
FCSTIF 6560 SB	$1,330.00	45	11	65	7	7
FCSTIF 6560 SS	$1,305.00	45	11	65	7	7
FFAS 12532 BK	$1,525.00	41	14	37	7	7
FFAS 12532 ORB	$1,525.00	41	14	37	7	7
FFAS 12532 PS	$1,525.00	41	14	37	7	7
FFAS 12532 SB	$1,525.00	41	14	37	7	7
FFAS 12532 SS	$1,225.00	41	14	37	7	7
FFAS 12536 BK	$1,655.00	41	15	41	7	7
FFAS 12536 ORB	$1,655.00	41	15	41	7	7
FFAS 12536 PS	$1,655.00	41	15	41	7	7
FFAS 12536 SB	$1,655.00	41	15	41	7	7
FFAS 12536 SS	$1,355.00	41	15	41	7	7
FFAS 12542 BK	$1,740.00	41	18	47	7	7
FFAS 12542 ORB	$1,740.00	41	18	47	7	7
FFAS 12542 PS	$1,740.00	41	18	47	7	7
FFAS 12542 SB	$1,740.00	41	18	47	7	7
FFAS 12542 SS	$1,440.00	41	18	47	7	7
FFAS 12548 BK	$1,840.00	41	19	53	7	7
FFAS 12548 ORB	$1,840.00	41	19	53	7	7
FFAS 12548 PS	$1,840.00	41	19	53	7	7
FFAS 12548 SB	$1,840.00	41	19	53	7	7
FFAS 12548 SS	$1,540.00	41	19	53	7	7
FFAS 12560 BK	$2,080.00	41	23	65	7	7
FFAS 12560 ORB	$2,080.00	41	23	65	7	7
FFAS 12560 PS	$2,080.00	41	23	65	7	7
FFAS 12560 SB	$2,080.00	41	23	65	7	7
FFAS 12560 SS	$1,780.00	41	23	65	7	7
FFAS 2532 BK	$1,040.00	41	9	37	7	7
FFAS 2532 ORB	$1,040.00	41	9	37	7	7
FFAS 2532 PS	$1,040.00	41	9	37	7	7
FFAS 2532 SB	$1,040.00	41	9	37	7	7
FFAS 2532 SS	$910.00	41	9	37	7	7
FFAS 2536 BK	$1,125.00	41	10	41	7	7
FFAS 2536 ORB	$1,125.00	41	10	41	7	7
FFAS 2536 PS	$1,125.00	41	10	41	7	7
FFAS 2536 SB	$1,125.00	41	10	41	7	7
FFAS 2536 SS	$995.00	41	10	41	7	7

Price Sheet & Index

SKU	List Price	Page #	Shipping Dimensions (inches)			
			Lbs	L	W	H
FFAS 2542 BK	$1,310.00	41	12	47	7	7
FFAS 2542 ORB	$1,310.00	41	12	47	7	7
FFAS 2542 PS	$1,310.00	41	12	47	7	7
FFAS 2542 SB	$1,310.00	41	12	47	7	7
FFAS 2542 SS	$1,210.00	41	12	47	7	7
FFAS 2548 BK	$1,360.00	41	13	53	7	7
FFAS 2548 ORB	$1,360.00	41	13	53	7	7
FFAS 2548 PS	$1,360.00	41	13	53	7	7
FFAS 2548 SB	$1,360.00	41	13	53	7	7
FFAS 2548 SS	$1,260.00	41	13	53	7	7
FFAS 2560 BK	$1,545.00	41	16	65	7	7
FFAS 2560 ORB	$1,545.00	41	16	65	7	7
FFAS 2560 PS	$1,545.00	41	16	65	7	7
FFAS 2560 SB	$1,545.00	41	16	65	7	7
FFAS 2560 SS	$1,395.00	41	16	65	7	7
FFAS 6524 BK	$870.00	40	7	30	7	7
FFAS 6524 ORB	$870.00	40	7	30	7	7
FFAS 6524 PS	$870.00	40	7	30	7	7
FFAS 6524 SB	$870.00	40	7	30	7	7
FFAS 6524 SS	$710.00	40	7	30	7	7
FFAS 6532 BK	$1,140.00	40	9	37	7	7
FFAS 6532 ORB	$1,140.00	40	9	37	7	7
FFAS 6532 PS	$1,140.00	40	9	37	7	7
FFAS 6532 SB	$1,140.00	40	9	37	7	7
FFAS 6532 SS	$975.00	40	9	37	7	7
FFAS 6536 BK	$1,180.00	40	8	41	7	7
FFAS 6536 ORB	$1,180.00	40	8	41	7	7
FFAS 6536 PS	$1,180.00	40	8	41	7	7
FFAS 6536 SB	$1,180.00	40	8	41	7	7
FFAS 6536 SS	$1,015.00	40	8	41	7	7
FFAS 6542 BK	$1,290.00	40	11	47	7	7
FFAS 6542 ORB	$1,290.00	40	11	47	7	7
FFAS 6542 PS	$1,290.00	40	11	47	7	7
FFAS 6542 SB	$1,290.00	40	11	47	7	7
FFAS 6542 SS	$1,125.00	40	11	47	7	7
FFAS 6548 BK	$1,335.00	40	13	53	7	7
FFAS 6548 ORB	$1,335.00	40	13	53	7	7
FFAS 6548 PS	$1,335.00	40	13	53	7	7
FFAS 6548 SB	$1,335.00	40	13	53	7	7
FFAS 6548 SS	$1,210.00	40	13	53	7	7
FFAS 6560 BK	$1,605.00	40	15	65	7	7
FFAS 6560 ORB	$1,605.00	40	15	65	7	7
FFAS 6560 PS	$1,605.00	40	15	65	7	7
FFAS 6560 SB	$1,605.00	40	15	65	7	7

SKU	List Price	Page #	Shipping Dimensions (inches)			
			Lbs	L	W	H
FFAS 6560 SS	$1,440.00	40	15	65	7	7
FFED 6524 BK	$465.00	37	6	30	7	7
FFED 6524 ORB	$465.00	37	6	30	7	7
FFED 6524 PS	$465.00	37	6	30	7	7
FFED 6524 SB	$465.00	37	6	30	7	7
FFED 6524 SS	$400.00	37	6	30	7	7
FFED 6532 BK	$570.00	37	8	37	7	7
FFED 6532 ORB	$570.00	37	8	37	7	7
FFED 6532 PS	$570.00	37	8	37	7	7
FFED 6532 SB	$570.00	37	8	37	7	7
FFED 6532 SS	$535.00	37	8	37	7	7
FFED 6536 BK	$645.00	37	9	41	7	7
FFED 6536 ORB	$645.00	37	9	41	7	7
FFED 6536 PS	$645.00	37	9	41	7	7
FFED 6536 SB	$645.00	37	9	41	7	7
FFED 6536 SS	$575.00	37	9	41	7	7
FFED 6542 BK	$710.00	37	10	47	7	7
FFED 6542 ORB	$710.00	37	10	47	7	7
FFED 6542 PS	$710.00	37	10	47	7	7
FFED 6542 SB	$710.00	37	10	47	7	7
FFED 6542 SS	$635.00	37	10	47	7	7
FFED 6548 BK	$770.00	37	11	53	7	7
FFED 6548 ORB	$770.00	37	11	53	7	7
FFED 6548 PS	$770.00	37	11	53	7	7
FFED 6548 SB	$770.00	37	11	53	7	7
FFED 6548 SS	$690.00	37	11	53	7	7
FFED 6560 BK	$940.00	37	13	65	7	7
FFED 6560 ORB	$940.00	37	13	65	7	7
FFED 6560 PS	$940.00	37	13	65	7	7
FFED 6560 SB	$940.00	37	13	65	7	7
FFED 6560 SS	$840.00	37	13	65	7	7
FFIG 6524 BK	$465.00	38	6	30	7	7
FFIG 6524 ORB	$465.00	38	6	30	7	7
FFIG 6524 PS	$465.00	38	6	30	7	7
FFIG 6524 SB	$465.00	38	6	30	7	7
FFIG 6524 SS	$400.00	38	6	30	7	7
FFIG 6532 BK	$570.00	38	8	37	7	7
FFIG 6532 ORB	$570.00	38	8	37	7	7
FFIG 6532 PS	$570.00	38	8	37	7	7
FFIG 6532 SB	$570.00	38	8	37	7	7
FFIG 6532 SS	$535.00	38	8	37	7	7
FFIG 6536 BK	$645.00	38	9	41	7	7
FFIG 6536 ORB	$645.00	38	9	41	7	7
FFIG 6536 PS	$645.00	38	9	41	7	7

Price Sheet & Index

SKU	List Price	Page #	Shipping Dimensions (inches)			
			Lbs	L	W	H
FFIG 6536 SB	$645.00	38	9	41	7	7
FFIG 6536 SS	$575.00	38	9	41	7	7
FFIG 6542 BK	$710.00	38	10	47	7	7
FFIG 6542 ORB	$710.00	38	10	47	7	7
FFIG 6542 PS	$710.00	38	10	47	7	7
FFIG 6542 SB	$710.00	38	10	47	7	7
FFIG 6542 SS	$635.00	38	10	47	7	7
FFIG 6548 BK	$770.00	38	11	53	7	7
FFIG 6548 ORB	$770.00	38	11	53	7	7
FFIG 6548 PS	$770.00	38	11	53	7	7
FFIG 6548 SB	$770.00	38	11	53	7	7
FFIG 6548 SS	$690.00	38	11	53	7	7
FFIG 6560 BK	$940.00	38	12	65	7	7
FFIG 6560 ORB	$940.00	38	12	65	7	7
FFIG 6560 PS	$940.00	38	12	65	7	7
FFIG 6560 SB	$940.00	38	12	65	7	7
FFIG 6560 SS	$840.00	38	12	65	7	7
FFMN 6532 BK	$810.00	37	8	37	7	7
FFMN 6532 ORB	$810.00	37	8	37	7	7
FFMN 6532 PS	$810.00	37	8	37	7	7
FFMN 6532 SB	$810.00	37	8	37	7	7
FFMN 6532 SS	$660.00	37	8	37	7	7
FFMN 6536 BK	$875.00	37	9	41	7	7
FFMN 6536 ORB	$875.00	37	9	41	7	7
FFMN 6536 PS	$875.00	37	9	41	7	7
FFMN 6536 SB	$875.00	37	9	41	7	7
FFMN 6536 SS	$725.00	37	9	41	7	7
FFMN 6542 BK	$940.00	37	10	47	7	7
FFMN 6542 ORB	$940.00	37	10	47	7	7
FFMN 6542 PS	$940.00	37	10	47	7	7
FFMN 6542 SB	$940.00	37	10	47	7	7
FFMN 6542 SS	$790.00	37	10	47	7	7
FFMN 6548 BK	$1,035.00	37	11	53	7	7
FFMN 6548 ORB	$1,035.00	37	11	53	7	7
FFMN 6548 PS	$1,035.00	37	11	53	7	7
FFMN 6548 SB	$1,035.00	37	11	53	7	7
FFMN 6548 SS	$855.00	37	11	53	7	7
FFMN 6560 BK	$1,275.00	37	13	65	7	7
FFMN 6560 ORB	$1,275.00	37	13	65	7	7
FFMN 6560 PS	$1,275.00	37	13	65	7	7
FFMN 6560 SB	$1,275.00	37	13	65	7	7
FFMN 6560 SS	$1,125.00	37	13	65	7	7
FFSG 6524 BK	$925.00	38	8	30	7	7
FFSG 6524 ORB	$925.00	38	8	30	7	7

SKU	List Price	Page #	Shipping Dimensions (inches)			
			Lbs	L	W	H
FFSG 6524 PS	$925.00	38	8	30	7	7
FFSG 6524 SB	$925.00	38	8	30	7	7
FFSG 6524 SS	$780.00	38	8	30	7	7
FFSG 6532 BK	$1,015.00	38	10	37	7	7
FFSG 6532 ORB	$1,015.00	38	10	37	7	7
FFSG 6532 PS	$1,015.00	38	10	37	7	7
FFSG 6532 SB	$1,015.00	38	10	37	7	7
FFSG 6532 SS	$915.00	38	10	37	7	7
FFSG 6536 BK	$1,065.00	38	11	41	7	7
FFSG 6536 ORB	$1,065.00	38	11	41	7	7
FFSG 6536 PS	$1,065.00	38	11	41	7	7
FFSG 6536 SB	$1,065.00	38	11	41	7	7
FFSG 6536 SS	$960.00	38	11	41	7	7
FFSG 6542 BK	$1,130.00	38	12	47	7	7
FFSG 6542 ORB	$1,130.00	38	12	47	7	7
FFSG 6542 PS	$1,130.00	38	12	47	7	7
FFSG 6542 SB	$1,130.00	38	12	47	7	7
FFSG 6542 SS	$985.00	38	12	47	7	7
FFSG 6548 BK	$1,165.00	38	13	53	7	7
FFSG 6548 ORB	$1,165.00	38	13	53	7	7
FFSG 6548 PS	$1,165.00	38	13	53	7	7
FFSG 6548 SB	$1,165.00	38	13	53	7	7
FFSG 6548 SS	$1,010.00	38	13	53	7	7
FFSG 6560 BK	$1,410.00	38	15	65	7	7
FFSG 6560 ORB	$1,410.00	38	15	65	7	7
FFSG 6560 PS	$1,410.00	38	15	65	7	7
FFSG 6560 SB	$1,410.00	38	15	65	7	7
FFSG 6560 SS	$1,260.00	38	15	65	7	7
FFST 24 BK	$555.00	42	5	30	7	7
FFST 24 ORB	$555.00	42	5	30	7	7
FFST 24 PS	$555.00	42	5	30	7	7
FFST 24 SB	$555.00	42	5	30	7	7
FFST 24 SS	$525.00	42	5	30	7	7
FFST 32 BK	$685.00	42	6	37	7	7
FFST 32 ORB	$685.00	42	6	37	7	7
FFST 32 PS	$685.00	42	6	37	7	7
FFST 32 SB	$685.00	42	6	37	7	7
FFST 32 SS	$650.00	42	6	37	7	7
FFST 36 BK	$765.00	42	7	41	7	7
FFST 36 ORB	$765.00	42	7	41	7	7
FFST 36 PS	$765.00	42	7	41	7	7
FFST 36 SB	$765.00	42	7	41	7	7
FFST 36 SS	$715.00	42	7	41	7	7
FFST 42 BK	$865.00	42	8	47	7	7

Price Sheet & Index

SKU	List Price	Page #	Shipping Dimensions (inches)			
			Lbs	L	W	H
FFST 42 ORB	$865.00	42	8	47	7	7
FFST 42 PS	$865.00	42	8	47	7	7
FFST 42 SB	$865.00	42	8	47	7	7
FFST 42 SS	$810.00	42	8	47	7	7
FFST 48 BK	$970.00	42	9	53	7	7
FFST 48 ORB	$970.00	42	9	53	7	7
FFST 48 PS	$970.00	42	9	53	7	7
FFST 48 SB	$970.00	42	9	53	7	7
FFST 48 SS	$910.00	42	9	53	7	7
FFST 60 BK	$1,145.00	42	10	65	7	7
FFST 60 ORB	$1,145.00	42	10	65	7	7
FFST 60 PS	$1,145.00	42	10	65	7	7
FFST 60 SB	$1,145.00	42	10	65	7	7
FFST 60 SS	$1,070.00	42	10	65	7	7
FFTIF 6524 BK	$535.00	39	6	30	7	7
FFTIF 6524 ORB	$535.00	39	6	30	7	7
FFTIF 6524 PS	$535.00	39	6	30	7	7
FFTIF 6524 SB	$535.00	39	6	30	7	7
FFTIF 6524 SS	$520.00	39	6	30	7	7
FFTIF 6532 BK	$680.00	39	8	37	7	7
FFTIF 6532 ORB	$680.00	39	8	37	7	7
FFTIF 6532 PS	$680.00	39	8	37	7	7
FFTIF 6532 SB	$680.00	39	8	37	7	7
FFTIF 6532 SS	$665.00	39	8	37	7	7
FFTIF 6536 BK	$770.00	39	8	41	7	7
FFTIF 6536 ORB	$770.00	39	8	41	7	7
FFTIF 6536 PS	$770.00	39	8	41	7	7
FFTIF 6536 SB	$770.00	39	8	41	7	7
FFTIF 6536 SS	$750.00	39	8	41	7	7
FFTIF 6542 BK	$810.00	39	9	47	7	7
FFTIF 6542 ORB	$810.00	39	9	47	7	7
FFTIF 6542 PS	$810.00	39	9	47	7	7
FFTIF 6542 SB	$810.00	39	9	47	7	7
FFTIF 6542 SS	$790.00	39	9	47	7	7
FFTIF 6548 BK	$905.00	39	10	53	7	7
FFTIF 6548 ORB	$905.00	39	10	53	7	7
FFTIF 6548 PS	$905.00	39	10	53	7	7
FFTIF 6548 SB	$905.00	39	10	53	7	7
FFTIF 6548 SS	$885.00	39	10	53	7	7
FFTIF 6560 BK	$1,115.00	39	11	65	7	7
FFTIF 6560 ORB	$1,115.00	39	11	65	7	7
FFTIF 6560 PS	$1,115.00	39	11	65	7	7
FFTIF 6560 SB	$1,115.00	39	11	65	7	7
FFTIF 6560 SS	$1,090.00	39	11	65	7	7

SKU	List Price	Page #	Shipping Dimensions (inches)			
			Lbs	L	W	H
FTAS 6524 BK	$980.00	58	7	30	7	7
FTAS 6524 ORB	$980.00	58	7	30	7	7
FTAS 6524 PS	$980.00	58	7	30	7	7
FTAS 6524 SB	$980.00	58	7	30	7	7
FTAS 6524 SS	$820.00	58	7	30	7	7
FTAS 6532 BK	$1,240.00	58	8	37	7	7
FTAS 6532 ORB	$1,240.00	58	8	37	7	7
FTAS 6532 PS	$1,240.00	58	8	37	7	7
FTAS 6532 SB	$1,240.00	58	8	37	7	7
FTAS 6532 SS	$1,075.00	58	8	37	7	7
FTAS 6536 BK	$1,255.00	58	9	41	7	7
FTAS 6536 ORB	$1,255.00	58	9	41	7	7
FTAS 6536 PS	$1,255.00	58	9	41	7	7
FTAS 6536 SB	$1,255.00	58	9	41	7	7
FTAS 6536 SS	$1,090.00	58	9	41	7	7
FTAS 6542 BK	$1,395.00	58	11	47	7	7
FTAS 6542 ORB	$1,395.00	58	11	47	7	7
FTAS 6542 PS	$1,395.00	58	11	47	7	7
FTAS 6542 SB	$1,395.00	58	11	47	7	7
FTAS 6542 SS	$1,230.00	58	11	47	7	7
FTAS 6548 BK	$1,490.00	58	13	53	7	7
FTAS 6548 ORB	$1,490.00	58	13	53	7	7
FTAS 6548 PS	$1,490.00	58	13	53	7	7
FTAS 6548 SB	$1,490.00	58	13	53	7	7
FTAS 6548 SS	$1,325.00	58	13	53	7	7
FTAS 6560 BK	$1,710.00	58	15	65	7	7
FTAS 6560 ORB	$1,710.00	58	15	65	7	7
FTAS 6560 PS	$1,710.00	58	15	65	7	7
FTAS 6560 SB	$1,710.00	58	15	65	7	7
FTAS 6560 SS	$1,545.00	58	15	65	7	7
FTED 6524 BK	$575.00	55	6	30	7	7
FTED 6524 ORB	$575.00	55	6	30	7	7
FTED 6524 PS	$575.00	55	6	30	7	7
FTED 6524 SB	$575.00	55	6	30	7	7
FTED 6524 SS	$510.00	55	6	30	7	7
FTED 6532 BK	$740.00	55	8	37	7	7
FTED 6532 ORB	$740.00	55	8	37	7	7
FTED 6532 PS	$740.00	55	8	37	7	7
FTED 6532 SB	$740.00	55	8	37	7	7
FTED 6532 SS	$705.00	55	8	37	7	7
FTED 6536 BK	$790.00	55	9	41	7	7
FTED 6536 ORB	$790.00	55	9	41	7	7
FTED 6536 PS	$790.00	55	9	41	7	7
FTED 6536 SB	$790.00	55	9	41	7	7

Price Sheet & Index

SKU	List Price	Page #	Shipping Dimensions (inches)			
			Lbs	L	W	H
FTED 6536 SS	$720.00	55	9	41	7	7
FTED 6542 BK	$885.00	55	10	47	7	7
FTED 6542 ORB	$885.00	55	10	47	7	7
FTED 6542 PS	$885.00	55	10	47	7	7
FTED 6542 SB	$885.00	55	10	47	7	7
FTED 6542 SS	$810.00	55	10	47	7	7
FTED 6548 BK	$945.00	55	11	53	7	7
FTED 6548 ORB	$945.00	55	11	53	7	7
FTED 6548 PS	$945.00	55	11	53	7	7
FTED 6548 SB	$945.00	55	11	53	7	7
FTED 6548 SS	$865.00	55	11	53	7	7
FTED 6560 BK	$1,115.00	55	13	65	7	7
FTED 6560 ORB	$1,115.00	55	13	65	7	7
FTED 6560 PS	$1,115.00	55	13	65	7	7
FTED 6560 SB	$1,115.00	55	13	65	7	7
FTED 6560 SS	$1,015.00	55	13	65	7	7
FTIG 6524 BK	$575.00	56	6	30	7	7
FTIG 6524 ORB	$575.00	56	6	30	7	7
FTIG 6524 PS	$575.00	56	6	30	7	7
FTIG 6524 SB	$575.00	56	6	30	7	7
FTIG 6524 SS	$510.00	56	6	30	7	7
FTIG 6532 BK	$740.00	56	8	37	7	7
FTIG 6532 ORB	$740.00	56	8	37	7	7
FTIG 6532 PS	$740.00	56	8	37	7	7
FTIG 6532 SB	$740.00	56	8	37	7	7
FTIG 6532 SS	$705.00	56	8	37	7	7
FTIG 6536 BK	$790.00	56	9	41	7	7
FTIG 6536 ORB	$790.00	56	9	41	7	7
FTIG 6536 PS	$790.00	56	9	41	7	7
FTIG 6536 SB	$790.00	56	9	41	7	7
FTIG 6536 SS	$720.00	56	9	41	7	7
FTIG 6542 BK	$885.00	56	10	47	7	7
FTIG 6542 ORB	$885.00	56	10	47	7	7
FTIG 6542 PS	$885.00	56	10	47	7	7
FTIG 6542 SB	$885.00	56	10	47	7	7
FTIG 6542 SS	$810.00	56	10	47	7	7
FTIG 6548 BK	$945.00	56	11	53	7	7
FTIG 6548 ORB	$945.00	56	11	53	7	7
FTIG 6548 PS	$945.00	56	11	53	7	7
FTIG 6548 SB	$945.00	56	11	53	7	7
FTIG 6548 SS	$865.00	56	11	53	7	7
FTIG 6560 BK	$1,115.00	56	13	65	7	7
FTIG 6560 ORB	$1,115.00	56	13	65	7	7
FTIG 6560 PS	$1,115.00	56	13	65	7	7

SKU	List Price	Page #	Shipping Dimensions (inches)			
			Lbs	L	W	H
FTIG 6560 SB	$1,115.00	56	13	65	7	7
FTIG 6560 SS	$1,015.00	56	13	65	7	7
FTMN 6532 BK	$910.00	55	8	37	7	7
FTMN 6532 ORB	$910.00	55	8	37	7	7
FTMN 6532 PS	$910.00	55	8	37	7	7
FTMN 6532 SB	$910.00	55	8	37	7	7
FTMN 6532 SS	$760.00	55	8	37	7	7
FTMN 6536 BK	$950.00	55	9	41	7	7
FTMN 6536 ORB	$950.00	55	9	41	7	7
FTMN 6536 PS	$950.00	55	9	41	7	7
FTMN 6536 SB	$950.00	55	9	41	7	7
FTMN 6536 SS	$800.00	55	9	41	7	7
FTMN 6542 BK	$1,045.00	55	10	47	7	7
FTMN 6542 ORB	$1,045.00	55	10	47	7	7
FTMN 6542 PS	$1,045.00	55	10	47	7	7
FTMN 6542 SB	$1,045.00	55	10	47	7	7
FTMN 6542 SS	$895.00	55	10	47	7	7
FTMN 6548 BK	$1,140.00	55	11	53	7	7
FTMN 6548 ORB	$1,140.00	55	11	53	7	7
FTMN 6548 PS	$1,140.00	55	11	53	7	7
FTMN 6548 SB	$1,140.00	55	11	53	7	7
FTMN 6548 SS	$960.00	55	11	53	7	7
FTMN 6560 BK	$1,380.00	55	13	65	7	7
FTMN 6560 ORB	$1,380.00	55	13	65	7	7
FTMN 6560 PS	$1,380.00	55	13	65	7	7
FTMN 6560 SB	$1,380.00	55	13	65	7	7
FTMN 6560 SS	$1,230.00	55	13	65	7	7
FTSG 6524 BK	$1,035.00	56	8	30	7	7
FTSG 6524 ORB	$1,035.00	56	8	30	7	7
FTSG 6524 PS	$1,035.00	56	8	30	7	7
FTSG 6524 SB	$1,035.00	56	8	30	7	7
FTSG 6524 SS	$890.00	56	8	30	7	7
FTSG 6532 BK	$1,185.00	56	10	37	7	7
FTSG 6532 ORB	$1,185.00	56	10	37	7	7
FTSG 6532 PS	$1,185.00	56	10	37	7	7
FTSG 6532 SB	$1,185.00	56	10	37	7	7
FTSG 6532 SS	$1,085.00	56	10	37	7	7
FTSG 6536 BK	$1,210.00	56	11	41	7	7
FTSG 6536 ORB	$1,210.00	56	11	41	7	7
FTSG 6536 PS	$1,210.00	56	11	41	7	7
FTSG 6536 SB	$1,210.00	56	11	41	7	7
FTSG 6536 SS	$1,105.00	56	11	41	7	7
FTSG 6542 BK	$1,305.00	56	12	47	7	7
FTSG 6542 ORB	$1,305.00	56	12	47	7	7

Price Sheet & Index

SKU	List Price	Page #	Shipping Dimensions (inches)			
			Lbs	L	W	H
FTSG 6542 PS	$1,305.00	56	12	47	7	7
FTSG 6542 SB	$1,305.00	56	12	47	7	7
FTSG 6542 SS	$1,160.00	56	12	47	7	7
FTSG 6548 BK	$1,340.00	56	13	53	7	7
FTSG 6548 ORB	$1,340.00	56	13	53	7	7
FTSG 6548 PS	$1,340.00	56	13	53	7	7
FTSG 6548 SB	$1,340.00	56	13	53	7	7
FTSG 6548 SS	$1,185.00	56	13	53	7	7
FTSG 6560 BK	$1,585.00	56	15	65	7	7
FTSG 6560 ORB	$1,585.00	56	15	65	7	7
FTSG 6560 PS	$1,585.00	56	15	65	7	7
FTSG 6560 SB	$1,585.00	56	15	65	7	7
FTSG 6560 SS	$1,435.00	56	15	65	7	7
FTTIF 6524 BK	$645.00	57	6	30	7	7
FTTIF 6524 ORB	$645.00	57	6	30	7	7
FTTIF 6524 PS	$645.00	57	6	30	7	7
FTTIF 6524 SB	$645.00	57	6	30	7	7
FTTIF 6524 SS	$630.00	57	6	30	7	7
FTTIF 6532 BK	$850.00	57	8	37	7	7
FTTIF 6532 ORB	$850.00	57	8	37	7	7
FTTIF 6532 PS	$850.00	57	8	37	7	7
FTTIF 6532 SB	$850.00	57	8	37	7	7
FTTIF 6532 SS	$835.00	57	8	37	7	7
FTTIF 6536 BK	$915.00	57	8	41	7	7
FTTIF 6536 ORB	$915.00	57	8	41	7	7
FTTIF 6536 PS	$915.00	57	8	41	7	7
FTTIF 6536 SB	$915.00	57	8	41	7	7
FTTIF 6536 SS	$895.00	57	8	41	7	7
FTTIF 6542 BK	$985.00	57	9	47	7	7
FTTIF 6542 ORB	$985.00	57	9	47	7	7
FTTIF 6542 PS	$985.00	57	9	47	7	7
FTTIF 6542 SB	$985.00	57	9	47	7	7
FTTIF 6542 SS	$965.00	57	9	47	7	7
FTTIF 6548 BK	$1,080.00	57	10	53	7	7
FTTIF 6548 ORB	$1,080.00	57	10	53	7	7
FTTIF 6548 PS	$1,080.00	57	10	53	7	7
FTTIF 6548 SB	$1,080.00	57	10	53	7	7
FTTIF 6548 SS	$1,060.00	57	10	53	7	7
FTTIF 6560 BK	$1,290.00	57	11	65	7	7
FTTIF 6560 ORB	$1,290.00	57	11	65	7	7
FTTIF 6560 PS	$1,290.00	57	11	65	7	7
FTTIF 6560 SB	$1,290.00	57	11	65	7	7
FTTIF 6560 SS	$1,265.00	57	11	65	7	7
FXAS 12532-A BK	$1,890.00	36	13	37	7	7

SKU	List Price	Page #	Shipping Dimensions (inches)			
			Lbs	L	W	H
FXAS 12532-A ORB	$1,890.00	36	13	37	7	7
FXAS 12532-A PS	$1,890.00	36	13	37	7	7
FXAS 12532-A SB	$1,890.00	36	13	37	7	7
FXAS 12532-A SS	$1,490.00	36	13	37	7	7
FXAS 12532-I BK	$1,890.00	36	13	37	7	7
FXAS 12532-I ORB	$1,890.00	36	13	37	7	7
FXAS 12532-I PS	$1,890.00	36	13	37	7	7
FXAS 12532-I SB	$1,890.00	36	13	37	7	7
FXAS 12532-I SS	$1,490.00	36	13	37	7	7
FXAS 12532-P BK	$1,890.00	36	13	37	7	7
FXAS 12532-P ORB	$1,890.00	36	13	37	7	7
FXAS 12532-P PS	$1,890.00	36	13	37	7	7
FXAS 12532-P SB	$1,890.00	36	13	37	7	7
FXAS 12532-P SS	$1,490.00	36	13	37	7	7
FXAS 12536-A BK	$2,010.00	36	14	41	7	7
FXAS 12536-A ORB	$2,010.00	36	14	41	7	7
FXAS 12536-A PS	$2,010.00	36	14	41	7	7
FXAS 12536-A SB	$2,010.00	36	14	41	7	7
FXAS 12536-A SS	$1,610.00	36	14	41	7	7
FXAS 12536-I BK	$2,010.00	36	14	41	7	7
FXAS 12536-I ORB	$2,010.00	36	14	41	7	7
FXAS 12536-I PS	$2,010.00	36	14	41	7	7
FXAS 12536-I SB	$2,010.00	36	14	41	7	7
FXAS 12536-I SS	$1,610.00	36	14	41	7	7
FXAS 12536-P BK	$2,010.00	36	14	41	7	7
FXAS 12536-P ORB	$2,010.00	36	14	41	7	7
FXAS 12536-P PS	$2,010.00	36	14	41	7	7
FXAS 12536-P SB	$2,010.00	36	14	41	7	7
FXAS 12536-P SS	$1,610.00	36	14	41	7	7
FXAS 12542-A BK	$2,080.00	36	17	47	7	7
FXAS 12542-A ORB	$2,080.00	36	17	47	7	7
FXAS 12542-A PS	$2,080.00	36	17	47	7	7
FXAS 12542-A SB	$2,080.00	36	17	47	7	7
FXAS 12542-A SS	$1,690.00	36	17	47	7	7
FXAS 12542-I BK	$2,080.00	36	17	47	7	7
FXAS 12542-I ORB	$2,080.00	36	17	47	7	7
FXAS 12542-I PS	$2,080.00	36	17	47	7	7
FXAS 12542-I SB	$2,080.00	36	17	47	7	7
FXAS 12542-I SS	$1,690.00	36	17	47	7	7
FXAS 12542-P BK	$2,080.00	36	17	47	7	7
FXAS 12542-P ORB	$2,080.00	36	17	47	7	7
FXAS 12542-P PS	$2,080.00	36	17	47	7	7
FXAS 12542-P SB	$2,080.00	36	17	47	7	7
FXAS 12542-P SS	$1,690.00	36	17	47	7	7

Price Sheet & Index

SKU	List Price	Page #	Shipping Dimensions (inches)			
			Lbs	L	W	H
FXAS 12548-A BK	$2,205.00	36	18	53	7	7
FXAS 12548-A ORB	$2,205.00	36	18	53	7	7
FXAS 12548-A PS	$2,205.00	36	18	53	7	7
FXAS 12548-A SB	$2,205.00	36	18	53	7	7
FXAS 12548-A SS	$1,805.00	36	18	53	7	7
FXAS 12548-I BK	$2,205.00	36	18	53	7	7
FXAS 12548-I ORB	$2,205.00	36	18	53	7	7
FXAS 12548-I PS	$2,205.00	36	18	53	7	7
FXAS 12548-I SB	$2,205.00	36	18	53	7	7
FXAS 12548-I SS	$1,805.00	36	18	53	7	7
FXAS 12548-P BK	$2,205.00	36	18	53	7	7
FXAS 12548-P ORB	$2,205.00	36	18	53	7	7
FXAS 12548-P PS	$2,205.00	36	18	53	7	7
FXAS 12548-P SB	$2,205.00	36	18	53	7	7
FXAS 12548-P SS	$1,805.00	36	18	53	7	7
FXAS 12560-A BK	$2,430.00	36	22	65	7	7
FXAS 12560-A ORB	$2,430.00	36	22	65	7	7
FXAS 12560-A PS	$2,430.00	36	22	65	7	7
FXAS 12560-A SB	$2,430.00	36	22	65	7	7
FXAS 12560-A SS	$1,920.00	36	22	65	7	7
FXAS 12560-I BK	$2,430.00	36	22	65	7	7
FXAS 12560-I ORB	$2,430.00	36	22	65	7	7
FXAS 12560-I PS	$2,430.00	36	22	65	7	7
FXAS 12560-I SB	$2,430.00	36	22	65	7	7
FXAS 12560-I SS	$1,920.00	36	22	65	7	7
FXAS 12560-P BK	$2,430.00	36	22	65	7	7
FXAS 12560-P ORB	$2,430.00	36	22	65	7	7
FXAS 12560-P PS	$2,430.00	36	22	65	7	7
FXAS 12560-P SB	$2,430.00	36	22	65	7	7
FXAS 12560-P SS	$1,920.00	36	22	65	7	7
FXAS 6532 BK	$1,145.00	35	9	37	7	7
FXAS 6532 ORB	$1,145.00	35	9	37	7	7
FXAS 6532 PS	$1,145.00	35	9	37	7	7
FXAS 6532 SB	$1,145.00	35	9	37	7	7
FXAS 6532 SS	$935.00	35	9	37	7	7
FXAS 6536 BK	$1,185.00	35	10	41	7	7
FXAS 6536 ORB	$1,185.00	35	10	41	7	7
FXAS 6536 PS	$1,185.00	35	10	41	7	7
FXAS 6536 SB	$1,185.00	35	10	41	7	7
FXAS 6536 SS	$970.00	35	10	41	7	7
FXAS 6542 BK	$1,300.00	35	11	47	7	7
FXAS 6542 ORB	$1,300.00	35	11	47	7	7
FXAS 6542 PS	$1,300.00	35	11	47	7	7
FXAS 6542 SB	$1,300.00	35	11	47	7	7

SKU	List Price	Page #	Shipping Dimensions (inches)			
			Lbs	L	W	H
FXAS 6542 SS	$1,085.00	35	11	47	7	7
FXAS 6548 BK	$1,360.00	35	12	53	7	7
FXAS 6548 ORB	$1,360.00	35	12	53	7	7
FXAS 6548 PS	$1,360.00	35	12	53	7	7
FXAS 6548 SB	$1,360.00	35	12	53	7	7
FXAS 6548 SS	$1,175.00	35	12	53	7	7
FXAS 6560 BK	$1,595.00	35	13	65	7	7
FXAS 6560 ORB	$1,595.00	35	13	65	7	7
FXAS 6560 PS	$1,595.00	35	13	65	7	7
FXAS 6560 SB	$1,595.00	35	13	65	7	7
FXAS 6560 SS	$1,385.00	35	13	65	7	7
FXED 6532 BK	$575.00	33	7	37	7	7
FXED 6532 ORB	$575.00	33	7	37	7	7
FXED 6532 PS	$575.00	33	7	37	7	7
FXED 6532 SB	$575.00	33	7	37	7	7
FXED 6532 SS	$495.00	33	7	37	7	7
FXED 6536 BK	$650.00	33	8	41	7	7
FXED 6536 ORB	$650.00	33	8	41	7	7
FXED 6536 PS	$650.00	33	8	41	7	7
FXED 6536 SB	$650.00	33	8	41	7	7
FXED 6536 SS	$530.00	33	8	41	7	7
FXED 6542 BK	$720.00	33	9	47	7	7
FXED 6542 ORB	$720.00	33	9	47	7	7
FXED 6542 PS	$720.00	33	9	47	7	7
FXED 6542 SB	$720.00	33	9	47	7	7
FXED 6542 SS	$595.00	33	9	47	7	7
FXED 6548 BK	$795.00	33	10	53	7	7
FXED 6548 ORB	$795.00	33	10	53	7	7
FXED 6548 PS	$795.00	33	10	53	7	7
FXED 6548 SB	$795.00	33	10	53	7	7
FXED 6548 SS	$655.00	33	10	53	7	7
FXED 6560 BK	$930.00	33	12	65	7	7
FXED 6560 ORB	$930.00	33	12	65	7	7
FXED 6560 PS	$930.00	33	12	65	7	7
FXED 6560 SB	$930.00	33	12	65	7	7
FXED 6560 SS	$785.00	33	12	65	7	7
FXIG 6532 BK	$575.00	34	7	37	7	7
FXIG 6532 ORB	$575.00	34	7	37	7	7
FXIG 6532 PS	$575.00	34	7	37	7	7
FXIG 6532 SB	$575.00	34	7	37	7	7
FXIG 6532 SS	$495.00	34	7	37	7	7
FXIG 6536 BK	$650.00	34	8	41	7	7
FXIG 6536 ORB	$650.00	34	8	41	7	7
FXIG 6536 PS	$650.00	34	8	41	7	7

Price Sheet & Index

SKU	List Price	Page #	Shipping Dimensions (inches)			
			Lbs	L	W	H
FXIG 6536 SB	$650.00	34	8	41	7	7
FXIG 6536 SS	$530.00	34	8	41	7	7
FXIG 6542 BK	$720.00	34	9	47	7	7
FXIG 6542 ORB	$720.00	34	9	47	7	7
FXIG 6542 PS	$720.00	34	9	47	7	7
FXIG 6542 SB	$720.00	34	9	47	7	7
FXIG 6542 SS	$595.00	34	9	47	7	7
FXIG 6548 BK	$795.00	34	10	53	7	7
FXIG 6548 ORB	$795.00	34	10	53	7	7
FXIG 6548 PS	$795.00	34	10	53	7	7
FXIG 6548 SB	$795.00	34	10	53	7	7
FXIG 6548 SS	$655.00	34	10	53	7	7
FXIG 6560 BK	$930.00	34	12	65	7	7
FXIG 6560 ORB	$930.00	34	12	65	7	7
FXIG 6560 PS	$930.00	34	12	65	7	7
FXIG 6560 SB	$930.00	34	12	65	7	7
FXIG 6560 SS	$785.00	34	12	65	7	7
FXMN 6532 BK	$815.00	33	7	37	7	7
FXMN 6532 ORB	$815.00	33	7	37	7	7
FXMN 6532 PS	$815.00	33	7	37	7	7
FXMN 6532 SB	$815.00	33	7	37	7	7
FXMN 6532 SS	$620.00	33	7	37	7	7
FXMN 6536 BK	$880.00	33	8	41	7	7
FXMN 6536 ORB	$880.00	33	8	41	7	7
FXMN 6536 PS	$880.00	33	8	41	7	7
FXMN 6536 SB	$880.00	33	8	41	7	7
FXMN 6536 SS	$680.00	33	8	41	7	7
FXMN 6542 BK	$950.00	33	9	47	7	7
FXMN 6542 ORB	$950.00	33	9	47	7	7
FXMN 6542 PS	$950.00	33	9	47	7	7
FXMN 6542 SB	$950.00	33	9	47	7	7
FXMN 6542 SS	$750.00	33	9	47	7	7
FXMN 6548 BK	$1,060.00	33	10	53	7	7
FXMN 6548 ORB	$1,060.00	33	10	53	7	7
FXMN 6548 PS	$1,060.00	33	10	53	7	7
FXMN 6548 SB	$1,060.00	33	10	53	7	7
FXMN 6548 SS	$820.00	33	10	53	7	7
FXMN 6560 BK	$1,265.00	33	12	65	7	7
FXMN 6560 ORB	$1,265.00	33	12	65	7	7
FXMN 6560 PS	$1,265.00	33	12	65	7	7
FXMN 6560 SB	$1,265.00	33	12	65	7	7
FXMN 6560 SS	$1,070.00	33	12	65	7	7
FXSG 6532 BK	$1,020.00	34	9	37	7	7
FXSG 6532 ORB	$1,020.00	34	9	37	7	7

SKU	List Price	Page #	Shipping Dimensions (inches)			
			Lbs	L	W	H
FXSG 6532 PS	$1,020.00	34	9	37	7	7
FXSG 6532 SB	$1,020.00	34	9	37	7	7
FXSG 6532 SS	$875.00	34	9	37	7	7
FXSG 6536 BK	$1,070.00	34	10	41	7	7
FXSG 6536 ORB	$1,070.00	34	10	41	7	7
FXSG 6536 PS	$1,070.00	34	10	41	7	7
FXSG 6536 SB	$1,070.00	34	10	41	7	7
FXSG 6536 SS	$915.00	34	10	41	7	7
FXSG 6542 BK	$1,140.00	34	11	47	7	7
FXSG 6542 ORB	$1,140.00	34	11	47	7	7
FXSG 6542 PS	$1,140.00	34	11	47	7	7
FXSG 6542 SB	$1,140.00	34	11	47	7	7
FXSG 6542 SS	$945.00	34	11	47	7	7
FXSG 6548 BK	$1,190.00	34	12	53	7	7
FXSG 6548 ORB	$1,190.00	34	12	53	7	7
FXSG 6548 PS	$1,190.00	34	12	53	7	7
FXSG 6548 SB	$1,190.00	34	12	53	7	7
FXSG 6548 SS	$975.00	34	12	53	7	7
FXSG 6560 BK	$1,400.00	34	14	65	7	7
FXSG 6560 ORB	$1,400.00	34	14	65	7	7
FXSG 6560 PS	$1,400.00	34	14	65	7	7
FXSG 6560 SB	$1,400.00	34	14	65	7	7
FXSG 6560 SS	$1,205.00	34	14	65	7	7
FXTIF 6520 BK	$485.00	35	7	30	7	7
FXTIF 6520 ORB	$485.00	35	7	30	7	7
FXTIF 6520 PS	$485.00	35	7	30	7	7
FXTIF 6520 SB	$485.00	35	7	30	7	7
FXTIF 6520 SS	$440.00	35	7	30	7	7
FXTIF 6540 BK	$805.00	35	12	47	7	7
FXTIF 6540 ORB	$805.00	35	12	47	7	7
FXTIF 6540 PS	$805.00	35	12	47	7	7
FXTIF 6540 SB	$805.00	35	12	47	7	7
FXTIF 6540 SS	$720.00	35	12	47	7	7
FXTIF 6548 BK	$970.00	35	14	53	7	7
FXTIF 6548 ORB	$970.00	35	14	53	7	7
FXTIF 6548 PS	$970.00	35	14	53	7	7
FXTIF 6548 SB	$970.00	35	14	53	7	7
FXTIF 6548 SS	$885.00	35	14	53	7	7
FXTIF 6560 BK	$1,195.00	35	16	65	7	7
FXTIF 6560 ORB	$1,195.00	35	16	65	7	7
FXTIF 6560 PS	$1,195.00	35	16	65	7	7
FXTIF 6560 SB	$1,195.00	35	16	65	7	7
FXTIF 6560 SS	$1,085.00	35	16	65	7	7
G 100108	$135.00	35	8	112	7	7

Price Sheet & Index

SKU	List Price	Page #	Shipping Dimensions (inches)			
			Lbs	L	W	H
G 10048	$60.00	117	4	53	7	7
G 10096	$130.00	117	8	102	7	7
G 38108	$115.00	117	6	112	7	7
G 3836	$45.00	113	3	41	7	7
G 3848	$55.00	113	4	53	7	7
G 3860	$65.00	113	4	65	7	7
G 3872	$95.00	113	5	78	7	7
G 3896	$105.00	113	6	102	7	7
G 65108	$130.00	115	7	112	7	7
G 6536	$50.00	115	3	41	7	7
G 6540	$55.00	115	3	47	7	7
G 6548	$60.00	115	4	53	7	7
G 6560	$80.00	115	4	65	7	7
G 6572	$105.00	115	5	78	7	7
G 6580	$110.00	115	5	86	7	7
G 6596	$115.00	115	6	102	7	7
GA 100	$25.00	117	1	7	7	5
GAM 38	$25.00	113	1	4	4	4
GAM 65	$25.00	115	1	4	4	4
GAL 38	$25.00	114	1	4	4	4
GAL 65	$25.00	116	1	4	4	4
GJ 100	$10.00	117	1	4	4	4
GJC 38	$15.00	113	1	4	4	4
GJC 65	$15.00	115	1	4	4	4
GJL 38	$15.00	114	1	4	4	4
GJL 65	$15.00	116	1	4	4	4
GJS 65	$25.00	119	1	4	4	4
GL 38108	$115.00	114	6	112	7	7
GL 3836	$45.00	114	3	41	7	7
GL 3848	$55.00	114	4	53	7	7
GL 3860	$65.00	114	4	65	7	7
GL 3872	$95.00	114	5	78	7	7
GL 3896	$105.00	114	6	102	7	7
GL 65108	$115.00	116	7	112	7	7
GL 6536	$55.00	116	3	41	7	7
GL 6548	$70.00	116	4	53	7	7
GL 6560	$90.00	116	4	65	7	7
GL 6572	$115.00	116	5	78	7	7
GL 6596	$125.00	116	6	102	7	7
HC 6532 BK	$200.00	120	7	37	7	7
HC 6532 ORB	$200.00	120	7	37	7	7
HC 6532 PS	$200.00	120	7	37	7	7
HC 6532 SB	$200.00	120	7	37	7	7
HC 6532 SS	$180.00	120	7	37	7	7

SKU	List Price	Page #	Shipping Dimensions (inches)			
			Lbs	L	W	H
HC 6540 BK	$245.00	120	7	47	7	7
HC 6540 ORB	$245.00	120	7	47	7	7
HC 6540 PS	$245.00	120	7	47	7	7
HC 6540 SB	$245.00	120	7	47	7	7
HC 6540 SS	$205.00	120	7	47	7	7
HC 6552 BK	$275.00	120	8	65	7	7
HC 6552 ORB	$275.00	120	8	65	7	7
HC 6552 PS	$275.00	120	8	65	7	7
HC 6552 SB	$275.00	120	8	65	7	7
HC 6552 SS	$225.00	120	8	65	7	7
HC 6572 BK	$285.00	120	11	78	7	7
HC 6572 ORB	$285.00	120	11	78	7	7
HC 6572 PS	$285.00	120	11	78	7	7
HC 6572 SB	$285.00	120	11	78	7	7
HC 6572 SS	$275.00	120	11	78	7	7
HC 6588 BK	$415.00	120	13	96	7	7
HC 6588 ORB	$415.00	120	13	96	7	7
HC 6588 PS	$415.00	120	13	96	7	7
HC 6588 SB	$415.00	120	13	96	7	7
HC 6588 SS	$395.00	120	13	96	7	7
HF 65 BK	$110.00	120	1	7	7	4
HF 65 ORB	$110.00	120	1	7	7	4
HF 65 PS	$110.00	120	1	7	7	4
HF 65 SB	$110.00	120	1	7	7	4
HF 65 SS	$100.00	120	1	7	7	4
HF 99 BK	$620.00	120	2	7	7	4
HF 99 ORB	$620.00	120	2	7	7	4
HF 99 PS	$620.00	120	2	7	7	4
HF 99 SB	$620.00	120	2	7	7	4
HF 99 SS	$565.00	120	2	7	7	4
HS 2	$5.00	140	1	4	4	4
HS 2B	$5.00	140	1	4	4	4
HS 4	$10.00	140	1	4	4	4
IC 6520 BK	$80.00	125	4	30	7	7
IC 6520 ORB	$80.00	125	4	30	7	7
IC 6520 PS	$80.00	125	4	30	7	7
IC 6520 SB	$80.00	125	4	30	7	7
IC 6520 SS	$70.00	125	4	30	7	7
IC 6540 BK	$135.00	125	6	47	7	7
IC 6540 ORB	$135.00	125	6	47	7	7
IC 6540 PS	$135.00	125	6	47	7	7
IC 6540 SB	$135.00	125	6	47	7	7
IC 6540 SS	$125.00	125	6	47	7	7
IC 6548 BK	$180.00	125	7	53	7	7

Price Sheet & Index

SKU	List Price	Page #	Shipping Dimensions (inches)			
			Lbs	L	W	H
IC 6548 ORB	$180.00	125	7	53	7	7
IC 6548 PS	$180.00	125	7	53	7	7
IC 6548 SB	$180.00	125	7	53	7	7
IC 6548 SS	$170.00	125	7	53	7	7
IC 6560 BK	$225.00	125	8	65	7	7
IC 6560 ORB	$225.00	125	8	65	7	7
IC 6560 PS	$225.00	125	8	65	7	7
IC 6560 SB	$225.00	125	8	65	7	7
IC 6560 SS	$190.00	125	8	65	7	7
K 4 BK	$345.00	77	2	6	6	3
K 4 ORB	$345.00	77	2	6	6	3
K 4 PS	$345.00	77	2	6	6	3
K 4 SB	$345.00	77	2	6	6	3
K 4 SS	$265.00	77	2	6	6	3
K 5 BK	$380.00	78	2	6	6	3
K 5 ORB	$380.00	78	2	6	6	3
K 5 PS	$380.00	78	2	6	6	3
K 5 SB	$380.00	78	2	6	6	3
K 5 SS	$295.00	78	2	6	6	3
KA 3836 BK	$325.00	114	7	41	7	7
KA 3836 ORB	$325.00	114	7	41	7	7
KA 3836 PS	$325.00	114	7	41	7	7
KA 3836 SB	$325.00	114	7	41	7	7
KA 3836 SS	$210.00	114	7	41	7	7
KA 3848 BK	$410.00	114	8	53	7	7
KA 3848 ORB	$410.00	114	8	53	7	7
KA 3848 PS	$410.00	114	8	53	7	7
KA 3848 SB	$410.00	114	8	53	7	7
KA 3848 SS	$255.00	114	8	53	7	7
KA 3860 BK	$500.00	114	10	65	7	7
KA 3860 ORB	$500.00	114	10	65	7	7
KA 3860 PS	$500.00	114	10	65	7	7
KA 3860 SB	$500.00	114	10	65	7	7
KA 3860 SS	$355.00	114	10	65	7	7
KA 3872 BK	$645.00	114	11	78	7	7
KA 3872 ORB	$645.00	114	11	78	7	7
KA 3872 PS	$645.00	114	11	78	7	7
KA 3872 SB	$645.00	114	11	78	7	7
KA 3872 SS	$415.00	114	11	78	7	7
KA 3896 BK	$750.00	114	12	102	7	7
KA 3896 ORB	$750.00	114	12	102	7	7
KA 3896 PS	$750.00	114	12	102	7	7
KA 3896 SB	$750.00	114	12	102	7	7
KA 3896 SS	$460.00	114	12	102	7	7

SKU	List Price	Page #	Shipping Dimensions (inches)			
			Lbs	L	W	H
KA 6536 BK	$360.00	116	7	41	7	7
KA 6536 ORB	$360.00	116	7	41	7	7
KA 6536 PS	$360.00	116	7	41	7	7
KA 6536 SB	$360.00	116	7	41	7	7
KA 6536 SS	$240.00	116	7	41	7	7
KA 6548 BK	$480.00	116	8	53	7	7
KA 6548 ORB	$480.00	116	8	53	7	7
KA 6548 PS	$480.00	116	8	53	7	7
KA 6548 SB	$480.00	116	8	53	7	7
KA 6548 SS	$320.00	116	8	53	7	7
KA 6560 BK	$650.00	116	10	65	7	7
KA 6560 ORB	$650.00	116	10	65	7	7
KA 6560 PS	$650.00	116	10	65	7	7
KA 6560 SB	$650.00	116	10	65	7	7
KA 6560 SS	$450.00	116	10	65	7	7
KA 6572 BK	$720.00	116	11	78	7	7
KA 6572 ORB	$720.00	116	11	78	7	7
KA 6572 PS	$720.00	116	11	78	7	7
KA 6572 SB	$720.00	116	11	78	7	7
KA 6572 SS	$480.00	116	11	78	7	7
KA 6596 BK	$895.00	116	12	102	7	7
KA 6596 ORB	$895.00	116	12	102	7	7
KA 6596 PS	$895.00	116	12	102	7	7
KA 6596 SB	$895.00	116	12	102	7	7
KA 6596 SS	$680.00	116	12	102	7	7
KD 4-2A BK	$395.00	77	3	5	5	5
KD 4-2A ORB	$395.00	77	3	5	5	5
KD 4-2A PS	$395.00	77	3	5	5	5
KD 4-2A SB	$395.00	77	3	5	5	5
KD 4-2A SS	$315.00	77	3	5	5	5
KD 4-2H BK	$410.00	77	5	5	5	5
KD 4-2H ORB	$410.00	77	5	5	5	5
KD 4-2H PS	$410.00	77	5	5	5	5
KD 4-2H SB	$410.00	77	5	5	5	5
KD 4-2H SS	$330.00	77	5	5	5	5
KD 4-2I BK	$410.00	77	5	5	5	5
KD 4-2I ORB	$410.00	77	5	5	5	5
KD 4-2I PS	$410.00	77	5	5	5	5
KD 4-2I SB	$410.00	77	5	5	5	5
KD 4-2I SS	$330.00	77	5	5	5	5
KD 4-2P BK	$395.00	77	3	5	5	5
KD 4-2P ORB	$395.00	77	3	5	5	5
KD 4-2P PS	$395.00	77	3	5	5	5
KD 4-2P SB	$395.00	77	3	5	5	5

Price Sheet & Index

SKU	List Price	Page #	Shipping Dimensions (inches)			
			Lbs	L	W	H
KD 4-2P SS	$315.00	77	3	5	5	5
KD 5-2A BK	$430.00	78	3	6	6	6
KD 5-2A ORB	$430.00	78	3	6	6	6
KD 5-2A PS	$430.00	78	3	6	6	6
KD 5-2A SB	$430.00	78	3	6	6	6
KD 5-2A SS	$345.00	78	3	6	6	6
KD 5-2H BK	$445.00	78	6	6	6	6
KD 5-2H ORB	$445.00	78	6	6	6	6
KD 5-2H PS	$445.00	78	6	6	6	6
KD 5-2H SB	$445.00	78	6	6	6	6
KD 5-2H SS	$360.00	78	6	6	6	6
KD 5-2I BK	$445.00	78	6	6	6	6
KD 5-2I ORB	$445.00	78	6	6	6	6
KD 5-2I PS	$445.00	78	6	6	6	6
KD 5-2I SB	$445.00	78	6	6	6	6
KD 5-2I SS	$360.00	78	6	6	6	6
KD 5-2P BK	$430.00	78	3	6	6	6
KD 5-2P ORB	$430.00	78	3	6	6	6
KD 5-2P PS	$430.00	78	3	6	6	6
KD 5-2P SB	$430.00	78	3	6	6	6
KD 5-2P SS	$345.00	78	3	6	6	6
KD 5-3A BK	$500.00	78	5	9	9	7
KD 5-3A ORB	$500.00	78	5	9	9	7
KD 5-3A PS	$500.00	78	5	9	9	7
KD 5-3A SB	$500.00	78	5	9	9	7
KD 5-3A SS	$415.00	78	5	9	9	7
KD 5-3I BK	$500.00	78	10	9	9	7
KD 5-3I ORB	$500.00	78	10	9	9	7
KD 5-3I PS	$500.00	78	10	9	9	7
KD 5-3I SB	$500.00	78	10	9	9	7
KD 5-3I SS	$415.00	78	10	9	9	7
KD 5-3P BK	$500.00	78	5	9	9	7
KD 5-3P ORB	$500.00	78	5	9	9	7
KD 5-3P PS	$500.00	78	5	9	9	7
KD 5-3P SB	$500.00	78	5	9	9	7
KD 5-3P SS	$415.00	78	5	9	9	7
KDB 4-A BK	$445.00	77	6	7	7	13
KDB 4-A ORB	$445.00	77	6	7	7	13
KDB 4-A PS	$445.00	77	6	7	7	13
KDB 4-A SB	$445.00	77	6	7	7	13
KDB 4-A SS	$365.00	77	6	7	7	13
KDB 4-P BK	$445.00	77	6	7	7	13
KDB 4-P ORB	$445.00	77	6	7	7	13
KDB 4-P PS	$445.00	77	6	7	7	13

SKU	List Price	Page #	Shipping Dimensions (inches)			
			Lbs	L	W	H
KDB 4-P SB	$445.00	77	6	7	7	13
KDB 4-P SS	$365.00	77	6	7	7	13
KDB 4-S BK	$540.00	77	8	7	7	13
KDB 4-S ORB	$540.00	77	8	7	7	13
KDB 4-S PS	$540.00	77	8	7	7	13
KDB 4-S SB	$540.00	77	8	7	7	13
KDB 4-S SS	$460.00	77	8	7	7	13
KDB 5-A BK	$480.00	78	6	7	7	13
KDB 5-A ORB	$480.00	78	6	7	7	13
KDB 5-A PS	$480.00	78	6	7	7	13
KDB 5-A SB	$480.00	78	6	7	7	13
KDB 5-A SS	$395.00	78	6	7	7	13
KDB 5-P BK	$480.00	78	6	7	7	13
KDB 5-P ORB	$480.00	78	6	7	7	13
KDB 5-P PS	$480.00	78	6	7	7	13
KDB 5-P SB	$48.00	78	6	7	7	13
KDB 5-P SS	$395.00	78	6	7	7	13
KDB 5-S BK	$575.00	78	8	7	7	13
KDB 5-S ORB	$575.00	78	8	7	7	13
KDB 5-S PS	$575.00	78	8	7	7	13
KDB 5-S SB	$575.00	78	8	7	7	13
KDB 5-S SS	$490.00	78	8	7	7	13
KS 4 BK	$115.00	129	1	6	6	1
KS 4 ORB	$115.00	129	1	6	6	1
KS 4 PS	$115.00	129	1	6	6	1
KS 4 SB	$115.00	129	1	6	6	1
KS 4 SS	$85.00	129	1	6	6	1
KS 5 BK	$125.00	129	1	6	6	1
KS 5 ORB	$125.00	129	1	6	6	1
KS 5 PS	$125.00	129	1	6	6	1
KS 5 SB	$125.00	129	1	6	6	1
KS 5 SS	$95.00	129	1	6	6	1
LA 6524 BK	$230.00	124	2	30	7	7
LA 6524 ORB	$230.00	124	2	30	7	7
LA 6524 PS	$230.00	124	2	30	7	7
LA 6524 SB	$230.00	124	2	30	7	7
LA 6524 SS	$215.00	124	2	30	7	7
LA 6525 BK	$420.00	124	2	30	7	7
LA 6525 ORB	$420.00	124	2	30	7	7
LA 6525 PS	$420.00	124	2	30	7	7
LA 6525 SB	$420.00	124	2	30	7	7
LA 6525 SS	$400.00	124	2	30	7	7
LA 6532 BK	$305.00	124	4	37	7	7
LA 6532 ORB	$305.00	124	4	37	7	7

Price Sheet & Index

SKU	List Price	Page #	Shipping Dimensions (inches)			
			Lbs	L	W	H
LA 6532 PS	$305.00	124	4	37	7	7
LA 6532 SB	$305.00	124	4	37	7	7
LA 6532 SS	$290.00	124	4	37	7	7
LA 6536 BK	$365.00	124	4	41	7	7
LA 6536 ORB	$365.00	124	4	41	7	7
LA 6536 PS	$365.00	124	4	41	7	7
LA 6536 SB	$365.00	124	4	41	7	7
LA 6536 SS	$345.00	124	4	41	7	7
LA 6542 BK	$395.00	124	5	47	7	7
LA 6542 ORB	$395.00	124	5	47	7	7
LA 6542 PS	$395.00	124	5	47	7	7
LA 6542 SB	$395.00	124	5	47	7	7
LA 6542 SS	$375.00	124	5	47	7	7
LA 6548 BK	$475.00	124	6	53	7	7
LA 6548 ORB	$475.00	124	6	53	7	7
LA 6548 PS	$475.00	124	6	53	7	7
LA 6548 SB	$475.00	124	6	53	7	7
LA 6548 SS	$455.00	124	6	53	7	7
LA 6558 BK	$400.00	124	6	65	7	7
LA 6558 ORB	$400.00	124	6	65	7	7
LA 6558 PS	$400.00	124	6	65	7	7
LA 6558 SB	$400.00	124	6	65	7	7
LA 6558 SS	$420.00	124	6	65	7	7
LA 6560 BK	$520.00	124	6	65	7	7
LA 6560 ORB	$595.00	124	6	65	7	7
LA 6560 PS	$595.00	124	6	65	7	7
LA 6560 SB	$595.00	124	6	65	7	7
LA 6560 SS	$570.00	124	6	65	7	7
LC 6528 BK	$260.00	124	4	30	7	7
LC 6528 ORB	$260.00	124	4	30	7	7
LC 6528 PS	$260.00	119	4	30	7	7
LC 6528 SB	$260.00	119	4	30	7	7
LC 6528 SS	$225.00	119	4	30	7	7
LC 6540 BK	$335.00	119	5	47	7	7
LC 6540 ORB	$335.00	119	5	47	7	7
LC 6540 PS	$335.00	119	5	47	7	7
LC 6540 SB	$335.00	119	5	47	7	7
LC 6540 SS	$275.00	119	5	47	7	7
LC 6552 BK	$365.00	119	6	65	7	7
LC 6552 ORB	$365.00	119	6	65	7	7
LC 6552 PS	$365.00	119	6	65	7	7
LC 6552 SB	$365.00	119	6	65	7	7
LC 6552 SS	$345.00	119	6	65	7	7
LC 6564 BK	$640.00	119	7	70	7	7

SKU	List Price	Page #	Shipping Dimensions (inches)			
			Lbs	L	W	H
LC 6564 ORB	$640.00	119	7	70	7	7
LC 6564 PS	$640.00	119	7	70	7	7
LC 6564 SB	$640.00	119	7	70	7	7
LC 6564 SS	$540.00	119	7	70	7	7
LC 6588 BK	$680.00	119	11	94	7	7
LC 6588 ORB	$680.00	119	11	94	7	7
LC 6588 PS	$680.00	119	11	94	7	7
LC 6588 SB	$680.00	119	11	94	7	7
LC 6588 SS	$560.00	119	11	94	7	7
LF 65 BK	$105.00	119	1	7	7	4
LF 65 ORB	$105.00	119	1	7	7	4
LF 65 PS	$105.00	119	1	7	7	4
LF 65 SB	$105.00	119	1	7	7	4
LF 65 SS	$95.00	119	1	7	7	4
LF 99 BK	$310.00	119	2	7	7	4
LF 99 ORB	$310.00	119	2	7	7	4
LF 99 PS	$310.00	119	2	7	7	4
LF 99 SB	$310.00	119	2	7	7	4
LF 99 SS	$300.00	119	2	7	7	4
LT5-2 BK	$145.00	65	1	7	7	4
LT5-2 BK C24	$3,480.00	65	25	30	15	15
LT5-2 ORB	$145.00	65	1	7	7	4
LT5-2 ORB C24	$3,480.00	65	25	30	15	15
LT5-2 PS	$145.00	65	1	7	7	4
LT5-2 PS C24	$3,480.00	65	25	30	15	15
LT5-2 SB	$145.00	65	1	7	7	4
LT5-2 SB C24	$3,480.00	65	25	30	15	15
LT5-2 SS	$95.00	65	1	7	7	4
LT5-2 SS C24	$2,280.00	65	25	30	15	15
LTD5 BA BK	$245.00	65	3	13	13	7
LTD5 BA ORB	$245.00	65	3	13	13	7
LTD5 BA PS	$245.00	65	3	13	13	7
LTD5 BA SB	$245.00	65	3	13	13	7
LTD5 BA SS	$195.00	65	3	13	13	7
LTD5 BP BK	$245.00	65	3	13	13	7
LTD5 BP ORB	$245.00	65	3	13	13	7
LTD5 BP PS	$245.00	65	3	13	13	7
LTD5 BP SB	$245.00	65	3	13	13	7
LTD5 BP SS	$195.00	65	3	13	13	7
LTD5 BS BK	$340.00	65	5	13	13	7
LTD5 BS ORB	$340.00	65	5	13	13	7
LTD5 BS PS	$340.00	65	5	13	13	7
LTD5 BS SB	$340.00	65	5	13	13	7
LTD5 BS SS	$290.00	65	5	13	13	7

Price Sheet & Index

SKU	List Price	Page #	Shipping Dimensions (inches)			
			Lbs	L	W	H
LTD5-2A BK	$195.00	65	2	6	6	6
LTD5-2A ORB	$195.00	65	2	6	6	6
LTD5-2A PS	$195.00	65	2	6	6	6
LTD5-2A SB	$195.00	65	2	6	6	6
LTD5-2A SS	$145.00	65	2	6	6	6
LTD5-2H BK	$210.00	65	5	6	6	6
LTD5-2H ORB	$210.00	65	5	6	6	6
LTD5-2H PS	$210.00	65	5	6	6	6
LTD5-2H SB	$210.00	65	5	6	6	6
LTD5-2H SS	$160.00	65	5	6	6	6
LTD5-2I BK	$210.00	65	5	6	6	6
LTD5-2I ORB	$210.00	65	5	6	6	6
LTD5-2I PS	$210.00	65	5	6	6	6
LTD5-2I SB	$210.00	65	5	6	6	6
LTD5-2I SS	$160.00	65	5	6	6	6
LTD5-2P BK	$195.00	65	2	6	6	6
LTD5-2P ORB	$195.00	65	2	6	6	6
LTD5-2P PS	$195.00	65	2	6	6	6
LTD5-2P SB	$195.00	65	2	6	6	6
LTD5-2P SS	$145.00	65	2	6	6	6
M 4 BK	$345.00	75	2	6	6	3
M 4 ORB	$345.00	75	2	6	6	3
M 4 PS	$345.00	75	2	6	6	3
M 4 SB	$345.00	75	2	6	6	3
M 4 SS	$265.00	75	2	6	6	3
M 5 BK	$380.00	76	2	6	6	3
M 5 ORB	$380.00	76	2	6	6	3
M 5 PS	$380.00	76	2	6	6	3
M 5 SB	$380.00	76	2	6	6	3
M 5 SS	$295.00	76	2	6	6	3
MA 6532 BK	$435.00	124	5	41	7	7
MA 6532 ORB	$435.00	124	5	41	7	7
MA 6532 PS	$435.00	124	5	41	7	7
MA 6532 SB	$435.00	124	5	41	7	7
MA 6532 SS	$285.00	124	5	41	7	7
MA 6536 BK	$470.00	124	5	41	7	7
MA 6536 ORB	$470.00	124	5	41	7	7
MA 6536 PS	$470.00	124	5	41	7	7
MA 6536 SB	$470.00	124	5	41	7	7
MA 6536 SS	$320.00	124	5	41	7	7
MA 6542 BK	$525.00	124	6	47	7	7
MA 6542 ORB	$525.00	124	6	47	7	7
MA 6542 PS	$525.00	124	6	47	7	7
MA 6542 SB	$525.00	124	6	47	7	7

SKU	List Price	Page #	Shipping Dimensions (inches)			
			Lbs	L	W	H
MA 6542 SS	$375.00	124	6	47	7	7
MA 6548 BK	$605.00	124	6	53	7	7
MA 6548 ORB	$605.00	124	6	53	7	7
MA 6548 PS	$605.00	124	6	53	7	7
MA 6548 SB	$605.00	124	6	53	7	7
MA 6548 SS	$425.00	124	6	53	7	7
MA 6560 BK	$755.00	124	7	65	7	7
MA 6560 ORB	$755.00	124	7	65	7	7
MA 6560 PS	$755.00	124	7	65	7	7
MA 6560 SB	$755.00	124	7	65	7	7
MA 6560 SS	$605.00	124	7	65	7	7
MD 4-2A BK	$395.00	75	3	5	5	5
MD 4-2A ORB	$395.00	75	3	5	5	5
MD 4-2A PS	$395.00	75	3	5	5	5
MD 4-2A SB	$395.00	75	3	5	5	5
MD 4-2A SS	$315.00	75	3	5	5	5
MD 4-2H BK	$410.00	75	5	5	5	5
MD 4-2H ORB	$410.00	75	5	5	5	5
MD 4-2H PS	$410.00	75	5	5	5	5
MD 4-2H SB	$410.00	75	5	5	5	5
MD 4-2H SS	$330.00	75	5	5	5	5
MD 4-2I BK	$410.00	75	5	5	5	5
MD 4-2I ORB	$410.00	75	5	5	5	5
MD 4-2I PS	$410.00	75	5	5	5	5
MD 4-2I SB	$410.00	75	5	5	5	5
MD 4-2I SS	$330.00	75	5	5	5	5
MD 4-2P BK	$395.00	75	3	5	5	5
MD 4-2P ORB	$395.00	75	3	5	5	5
MD 4-2P PS	$395.00	75	3	5	5	5
MD 4-2P SB	$395.00	75	3	5	5	5
MD 4-2P SS	$315.00	75	3	5	5	5
MD 5-2A BK	$430.00	76	3	6	6	6
MD 5-2A ORB	$430.00	76	3	6	6	6
MD 5-2A PS	$430.00	76	3	6	6	6
MD 5-2A SB	$430.00	76	3	6	6	6
MD 5-2A SS	$345.00	76	3	6	6	6
MD 5-2H BK	$445.00	76	6	6	6	6
MD 5-2H ORB	$445.00	76	6	6	6	6
MD 5-2H PS	$445.00	76	6	6	6	6
MD 5-2H SB	$445.00	76	6	6	6	6
MD 5-2H SS	$360.00	76	6	6	6	6
MD 5-2I BK	$445.00	76	6	6	6	6
MD 5-2I ORB	$445.00	76	6	6	6	6
MD 5-2I PS	$445.00	76	6	6	6	6

Price Sheet & Index

SKU	List Price	Page #	Shipping Dimensions (inches)			
			Lbs	L	W	H
MD 5-2I SB	$445.00	76	6	6	6	6
MD 5-2I SS	$360.00	76	6	6	6	6
MD 5-2P BK	$430.00	76	3	6	6	6
MD 5-2P ORB	$430.00	76	3	6	6	6
MD 5-2P PS	$430.00	76	3	6	6	6
MD 5-2P SB	$430.00	76	3	6	6	6
MD 5-2P SS	$345.00	76	3	6	6	6
MD 5-3A BK	$500.00	76	5	9	9	7
MD 5-3A ORB	$500.00	76	5	9	9	7
MD 5-3A PS	$500.00	76	5	9	9	7
MD 5-3A SB	$500.00	76	5	9	9	7
MD 5-3A SS	$415.00	76	5	9	9	7
MD 5-3I BK	$500.00	76	10	9	9	7
MD 5-3I ORB	$500.00	76	10	9	9	7
MD 5-3I PS	$500.00	76	10	9	9	7
MD 5-3I SB	$500.00	76	10	9	9	7
MD 5-3I SS	$415.00	76	10	9	9	7
MD 5-3P BK	$500.00	76	5	9	9	7
MD 5-3P ORB	$500.00	76	5	9	9	7
MD 5-3P PS	$500.00	76	5	9	9	7
MD 5-3P SB	$500.00	76	5	9	9	7
MD 5-3P SS	$415.00	76	5	9	9	7
MDB 4-A BK	$445.00	75	6	7	7	13
MDB 4-A ORB	$445.00	75	6	7	7	13
MDB 4-A PS	$445.00	75	6	7	7	13
MDB 4-A SB	$445.00	75	6	7	7	13
MDB 4-A SS	$365.00	75	6	7	7	13
MDB 4-P BK	$445.00	75	6	7	7	13
MDB 4-P ORB	$445.00	75	6	7	7	13
MDB 4-P PS	$445.00	75	6	7	7	13
MDB 4-P SB	$445.00	75	6	7	7	13
MDB 4-P SS	$365.00	75	6	7	7	13
MDB 4-S BK	$540.00	75	8	7	7	13
MDB 4-S ORB	$540.00	75	8	7	7	13
MDB 4-S PS	$540.00	75	8	7	7	13
MDB 4-S SB	$540.00	75	8	7	7	13
MDB 4-S SS	$460.00	75	8	7	7	13
MDB 5-A BK	$480.00	76	6	7	7	13
MDB 5-A ORB	$480.00	76	6	7	7	13
MDB 5-A PS	$480.00	76	6	7	7	13
MDB 5-A SB	$480.00	76	6	7	7	13
MDB 5-A SS	$395.00	76	6	7	7	13
MDB 5-P BK	$480.00	76	6	7	7	13
MDB 5-P ORB	$480.00	76	6	7	7	13

SKU	List Price	Page #	Shipping Dimensions (inches)			
			Lbs	L	W	H
MDB 5-P PS	$480.00	76	6	7	7	13
MDB 5-P SB	$480.00	76	6	7	7	13
MDB 5-P SS	$395.00	76	6	7	7	13
MDB 5-S BK	$575.00	76	8	7	7	13
MDB 5-S ORB	$575.00	76	8	7	7	13
MDB 5-S PS	$575.00	76	8	7	7	13
MDB 5-S SB	$575.00	76	8	7	7	13
MDB 5-S SS	$490.00	76	8	7	7	13
ME 96 BK	$85.00	76	6	102	7	7
ME 96 ORB	$85.00	140	6	102	7	7
ME 96 PS	$85.00	140	6	102	7	7
ME 96 SB	$85.00	140	6	102	7	7
ME 96 SS	$75.00	140	6	102	7	7
MG 4	$10.00	129	1	1	6	6
MG 5	$10.00	130	1	1	6	6
MS 4 BK	$115.00	129	1	6	6	1
MS 4 ORB	$115.00	129	1	6	6	1
MS 4 PS	$115.00	129	1	6	6	1
MS 4 SB	$115.00	129	1	6	6	1
MS 4 SS	$85.00	129	1	6	6	1
MS 5 BK	$125.00	130	1	6	6	1
MS 5 ORB	$125.00	130	1	6	6	1
MS 5 PS	$125.00	130	1	6	6	1
MS 5 SB	$125.00	130	1	6	6	1
MS 5 SS	$95.00	130	1	6	6	1
N 4 BK	$345.00	83	2	7	7	7
N 4 ORB	$345.00	83	2	7	7	7
N 4 PS	$345.00	83	2	7	7	7
N 4 SB	$345.00	83	2	7	7	7
N 4 SS	$265.00	83	2	7	7	7
N 5 BK	$380.00	84	2	7	7	7
N 5 ORB	$380.00	84	2	7	7	7
N 5 PS	$380.00	84	2	7	7	7
N 5 SB	$380.00	84	2	7	7	7
N 5 SS	$295.00	84	2	7	7	7
NA 6524 SS	$145.00	133	2	30	7	7
NA 6530 SS	$160.00	133	3	37	7	7
NA 6532 SS	$165.00	133	4	37	7	7
NA 6536 SS	$175.00	133	4	41	7	7
NA 6542 SS	$185.00	133	5	47	7	7
NA 6548 SS	$200.00	133	6	53	7	7
NA 6554 SS	$220.00	133	6	65	7	7
NA 6560 SS	$240.00	133	6	65	7	7
ND 4-2A BK	$395.00	83	3	5	5	5

Price Sheet & Index

SKU	List Price	Page #	Shipping Dimensions (inches)			
			Lbs	L	W	H
ND 4-2A ORB	$395.00	83	3	5	5	5
ND 4-2A PS	$395.00	83	3	5	5	5
ND 4-2A SB	$395.00	83	3	5	5	5
ND 4-2A SS	$315.00	83	3	5	5	5
ND 4-2H BK	$410.00	83	5	5	5	5
ND 4-2H ORB	$410.00	83	5	5	5	5
ND 4-2H PS	$410.00	83	5	5	5	5
ND 4-2H SB	$410.00	83	5	5	5	5
ND 4-2H SS	$330.00	83	5	5	5	5
ND 4-2I BK	$410.00	83	5	5	5	5
ND 4-2I ORB	$410.00	83	5	5	5	5
ND 4-2I PS	$410.00	83	5	5	5	5
ND 4-2I SB	$410.00	83	5	5	5	5
ND 4-2I SS	$330.00	83	5	5	5	5
ND 4-2P BK	$395.00	83	3	5	5	5
ND 4-2P ORB	$395.00	83	3	5	5	5
ND 4-2P PS	$395.00	83	3	5	5	5
ND 4-2P SB	$395.00	83	3	5	5	5
ND 4-2P SS	$315.00	83	3	5	5	5
ND 5-2A BK	$430.00	84	3	6	6	6
ND 5-2A ORB	$430.00	84	3	6	6	6
ND 5-2A PS	$430.00	84	3	6	6	6
ND 5-2A SB	$430.00	84	3	6	6	6
ND 5-2A SS	$345.00	84	3	6	6	6
ND 5-2H BK	$445.00	84	6	6	6	6
ND 5-2H ORB	$445.00	84	6	6	6	6
ND 5-2H PS	$445.00	84	6	6	6	6
ND 5-2H SB	$445.00	84	6	6	6	6
ND 5-2H SS	$360.00	84	6	6	6	6
ND 5-2I BK	$445.00	84	6	6	6	6
ND 5-2I ORB	$445.00	84	6	6	6	6
ND 5-2I PS	$445.00	84	6	6	6	6
ND 5-2I SB	$445.00	84	6	6	6	6
ND 5-2I SS	$360.00	84	6	6	6	6
ND 5-2P BK	$430.00	84	3	6	6	6
ND 5-2P ORB	$430.00	84	3	6	6	6
ND 5-2P PS	$430.00	84	3	6	6	6
ND 5-2P SB	$430.00	84	3	6	6	6
ND 5-2P SS	$345.00	84	3	6	6	6
ND 5-3A BK	$500.00	84	5	9	9	7
ND 5-3A ORB	$500.00	84	5	9	9	7
ND 5-3A PS	$500.00	84	5	9	9	7
ND 5-3A SB	$500.00	84	5	9	9	7
ND 5-3A SS	$415.00	84	5	9	9	7

SKU	List Price	Page #	Shipping Dimensions (inches)			
			Lbs	L	W	H
ND 5-3I BK	$500.00	84	10	9	9	7
ND 5-3I ORB	$500.00	84	10	9	9	7
ND 5-3I PS	$500.00	84	10	9	9	7
ND 5-3I SB	$500.00	84	10	9	9	7
ND 5-3I SS	$415.00	84	10	9	9	7
ND 5-3P BK	$500.00	84	5	9	9	7
ND 5-3P ORB	$500.00	84	5	9	9	7
ND 5-3P PS	$500.00	84	5	9	9	7
ND 5-3P SB	$500.00	84	5	9	9	7
ND 5-3P SS	$415.00	84	5	9	9	7
NDB 4-A BK	$445.00	83	6	7	7	13
NDB 4-A ORB	$445.00	83	6	7	7	13
NDB 4-A PS	$445.00	83	6	7	7	13
NDB 4-A SB	$445.00	83	6	7	7	13
NDB 4-A SS	$365.00	83	6	7	7	13
NDB 4-P BK	$445.00	83	6	7	7	13
NDB 4-P ORB	$445.00	83	6	7	7	13
NDB 4-P PS	$445.00	83	6	7	7	13
NDB 4-P SB	$445.00	83	6	7	7	13
NDB 4-P SS	$365.00	83	6	7	7	13
NDB 4-S BK	$540.00	83	8	7	7	13
NDB 4-S ORB	$540.00	83	8	7	7	13
NDB 4-S PS	$540.00	83	8	7	7	13
NDB 4-S SB	$540.00	83	8	7	7	13
NDB 4-S SS	$460.00	83	8	7	7	13
NDB 5-A BK	$480.00	84	6	7	7	13
NDB 5-A ORB	$480.00	84	6	7	7	13
NDB 5-A PS	$480.00	84	6	7	7	13
NDB 5-A SB	$480.00	84	6	7	7	13
NDB 5-A SS	$395.00	84	6	7	7	13
NDB 5-P BK	$480.00	84	6	7	7	13
NDB 5-P ORB	$480.00	84	6	7	7	13
NDB 5-P PS	$480.00	84	6	7	7	13
NDB 5-P SB	$480.00	84	6	7	7	13
NDB 5-P SS	$395.00	84	6	7	7	13
NDB 5-S BK	$575.00	84	8	7	7	13
NDB 5-S ORB	$575.00	84	8	7	7	13
NDB 5-S PS	$575.00	84	8	7	7	13
NDB 5-S SB	$575.00	84	8	7	7	13
NDB 5-S SS	$490.00	84	8	7	7	13
NS 4 BK	$115.00	129	1	6	6	1
NS 4 ORB	$115.00	129	1	6	6	1
NS 4 PS	$115.00	129	1	6	6	1
NS 4 SB	$115.00	129	1	6	6	1

Price Sheet & Index

SKU	List Price	Page #	Shipping Dimensions (inches)			
			Lbs	L	W	H
NS 4 SS	$85.00	129	1	6	6	1
NS 5 BK	$125.00	130	1	6	6	1
NS 5 ORB	$125.00	130	1	6	6	1
NS 5 PS	$125.00	130	1	6	6	1
NS 5 SB	$125.00	130	1	6	6	1
NS 5 SS	$95.00	130	1	6	6	1
OC 6524 SS	$340.00	123	4	30	7	7
OC 6532 SS	$470.00	123	5	37	7	7
OC 6536 SS	$475.00	123	6	41	7	7
OC 6542 SS	$515.00	123	7	47	7	7
OC 6548 SS	$530.00	123	8	53	7	7
OC 6560 SS	$620.00	123	9	65	7	7
OCH 6524 SS	$485.00	123	4	30	7	7
OCH 6532 SS	$585.00	123	5	37	7	7
OCH 6536 SS	$615.00	123	6	41	7	7
OCH 6542 SS	$625.00	123	7	47	7	7
OCH 6548 SS	$640.00	123	8	53	7	7
OCH 6560 SS	$730.00	123	9	65	7	7
Q 4 BK	$345.00	71	2	7	7	7
Q 4 ORB	$345.00	71	2	7	7	7
Q 4 PS	$345.00	71	2	7	7	7
Q 4 SB	$345.00	71	2	7	7	7
Q 4 SS	$265.00	71	2	7	7	7
Q 5 BK	$380.00	72	2	7	7	7
Q 5 ORB	$380.00	72	2	7	7	7
Q 5 PS	$380.00	72	2	7	7	7
Q 5 SB	$380.00	72	2	7	7	7
Q 5 SS	$295.00	72	2	7	7	7
QA 6524 PS	$115.00	133	4	30	7	7
QA 6524 SS	$95.00	133	4	30	7	7
QA 6530 PS	$130.00	133	4	37	7	7
QA 6530 SS	$110.00	133	4	37	7	7
QA 6532 PS	$135.00	133	4	37	7	7
QA 6532 SS	$115.00	133	4	37	7	7
QA 6536 PS	$145.00	133	4	41	7	7
QA 6536 SS	$125.00	133	4	41	7	7
QA 6542 PS	$155.00	133	5	47	7	7
QA 6542 SS	$135.00	133	5	47	7	7
QA 6548 PS	$170.00	133	5	53	7	7
QA 6548 SS	$150.00	133	5	53	7	7
QA 6554 PS	$190.00	133	6	65	7	7
QA 6554 SS	$170.00	133	6	65	7	7
QA 6560 PS	$210.00	133	6	65	7	7
QA 6560 SS	$190.00	133	6	65	7	7

SKU	List Price	Page #	Shipping Dimensions (inches)			
			Lbs	L	W	H
QD 4-2A BK	$395.00	71	3	5	5	5
QD 4-2A ORB	$395.00	71	3	5	5	5
QD 4-2A PS	$395.00	71	3	5	5	5
QD 4-2A SB	$395.00	71	3	5	5	5
QD 4-2A SS	$315.00	71	3	5	5	5
QD 4-2H BK	$410.00	71	5	5	5	5
QD 4-2H ORB	$410.00	71	5	5	5	5
QD 4-2H PS	$410.00	71	5	5	5	5
QD 4-2H SB	$410.00	71	5	5	5	5
QD 4-2H SS	$330.00	71	5	5	5	5
QD 4-2I BK	$410.00	71	5	5	5	5
QD 4-2I ORB	$410.00	71	5	5	5	5
QD 4-2I PS	$410.00	71	5	5	5	5
QD 4-2I SB	$410.00	71	5	5	5	5
QD 4-2I SS	$330.00	71	5	5	5	5
QD 4-2P BK	$395.00	71	3	5	5	5
QD 4-2P ORB	$395.00	71	3	5	5	5
QD 4-2P PS	$395.00	71	3	5	5	5
QD 4-2P SB	$395.00	71	3	5	5	5
QD 4-2P SS	$315.00	71	3	5	5	5
QD 5-2A BK	$430.00	72	3	6	6	6
QD 5-2A ORB	$430.00	72	3	6	6	6
QD 5-2A PS	$430.00	72	3	6	6	6
QD 5-2A SB	$430.00	72	3	6	6	6
QD 5-2A SS	$345.00	72	3	6	6	6
QD 5-2H BK	$445.00	72	6	6	6	6
QD 5-2H ORB	$445.00	72	6	6	6	6
QD 5-2H PS	$445.00	72	6	6	6	6
QD 5-2H SB	$445.00	72	6	6	6	6
QD 5-2H SS	$360.00	72	6	6	6	6
QD 5-2I BK	$445.00	72	6	6	6	6
QD 5-2I ORB	$445.00	72	6	6	6	6
QD 5-2I PS	$445.00	72	6	6	6	6
QD 5-2I SB	$445.00	72	6	6	6	6
QD 5-2I SS	$360.00	72	6	6	6	6
QD 5-2P BK	$430.00	72	3	6	6	6
QD 5-2P ORB	$430.00	72	3	6	6	6
QD 5-2P PS	$430.00	72	3	6	6	6
QD 5-2P SB	$430.00	72	3	6	6	6
QD 5-2P SS	$345.00	72	3	6	6	6
QD 5-3A BK	$500.00	72	5	9	9	7
QD 5-3A ORB	$500.00	72	5	9	9	7
QD 5-3A PS	$500.00	72	5	9	9	7
QD 5-3A SB	$500.00	72	5	9	9	7

Price Sheet & Index

SKU	List Price	Page #	Shipping Dimensions (inches)			
			Lbs	L	W	H
QD 5-3A SS	$415.00	72	5	9	9	7
QD 5-3I BK	$500.00	72	10	9	9	7
QD 5-3I ORB	$500.00	72	10	9	9	7
QD 5-3I PS	$500.00	72	10	9	9	7
QD 5-3I SB	$500.00	72	10	9	9	7
QD 5-3I SS	$415.00	72	10	9	9	7
QD 5-3P BK	$500.00	72	5	9	9	7
QD 5-3P ORB	$500.00	72	5	9	9	7
QD 5-3P PS	$500.00	72	5	9	9	7
QD 5-3P SB	$500.00	72	5	9	9	7
QD 5-3P SS	$415.00	72	5	9	9	7
QDB 4-A BK	$445.00	71	6	7	7	13
QDB 4-A ORB	$445.00	71	6	7	7	13
QDB 4-A PS	$445.00	71	6	7	7	13
QDB 4-A SB	$445.00	71	6	7	7	13
QDB 4-A SS	$365.00	71	6	7	7	13
QDB 4-P BK	$445.00	71	6	7	7	13
QDB 4-P ORB	$445.00	71	6	7	7	13
QDB 4-P PS	$445.00	71	6	7	7	13
QDB 4-P SB	$445.00	71	6	7	7	13
QDB 4-P SS	$365.00	71	6	7	7	13
QDB 4-S BK	$540.00	71	8	7	7	13
QDB 4-S ORB	$540.00	71	8	7	7	13
QDB 4-S PS	$540.00	71	8	7	7	13
QDB 4-S SB	$540.00	71	8	7	7	13
QDB 4-S SS	$460.00	71	8	7	7	13
QDB 5-A BK	$480.00	72	6	7	7	13
QDB 5-A ORB	$480.00	72	6	7	7	13
QDB 5-A PS	$480.00	72	6	7	7	13
QDB 5-A SB	$480.00	72	6	7	7	13
QDB 5-A SS	$395.00	72	6	7	7	13
QDB 5-P BK	$480.00	72	6	7	7	13
QDB 5-P ORB	$480.00	72	6	7	7	13
QDB 5-P PS	$480.00	72	6	7	7	13
QDB 5-P SB	$480.00	72	6	7	7	13
QDB 5-P SS	$395.00	72	6	7	7	13
QDB 5-S BK	$575.00	72	8	7	7	13
QDB 5-S ORB	$575.00	72	8	7	7	13
QDB 5-S PS	$575.00	72	8	7	7	13
QDB 5-S SB	$575.00	72	8	7	7	13
QDB 5-S SS	$490.00	72	8	7	7	13
QS 4 BK	$115.00	72	1	6	6	1
QS 4 ORB	$115.00	129	1	6	6	1
QS 4 PS	$115.00	129	1	6	6	1

SKU	List Price	Page #	Shipping Dimensions (inches)			
			Lbs	L	W	H
QS 4 SB	$115.00	129	1	6	6	1
QS 4 SS	$85.00	129	1	6	6	1
QS 5 BK	$125.00	130	1	6	6	1
QS 5 ORB	$125.00	130	1	6	6	1
QS 5 PS	$125.00	130	1	6	6	1
QS 5 SB	$125.00	130	1	6	6	1
QS 5 SS	$95.00	130	1	6	6	1
R 52-BK	$235.00	131	2	7	7	7
R 52-ORB	$235.00	131	2	7	7	7
R 52-PS	$235.00	131	2	7	7	7
R 52-SB	$235.00	131	2	7	7	7
R 52-SS	$180.00	131	2	7	7	7
R 54-BK	$240.00	131	2	7	7	7
R 54-ORB	$240.00	131	2	7	7	7
R 54-PS	$240.00	131	2	7	7	7
R 54-SB	$240.00	131	2	7	7	7
R 54-SS	$185.00	131	2	7	7	7
R 6536 BK	$525.00		4	41	7	7
R 6536 ORB	$525.00		4	41	7	7
R 6536 PS	$525.00		4	41	7	7
R 6536 SB	$525.00		4	41	7	7
R 6536 SS	$495.00		4	41	7	7
R 6548 BK	$695.00		6	53	7	7
R 6548 ORB	$695.00		6	53	7	7
R 6548 PS	$695.00		6	53	7	7
R 6548 SB	$695.00		6	53	7	7
R 6548 SS	$655.00		6	53	7	7
R 6560 BK	$875.00		6	65	7	7
R 6560 ORB	$875.00		6	65	7	7
R 6560 PS	$875.00		6	65	7	7
R 6560 SB	$875.00		6	65	7	7
R 6560 SS	$835.00		6	65	7	7
RA 6536 BK	$585.00	116	4	41	7	7
RA 6536 ORB	$585.00	116	4	41	7	7
RA 6536 PS	$585.00	116	4	41	7	7
RA 6536 SB	$585.00	116	4	41	7	7
RA 6536 SS	$555.00	116	4	41	7	7
RA 6548 BK	$755.00	116	6	53	7	7
RA 6548 ORB	$755.00	116	6	53	7	7
RA 6548 PS	$755.00	116	6	53	7	7
RA 6548 SB	$755.00	116	6	53	7	7
RA 6548 SS	$715.00	116	6	53	7	7
RA 6560 BK	$935.00	116	6	65	7	7
RA 6560 ORB	$935.00	116	6	65	7	7

Price Sheet & Index

SKU	List Price	Page #	Shipping Dimensions (inches)			
			Lbs	L	W	H
RA 6560 PS	$935.00	116	6	65	7	7
RA 6560 SB	$935.00	116	6	65	7	7
RA 6560 SS	$895.00	116	6	65	7	7
RB 32	$95.00	139	1	4	4	4
RK 5 BK	$380.00	79	2	7	7	7
RK 5 ORB	$380.00	79	2	7	7	7
RK 5 PS	$380.00	79	2	7	7	7
RK 5 SB	$380.00	79	2	7	7	7
RK 5 SS	$295.00	79	2	7	7	7
RKD 5-2A BK	$430.00	79	3	6	6	6
RKD 5-2A ORB	$430.00	79	3	6	6	6
RKD 5-2A PS	$430.00	79	3	6	6	6
RKD 5-2A SB	$430.00	79	3	6	6	6
RKD 5-2A SS	$345.00	79	3	6	6	6
RKD 5-2H BK	$445.00	79	6	6	6	6
RKD 5-2H ORB	$445.00	79	6	6	6	6
RKD 5-2H PS	$445.00	79	6	6	6	6
RKD 5-2H SB	$445.00	79	6	6	6	6
RKD 5-2H SS	$360.00	79	6	6	6	6
RKD 5-2I BK	$445.00	79	6	6	6	6
RKD 5-2I ORB	$445.00	79	6	6	6	6
RKD 5-2I PS	$445.00	79	6	6	6	6
RKD 5-2I SB	$445.00	79	6	6	6	6
RKD 5-2I SS	$360.00	79	6	6	6	6
RKD 5-2P BK	$430.00	79	3	6	6	6
RKD 5-2P ORB	$430.00	79	3	6	6	6
RKD 5-2P PS	$430.00	79	3	6	6	6
RKD 5-2P SB	$430.00	79	3	6	6	6
RKD 5-2P SS	$345.00	79	3	6	6	6
RKD 5-3A BK	$500.00	79	5	9	9	7
RKD 5-3A ORB	$500.00	79	5	9	9	7
RKD 5-3A PS	$500.00	79	5	9	9	7
RKD 5-3A SB	$500.00	79	5	9	9	7
RKD 5-3A SS	$415.00	79	5	9	9	7
RKD 5-3I BK	$500.00	79	10	9	9	7
RKD 5-3I ORB	$500.00	79	10	9	9	7
RKD 5-3I PS	$500.00	79	10	9	9	7
RKD 5-3I SB	$500.00	79	10	9	9	7
RKD 5-3I SS	$415.00	79	10	9	9	7
RKD 5-3P BK	$500.00	79	5	9	9	7
RKD 5-3P ORB	$500.00	79	5	9	9	7
RKD 5-3P PS	$500.00	79	5	9	9	7
RKD 5-3P SB	$500.00	79	5	9	9	7
RKD 5-3P SS	$415.00	79	5	9	9	7

SKU	List Price	Page #	Shipping Dimensions (inches)			
			Lbs	L	W	H
RKDB 5-A BK	$480.00	79	6	7	7	13
RKDB 5-A ORB	$480.00	79	6	7	7	13
RKDB 5-A PS	$480.00	79	6	7	7	13
RKDB 5-A SB	$480.00	79	6	7	7	13
RKDB 5-A SS	$395.00	79	6	7	7	13
RKDB 5-P BK	$480.00	79	6	7	7	13
RKDB 5-P ORB	$480.00	79	6	7	7	13
RKDB 5-P PS	$480.00	79	6	7	7	13
RKDB 5-P SB	$480.00	79	6	7	7	13
RKDB 5-P SS	$395.00	79	6	7	7	13
RKDB 5-S BK	$575.00	79	8	7	7	13
RKDB 5-S ORB	$575.00	79	8	7	7	13
RKDB 5-S PS	$575.00	79	8	7	7	13
RKDB 5-S SB	$575.00	79	8	7	7	13
RKDB 5-S SS	$490.00	79	8	7	7	13
RKS 5 BK	$125.00	79	1	6	6	1
RKS 5 ORB	$125.00	79	1	6	6	1
RKS 5 PS	$125.00	79	1	6	6	1
RKS 5 SB	$125.00	79	1	6	6	1
RKS 5 SS	$95.00	79	1	6	6	1
RM 5 BK	$380.00	74	2	7	7	7
RM 5 ORB	$380.00	74	2	7	7	7
RM 5 PS	$380.00	74	2	7	7	7
RM 5 SB	$380.00	74	2	7	7	7
RM 5 SS	$295.00	74	2	7	7	7
RMD 5-2A BK	$430.00	74	3	6	6	6
RMD 5-2A ORB	$430.00	74	3	6	6	6
RMD 5-2A PS	$430.00	74	3	6	6	6
RMD 5-2A SB	$430.00	74	3	6	6	6
RMD 5-2A SS	$345.00	74	3	6	6	6
RMD 5-2H BK	$445.00	74	6	6	6	6
RMD 5-2H ORB	$445.00	74	6	6	6	6
RMD 5-2H PS	$445.00	74	6	6	6	6
RMD 5-2H SB	$445.00	74	6	6	6	6
RMD 5-2H SS	$360.00	74	6	6	6	6
RMD 5-2I BK	$445.00	74	6	6	6	6
RMD 5-2I ORB	$445.00	74	6	6	6	6
RMD 5-2I PS	$445.00	74	6	6	6	6
RMD 5-2I SB	$445.00	74	6	6	6	6
RMD 5-2I SS	$360.00	74	6	6	6	6
RMD 5-2P BK	$430.00	74	3	6	6	6
RMD 5-2P ORB	$430.00	74	3	6	6	6
RMD 5-2P PS	$430.00	74	3	6	6	6
RMD 5-2P SB	$430.00	74	3	6	6	6

Price Sheet & Index

SKU	List Price	Page #	Shipping Dimensions (inches)			
			Lbs	L	W	H
RMD 5-2P SS	$345.00	74	3	6	6	6
RMD 5-3A BK	$500.00	74	5	9	9	7
RMD 5-3A ORB	$500.00	74	5	9	9	7
RMD 5-3A PS	$500.00	74	5	9	9	7
RMD 5-3A SB	$500.00	74	5	9	9	7
RMD 5-3A SS	$415.00	74	5	9	9	7
RMD 5-3I BK	$500.00	74	10	9	9	7
RMD 5-3I ORB	$500.00	74	10	9	9	7
RMD 5-3I PS	$500.00	74	10	9	9	7
RMD 5-3I SB	$500.00	74	10	9	9	7
RMD 5-3I SS	$415.00	74	10	9	9	7
RMD 5-3P BK	$500.00	74	5	9	9	7
RMD 5-3P ORB	$500.00	74	5	9	9	7
RMD 5-3P PS	$500.00	74	5	9	9	7
RMD 5-3P SB	$500.00	74	5	9	9	7
RMD 5-3P SS	$415.00	74	5	9	9	7
RMDB 5-A BK	$480.00	74	6	7	7	13
RMDB 5-A ORB	$480.00	74	6	7	7	13
RMDB 5-A PS	$480.00	74	6	7	7	13
RMDB 5-A SB	$480.00	74	6	7	7	13
RMDB 5-A SS	$395.00	74	6	7	7	13
RMDB 5-P BK	$480.00	74	6	7	7	13
RMDB 5-P ORB	$480.00	74	6	7	7	13
RMDB 5-P PS	$480.00	74	6	7	7	13
RMDB 5-P SB	$480.00	74	6	7	7	13
RMDB 5-P SS	$395.00	74	6	7	7	13
RMDB 5-S BK	$575.00	74	8	7	7	13
RMDB 5-S ORB	$575.00	74	8	7	7	13
RMDB 5-S PS	$575.00	74	8	7	7	13
RMDB 5-S SB	$575.00	74	8	7	7	13
RMDB 5-S SS	$490.00	74	8	7	7	13
RMG 5	$10.00	131	1	6	6	1
RMS 5 BK	$125.00	131	1	6	6	1
RMS 5 ORB	$125.00	131	1	6	6	1
RMS 5 PS	$125.00	131	1	6	6	1
RMS 5 SB	$125.00	131	1	6	6	1
RMS 5 SS	$95.00	131	1	6	6	1
RN 5 BK	$380.00	85	2	7	7	7
RN 5 ORB	$380.00	85	2	7	7	7
RN 5 PS	$380.00	85	2	7	7	7
RN 5 SB	$380.00	85	2	7	7	7
RN 5 SS	$295.00	85	2	7	7	7
RND 5-2A BK	$430.00	85	3	6	6	6
RND 5-2A ORB	$430.00	85	3	6	6	6

SKU	List Price	Page #	Shipping Dimensions (inches)			
			Lbs	L	W	H
RND 5-2A PS	$430.00	85	3	6	6	6
RND 5-2A SB	$430.00	85	3	6	6	6
RND 5-2A SS	$345.00	85	3	6	6	6
RND 5-2H BK	$445.00	85	6	6	6	6
RND 5-2H ORB	$445.00	85	6	6	6	6
RND 5-2H PS	$445.00	85	6	6	6	6
RND 5-2H SB	$445.00	85	6	6	6	6
RND 5-2H SS	$360.00	85	6	6	6	6
RND 5-2I BK	$445.00	85	6	6	6	6
RND 5-2I ORB	$445.00	85	6	6	6	6
RND 5-2I PS	$445.00	85	6	6	6	6
RND 5-2I SB	$445.00	85	6	6	6	6
RND 5-2I SS	$360.00	85	6	6	6	6
RND 5-2P BK	$430.00	85	3	6	6	6
RND 5-2P ORB	$430.00	85	3	6	6	6
RND 5-2P PS	$430.00	85	3	6	6	6
RND 5-2P SB	$430.00	85	3	6	6	6
RND 5-2P SS	$345.00	85	3	6	6	6
RND 5-3A BK	$500.00	85	5	9	9	7
RND 5-3A ORB	$500.00	85	5	9	9	7
RND 5-3A PS	$500.00	85	5	9	9	7
RND 5-3A SB	$500.00	85	5	9	9	7
RND 5-3A SS	$415.00	85	5	9	9	7
RND 5-3I BK	$500.00	85	10	9	9	7
RND 5-3I ORB	$500.00	85	10	9	9	7
RND 5-3I PS	$500.00	85	10	9	9	7
RND 5-3I SB	$500.00	85	10	9	9	7
RND 5-3I SS	$415.00	85	10	9	9	7
RND 5-3P BK	$500.00	85	5	9	9	7
RND 5-3P ORB	$500.00	85	5	9	9	7
RND 5-3P PS	$500.00	85	5	9	9	7
RND 5-3P SB	$500.00	85	5	9	9	7
RND 5-3P SS	$415.00	85	5	9	9	7
RNDB 5-A BK	$480.00	85	6	7	7	13
RNDB 5-A ORB	$480.00	85	6	7	7	13
RNDB 5-A PS	$480.00	85	6	7	7	13
RNDB 5-A SB	$480.00	85	6	7	7	13
RNDB 5-A SS	$395.00	85	6	7	7	13
RNDB 5-P BK	$480.00	85	6	7	7	13
RNDB 5-P ORB	$480.00	85	6	7	7	13
RNDB 5-P PS	$480.00	85	6	7	7	13
RNDB 5-P SB	$480.00	85	6	7	7	13
RNDB 5-P SS	$395.00	85	6	7	7	13
RNDB 5-S BK	$575.00	85	8	7	7	13

Price Sheet & Index

SKU	List Price	Page #	Shipping Dimensions (inches)			
			Lbs	L	W	H
RNDB 5-S ORB	$575.00	85	8	7	7	13
RNDB 5-S PS	$575.00	85	8	7	7	13
RNDB 5-S SB	$575.00	85	8	7	7	13
RNDB 5-S SS	$490.00	85	8	7	7	13
RNS 5 BK	$125.00	131	1	6	6	1
RNS 5 ORB	$125.00	131	1	6	6	1
RNS 5 PS	$125.00	131	1	6	6	1
RNS 5 SB	$125.00	131	1	6	6	1
RNS 5 SS	$95.00	131	1	6	6	1
RQ 5 BK	$380.00	73	2	7	7	7
RQ 5 ORB	$380.00	73	2	7	7	7
RQ 5 PS	$380.00	73	2	7	7	7
RQ 5 SB	$380.00	73	2	7	7	7
RQ 5 SS	$295.00	73	2	7	7	7
RQD 5-2A BK	$430.00	73	3	6	6	6
RQD 5-2A ORB	$430.00	73	3	6	6	6
RQD 5-2A PS	$430.00	73	3	6	6	6
RQD 5-2A SB	$430.00	73	3	6	6	6
RQD 5-2A SS	$345.00	73	3	6	6	6
RQD 5-2H BK	$445.00	73	6	6	6	6
RQD 5-2H ORB	$445.00	73	6	6	6	6
RQD 5-2H PS	$445.00	73	6	6	6	6
RQD 5-2H SB	$445.00	73	6	6	6	6
RQD 5-2H SS	$360.00	73	6	6	6	6
RQD 5-2I BK	$445.00	73	6	6	6	6
RQD 5-2I ORB	$445.00	73	6	6	6	6
RQD 5-2I PS	$445.00	73	6	6	6	6
RQD 5-2I SB	$445.00	73	6	6	6	6
RQD 5-2I SS	$360.00	73	6	6	6	6
RQD 5-2P BK	$430.00	73	3	6	6	6
RQD 5-2P ORB	$430.00	73	3	6	6	6
RQD 5-2P PS	$430.00	73	3	6	6	6
RQD 5-2P SB	$430.00	73	3	6	6	6
RQD 5-2P SS	$345.00	73	3	6	6	6
RQD 5-3A BK	$500.00	73	5	9	9	7
RQD 5-3A ORB	$500.00	73	5	9	9	7
RQD 5-3A PS	$500.00	73	5	9	9	7
RQD 5-3A SB	$500.00	73	5	9	9	7
RQD 5-3A SS	$415.00	73	5	9	9	7
RQD 5-3I BK	$500.00	73	10	9	9	7
RQD 5-3I ORB	$500.00	73	10	9	9	7
RQD 5-3I PS	$500.00	73	10	9	9	7
RQD 5-3I SB	$500.00	73	10	9	9	7
RQD 5-3I SS	$415.00	73	10	9	9	7

SKU	List Price	Page #	Shipping Dimensions (inches)			
			Lbs	L	W	H
RQD 5-3P BK	$500.00	73	5	9	9	7
RQD 5-3P ORB	$500.00	73	5	9	9	7
RQD 5-3P PS	$500.00	73	5	9	9	7
RQD 5-3P SB	$500.00	73	5	9	9	7
RQD 5-3P SS	$415.00	73	5	9	9	7
RQDB 5-A BK	$480.00	73	6	7	7	13
RQDB 5-A ORB	$480.00	73	6	7	7	13
RQDB 5-A PS	$480.00	73	6	7	7	13
RQDB 5-A SB	$480.00	73	6	7	7	13
RQDB 5-A SS	$395.00	73	6	7	7	13
RQDB 5-P BK	$480.00	73	6	7	7	13
RQDB 5-P ORB	$480.00	73	6	7	7	13
RQDB 5-P PS	$480.00	73	6	7	7	13
RQDB 5-P SB	$480.00	73	6	7	7	13
RQDB 5-P SS	$395.00	73	6	7	7	13
RQDB 5-S BK	$575.00	73	8	7	7	13
RQDB 5-S ORB	$575.00	73	8	7	7	13
RQDB 5-S PS	$575.00	73	8	7	7	13
RQDB 5-S SB	$575.00	73	8	7	7	13
RQDB 5-S SS	$490.00	73	8	7	7	13
RQS 5 BK	$125.00	73	1	6	6	1
RQS 5 ORB	$125.00	73	1	6	6	1
RQS 5 PS	$125.00	73	1	6	6	1
RQS 5 SB	$125.00	73	1	6	6	1
RQS 5 SS	$95.00	73	1	6	6	1
RT 15 A BK	$675.00	68	3	7	7	4
RT 15 A ORB	$675.00	68	3	7	7	4
RT 15 A PS	$675.00	68	3	7	7	4
RT 15 A SB	$675.00	68	3	7	7	4
RT 15 A SS	$575.00	68	3	7	7	4
RT 15 B BK	$675.00	68	3	7	7	4
RT 15 B ORB	$675.00	68	3	7	7	4
RT 15 B PS	$675.00	68	3	7	7	4
RT 15 B SB	$675.00	68	3	7	7	4
RT 15 B SS	$575.00	68	3	7	7	4
RTD 15-2A BK	$790.00	68	5	9	9	7
RTD 15-2A ORB	$790.00	68	5	9	9	7
RTD 15-2A PS	$790.00	68	5	9	9	7
RTD 15-2A SB	$790.00	68	5	9	9	7
RTD 15-2A SS	$690.00	68	5	9	9	7
RTD 15-2I BK	$790.00	68	11	9	9	7
RTD 15-2I ORB	$790.00	68	11	9	9	7
RTD 15-2I PS	$790.00	68	11	9	9	7
RTD 15-2I SB	$790.00	68	11	9	9	7

Price Sheet & Index

SKU	List Price	Page #	Shipping Dimensions (inches)			
			Lbs	L	W	H
RTD 15-2I SS	$690.00	68	11	9	9	7
RTD 15-2P BK	$790.00	68	5	9	9	7
RTD 15-2P ORB	$790.00	68	5	9	9	7
RTD 15-2P PS	$790.00	68	5	9	9	7
RTD 15-2P SB	$790.00	68	5	9	9	7
RTD 15-2P SS	$690.00	68	5	9	9	7
RTD 15-3A BK	$800.00	68	6	9	9	7
RTD 15-3A ORB	$800.00	68	6	9	9	7
RTD 15-3A PS	$800.00	68	6	9	9	7
RTD 15-3A SB	$800.00	68	6	9	9	7
RTD 15-3A SS	$700.00	68	6	9	9	7
RTD 15-3I BK	$800.00	68	11	9	9	7
RTD 15-3I ORB	$800.00	68	11	9	9	7
RTD 15-3I PS	$800.00	68	11	9	9	7
RTD 15-3I SB	$800.00	68	11	9	9	7
RTD 15-3I SS	$700.00	68	11	9	9	7
RTD 15-3P BK	$800.00	68	6	9	9	7
RTD 15-3P ORB	$800.00	68	6	9	9	7
RTD 15-3P PS	$800.00	68	6	9	9	7
RTD 15-3P SB	$800.00	68	6	9	9	7
RTD 15-3P SS	$700.00	68	6	9	9	7
RTDB 15-A BK	$790.00	68	4	13	13	7
RTDB 15-A ORB	$790.00	68	4	13	13	7
RTDB 15-A PS	$790.00	68	4	13	13	7
RTDB 15-A SB	$790.00	68	4	13	13	7
RTDB 15-A SS	$690.00	68	4	13	13	7
RTDB 15-P BK	$790.00	68	4	13	13	7
RTDB 15-P ORB	$780.00	68	4	13	13	7
RTDB 15-P PS	$780.00	68	4	13	13	7
RTDB 15-P SB	$780.00	68	4	13	13	7
RTDB 15-P SS	$680.00	68	4	13	13	7
RTDB 15-S BK	$885.00	68	6	13	13	7
RTDB 15-S ORB	$885.00	68	6	13	13	7
RTDB 15-S PS	$885.00	68	6	13	13	7
RTDB 15-S SB	$885.00	68	6	13	13	7
RTDB 15-S SS	$785.00	68	6	13	13	7
RV 5 BK	$380.00	80	2	7	7	7
RV 5 ORB	$380.00	80	2	7	7	7
RV 5 PS	$380.00	80	2	7	7	7
RV 5 SB	$380.00	80	2	7	7	7
RV 5 SS	$295.00	80	2	7	7	7
RVD 5-2A BK	$430.00	80	3	6	6	6
RVD 5-2A ORB	$430.00	80	3	6	6	6
RVD 5-2A PS	$430.00	80	3	6	6	6

SKU	List Price	Page #	Shipping Dimensions (inches)			
			Lbs	L	W	H
RVD 5-2A SB	$430.00	80	3	6	6	6
RVD 5-2A SS	$345.00	80	3	6	6	6
RVD 5-2H BK	$445.00	80	6	6	6	6
RVD 5-2H ORB	$445.00	80	6	6	6	6
RVD 5-2H PS	$445.00	80	6	6	6	6
RVD 5-2H SB	$445.00	80	6	6	6	6
RVD 5-2H SS	$360.00	80	6	6	6	6
RVD 5-2I BK	$445.00	80	6	6	6	6
RVD 5-2I ORB	$445.00	80	6	6	6	6
RVD 5-2I PS	$445.00	80	6	6	6	6
RVD 5-2I SB	$445.00	80	6	6	6	6
RVD 5-2I SS	$360.00	80	6	6	6	6
RVD 5-2P BK	$430.00	80	3	6	6	6
RVD 5-2P ORB	$430.00	80	3	6	6	6
RVD 5-2P PS	$430.00	80	3	6	6	6
RVD 5-2P SB	$430.00	80	3	6	6	6
RVD 5-2P SS	$345.00	80	3	6	6	6
RVD 5-3A BK	$500.00	80	5	9	9	7
RVD 5-3A ORB	$500.00	80	5	9	9	7
RVD 5-3A PS	$500.00	80	5	9	9	7
RVD 5-3A SB	$500.00	80	5	9	9	7
RVD 5-3A SS	$415.00	80	5	9	9	7
RVD 5-3I BK	$500.00	80	10	9	9	7
RVD 5-3I ORB	$500.00	80	10	9	9	7
RVD 5-3I PS	$500.00	80	10	9	9	7
RVD 5-3I SB	$500.00	80	10	9	9	7
RVD 5-3I SS	$415.00	80	10	9	9	7
RVD 5-3P BK	$500.00	80	5	9	9	7
RVD 5-3P ORB	$500.00	80	5	9	9	7
RVD 5-3P PS	$500.00	80	5	9	9	7
RVD 5-3P SB	$500.00	80	5	9	9	7
RVD 5-3P SS	$415.00	80	5	9	9	7
RVDB 5-A BK	$480.00	80	6	7	7	13
RVDB 5-A ORB	$480.00	80	6	7	7	13
RVDB 5-A PS	$480.00	80	6	7	7	13
RVDB 5-A SB	$480.00	80	6	7	7	13
RVDB 5-A SS	$395.00	80	6	7	7	13
RVDB 5-P BK	$480.00	80	6	7	7	13
RVDB 5-P ORB	$480.00	80	6	7	7	13
RVDB 5-P PS	$480.00	80	6	7	7	13
RVDB 5-P SB	$480.00	80	6	7	7	13
RVDB 5-P SS	$395.00	80	6	7	7	13
RVDB 5-S BK	$575.00	80	8	7	7	13
RVDB 5-S ORB	$575.00	80	8	7	7	13

Price Sheet & Index

SKU	List Price	Page #	Shipping Dimensions (inches)			
			Lbs	L	W	H
RVDB 5-S PS	$575.00	80	8	7	7	13
RVDB 5-S SB	$575.00	80	8	7	7	13
RVDB 5-S SS	$490.00	80	8	7	7	13
RVS 5 BK	$125.00	131	1	6	6	1
RVS 5 ORB	$125.00	131	1	6	6	1
RVS 5 PS	$125.00	131	1	6	6	1
RVS 5 SB	$125.00	131	1	6	6	1
RVS 5 SS	$95.00	131	1	6	6	1
RW 5 BK	$425.00	86	2	7	7	7
RW 5 ORB	$425.00	86	2	7	7	7
RW 5 PS	$425.00	86	2	7	7	7
RW 5 SB	$425.00	86	2	7	7	7
RW 5 SS	$345.00	86	2	7	7	7
RWD 5-2A BK	$475.00	86	3	6	6	6
RWD 5-2A ORB	$475.00	86	3	6	6	6
RWD 5-2A PS	$475.00	86	3	6	6	6
RWD 5-2A SB	$475.00	86	3	6	6	6
RWD 5-2A SS	$395.00	86	3	6	6	6
RWD 5-2H BK	$490.00	86	6	6	6	6
RWD 5-2H ORB	$490.00	86	6	6	6	6
RWD 5-2H PS	$490.00	86	6	6	6	6
RWD 5-2H SB	$490.00	86	6	6	6	6
RWD 5-2H SS	$410.00	86	6	6	6	6
RWD 5-2I BK	$490.00	86	6	6	6	6
RWD 5-2I ORB	$490.00	86	6	6	6	6
RWD 5-2I PS	$490.00	86	6	6	6	6
RWD 5-2I SB	$490.00	86	6	6	6	6
RWD 5-2I SS	$410.00	86	6	6	6	6
RWD 5-2P BK	$475.00	86	3	6	6	6
RWD 5-2P ORB	$475.00	86	3	6	6	6
RWD 5-2P PS	$475.00	86	3	6	6	6
RWD 5-2P SB	$475.00	86	3	6	6	6
RWD 5-2P SS	$395.00	86	3	6	6	6
RWD 5-3A BK	$545.00	86	5	9	9	7
RWD 5-3A ORB	$545.00	86	5	9	9	7
RWD 5-3A PS	$545.00	86	5	9	9	7
RWD 5-3A SB	$545.00	86	5	9	9	7
RWD 5-3A SS	$465.00	86	5	9	9	7
RWD 5-3I BK	$545.00	86	10	9	9	7
RWD 5-3I ORB	$545.00	86	10	9	9	7
RWD 5-3I PS	$545.00	86	10	9	9	7
RWD 5-3I SB	$545.00	86	10	9	9	7
RWD 5-3I SS	$465.00	86	10	9	9	7
RWD 5-3P BK	$545.00	86	5	9	9	7

SKU	List Price	Page #	Shipping Dimensions (inches)			
			Lbs	L	W	H
RWD 5-3P ORB	$545.00	86	5	9	9	7
RWD 5-3P PS	$545.00	86	5	9	9	7
RWD 5-3P SB	$545.00	86	5	9	9	7
RWD 5-3P SS	$465.00	86	5	9	9	7
RWDB 5-A BK	$525.00	86	6	7	7	13
RWDB 5-A ORB	$525.00	86	6	7	7	13
RWDB 5-A PS	$525.00	86	6	7	7	13
RWDB 5-A SB	$525.00	86	6	7	7	13
RWDB 5-A SS	$445.00	86	6	7	7	13
RWDB 5-P BK	$525.00	86	6	7	7	13
RWDB 5-P ORB	$525.00	86	6	7	7	13
RWDB 5-P PS	$525.00	86	6	7	7	13
RWDB 5-P SB	$525.00	86	6	7	7	13
RWDB 5-P SS	$445.00	86	6	7	7	13
RWDB 5-S BK	$620.00	86	8	7	7	13
RWDB 5-S ORB	$620.00	86	8	7	7	13
RWDB 5-S PS	$620.00	86	8	7	7	13
RWDB 5-S SB	$620.00	86	8	7	7	13
RWDB 5-S SS	$540.00	86	8	7	7	13
RWS 5 BK	$195.00	131	1	6	6	1
RWS 5 ORB	$195.00	131	1	6	6	1
RWS 5 PS	$195.00	131	1	6	6	1
RWS 5 SB	$195.00	131	1	6	6	1
RWS 5 SS	$170.00	131	1	6	6	1
S 32	$10.00	113	1	4	4	4
S 50	$10.00	113	1	4	4	4
S 65	$10.00	115	1	4	4	4
SA 12532 BK	$1,095.00	127	8	37	7	7
SA 12532 ORB	$1,095.00	127	8	37	7	7
SA 12532 PS	$1,095.00	127	8	37	7	7
SA 12532 SB	$1,095.00	127	8	37	7	7
SA 12532 SS	$795.00	127	8	37	7	7
SA 12536 BK	$1,195.00	127	9	41	7	7
SA 12536 ORB	$1,195.00	127	9	41	7	7
SA 12536 PS	$1,195.00	127	9	41	7	7
SA 12536 SB	$1,195.00	127	9	41	7	7
SA 12536 SS	$895.00	127	9	41	7	7
SA 12542 BK	$1,245.00	127	11	47	7	7
SA 12542 ORB	$1,245.00	127	11	47	7	7
SA 12542 PS	$1,245.00	127	11	47	7	7
SA 12542 SB	$1,245.00	127	11	47	7	7
SA 12542 SS	$945.00	127	11	47	7	7
SA 12548 BK	$1,295.00	127	12	53	7	7
SA 12548 ORB	$1,295.00	127	12	53	7	7

Price Sheet & Index

SKU	List Price	Page #	Shipping Dimensions (inches)			
			Lbs	L	W	H
SA 12548 PS	$1,295.00	127	12	53	7	7
SA 12548 SB	$1,295.00	127	12	53	7	7
SA 12548 SS	$995.00	127	12	53	7	7
SA 12560 BK	$1,495.00	127	13	65	7	7
SA 12560 ORB	$1,495.00	127	13	65	7	7
SA 12560 PS	$1,495.00	127	13	65	7	7
SA 12560 SB	$1,495.00	127	13	65	7	7
SA 12560 SS	$1,195.00	127	13	65	7	7
SA 2532 BK	$645.00	124	4	37	7	7
SA 2532 ORB	$645.00	124	4	37	7	7
SA 2532 PS	$645.00	124	4	37	7	7
SA 2532 SB	$645.00	124	4	37	7	7
SA 2532 SS	$515.00	124	4	37	7	7
SA 2536 BK	$680.00	124	5	41	7	7
SA 2536 ORB	$680.00	124	5	41	7	7
SA 2536 PS	$680.00	124	5	41	7	7
SA 2536 SB	$680.00	124	5	41	7	7
SA 2536 SS	$550.00	124	5	41	7	7
SA 2542 BK	$800.00	124	6	47	7	7
SA 2542 ORB	$800.00	124	6	47	7	7
SA 2542 PS	$800.00	124	6	47	7	7
SA 2542 SB	$800.00	124	6	47	7	7
SA 2542 SS	$700.00	124	6	47	7	7
SA 2548 BK	$810.00	124	6	53	7	7
SA 2548 ORB	$810.00	124	6	53	7	7
SA 2548 PS	$810.00	124	6	53	7	7
SA 2548 SB	$810.00	124	6	53	7	7
SA 2548 SS	$710.00	124	6	53	7	7
SA 2560 BK	$975.00	124	7	65	7	7
SA 2560 ORB	$975.00	124	7	65	7	7
SA 2560 PS	$975.00	124	7	65	7	7
SA 2560 SB	$975.00	124	7	65	7	7
SA 2560 SS	$825.00	124	7	65	7	7
SA 3836 BK	$675.00	124	7	41	7	7
SA 3836 ORB	$675.00	114	7	41	7	7
SA 3836 PS	$675.00	114	7	41	7	7
SA 3836 SB	$675.00	114	7	41	7	7
SA 3836 SS	$515.00	114	7	41	7	7
SA 3848 BK	$715.00	114	8	53	7	7
SA 3848 ORB	$715.00	114	8	53	7	7
SA 3848 PS	$715.00	114	8	53	7	7
SA 3848 SB	$715.00	114	8	53	7	7
SA 3848 SS	$550.00	114	8	53	7	7
SA 3860 BK	$850.00	114	10	65	7	7

SKU	List Price	Page #	Shipping Dimensions (inches)			
			Lbs	L	W	H
SA 3860 ORB	$850.00	114	10	65	7	7
SA 3860 PS	$850.00	114	10	65	7	7
SA 3860 SB	$850.00	114	10	65	7	7
SA 3860 SS	$715.00	114	10	65	7	7
SA 3872 BK	$1,165.00	114	11	78	7	7
SA 3872 ORB	$1,165.00	114	11	78	7	7
SA 3872 PS	$1,165.00	114	11	78	7	7
SA 3872 SB	$1,165.00	114	11	78	7	7
SA 3872 SS	$860.00	114	11	78	7	7
SA 6525 BK	$940.00	116	5	37	7	7
SA 6525 ORB	$940.00	116	5	37	7	7
SA 6525 PS	$940.00	116	5	37	7	7
SA 6525 SB	$940.00	116	5	37	7	7
SA 6525 SS	$800.00	116	5	37	7	7
SA 6536 BK	$775.00	116	6	41	7	7
SA 6536 ORB	$775.00	116	6	41	7	7
SA 6536 PS	$775.00	116	6	41	7	7
SA 6536 SB	$775.00	116	6	41	7	7
SA 6536 SS	$610.00	116	6	41	7	7
SA 6548 BK	$905.00	116	7	53	7	7
SA 6548 ORB	$905.00	116	7	53	7	7
SA 6548 PS	$905.00	116	7	53	7	7
SA 6548 SB	$905.00	116	7	53	7	7
SA 6548 SS	$780.00	116	7	53	7	7
SA 6558 BK	$940.00	116	7	65	7	7
SA 6558 ORB	$940.00	116	7	65	7	7
SA 6558 PS	$940.00	116	7	65	7	7
SA 6558 SB	$940.00	116	7	65	7	7
SA 6558 SS	$800.00	116	7	65	7	7
SA 6560 BK	$1,085.00	116	8	65	7	7
SA 6560 ORB	$1,085.00	116	8	65	7	7
SA 6560 PS	$1,085.00	116	8	65	7	7
SA 6560 SB	$1,085.00	116	8	65	7	7
SA 6560 SS	$920.00	116	8	65	7	7
SA 6572 BK	$1,245.00	116	11	78	7	7
SA 6572 ORB	$1,245.00	116	11	78	7	7
SA 6572 PS	$1,295.00	116	11	78	7	7
SA 6572 SB	$1,295.00	116	11	78	7	7
SA 6572 SS	$1,035.00	116	11	78	7	7
SAG 10048 BK	$1,260.00	23	11	53	7	7
SAG 10048 ORB	$1,260.00	23	11	53	7	7
SAG 10048 PS	$1,260.00	23	11	53	7	7
SAG 10048 SB	$1,260.00	23	11	53	7	7
SAG 10048 SS	$965.00	23	11	53	7	7

Price Sheet & Index

SKU	List Price	Page #	Shipping Dimensions (inches)			
			Lbs	L	W	H
SAG 10096 BK	$2,515.00	23	17	53	7	7
SAG 10096 ORB	$2,515.00	23	17	53	7	7
SAG 10096 PS	$2,515.00	23	17	53	7	7
SAG 10096 SB	$2,515.00	23	17	53	7	7
SAG 10096 SS	$1,930.00	23	17	53	7	7
SAG 3836 BK	$780.00	13	9	41	7	7
SAG 3836 ORB	$780.00	13	9	41	7	7
SAG 3836 PS	$780.00	13	9	41	7	7
SAG 3836 SB	$780.00	13	9	41	7	7
SAG 3836 SS	$620.00	13	9	41	7	7
SAG 3848 BK	$840.00	13	11	53	7	7
SAG 3848 ORB	$840.00	13	11	53	7	7
SAG 3848 PS	$840.00	13	11	53	7	7
SAG 3848 SB	$840.00	13	11	53	7	7
SAG 3848 SS	$665.00	13	11	53	7	7
SAG 3860 BK	$1,000.00	13	14	65	7	7
SAG 3860 ORB	$1,000.00	13	14	65	7	7
SAG 3860 PS	$1,000.00	13	14	65	7	7
SAG 3860 SB	$1,000.00	13	14	65	7	7
SAG 3860 SS	$855.00	13	14	65	7	7
SAG 3872 BK	$1,375.00	13	17	78	7	7
SAG 3872 ORB	$1,375.00	13	17	78	7	7
SAG 3872 PS	$1,375.00	13	17	78	7	7
SAG 3872 SB	$1,375.00	13	17	78	7	7
SAG 3872 SS	$1,060.00	13	17	78	7	7
SAG 3896 BK	$1,660.00	13	23	102	7	7
SAG 3896 ORB	$1,660.00	13	23	102	7	7
SAG 3896 PS	$1,660.00	13	23	102	7	7
SAG 3896 SB	$1,660.00	13	23	102	7	7
SAG 3896 SS	$1,335.00	13	23	102	7	7
SAG 6536 BK	$1,020.00	15	9	41	7	7
SAG 6536 ORB	$1,020.00	15	9	41	7	7
SAG 6536 PS	$1,020.00	15	9	41	7	7
SAG 6536 SB	$1,020.00	15	9	41	7	7
SAG 6536 SS	$855.00	15	9	41	7	7
SAG 6548 BK	$1,075.00	15	11	53	7	7
SAG 6548 ORB	$1,075.00	15	11	53	7	7
SAG 6548 PS	$1,075.00	15	11	53	7	7
SAG 6548 SB	$1,075.00	15	11	53	7	7
SAG 6548 SS	$910.00	15	11	53	7	7
SAG 6560 BK	$1,185.00	15	13	65	7	7
SAG 6560 ORB	$1,185.00	15	13	65	7	7
SAG 6560 PS	$1,185.00	15	13	65	7	7
SAG 6560 SB	$1,185.00	15	13	65	7	7

SKU	List Price	Page #	Shipping Dimensions (inches)			
			Lbs	L	W	H
SAG 6560 SS	$1,075.00	15	13	65	7	7
SAG 6572 BK	$1,585.00	15	17	78	7	7
SAG 6572 ORB	$1,585.00	15	17	78	7	7
SAG 6572 PS	$1,585.00	15	17	78	7	7
SAG 6572 SB	$1,585.00	15	17	78	7	7
SAG 6572 SS	$1,450.00	15	17	78	7	7
SAG 6596 BK	$2,140.00	15	25	102	7	7
SAG 6596 ORB	$2,140.00	15	25	102	7	7
SAG 6596 PS	$2,140.00	15	25	102	7	7
SAG 6596 SB	$2,140.00	15	25	102	7	7
SAG 6596 SS	$1,820.00	15	25	102	7	7
SAS 6536 BK	$1,275.00	27	12	41	7	7
SAS 6536 ORB	$1,275.00	27	12	41	7	7
SAS 6536 PS	$1,275.00	27	12	41	7	7
SAS 6536 SB	$1,275.00	27	12	41	7	7
SAS 6536 SS	$1,065.00	27	12	41	7	7
SAS 6548 BK	$1,490.00	27	14	53	7	7
SAS 6548 ORB	$1,490.00	27	14	53	7	7
SAS 6548 PS	$1,490.00	27	14	53	7	7
SAS 6548 SB	$1,490.00	27	14	53	7	7
SAS 6548 SS	$1,285.00	27	14	53	7	7
SAS 6560 BK	$1,710.00	27	16	65	7	7
SAS 6560 ORB	$1,710.00	27	16	65	7	7
SAS 6560 PS	$1,710.00	27	16	65	7	7
SAS 6560 SB	$1,710.00	27	16	65	7	7
SAS 6560 SS	$1,505.00	27	16	65	7	7
SAS 6572 BK	$2,410.00	27	22	78	7	7
SAS 6572 ORB	$2,410.00	27	22	78	7	7
SAS 6572 PS	$2,410.00	27	22	78	7	7
SAS 6572 SB	$2,410.00	27	22	78	7	7
SAS 6572 SS	$2,020.00	27	22	78	7	7
SAS 6596 BK	$2,985.00	27	33	99	11	7
SAS 6596 ORB	$2,985.00	27	33	99	11	7
SAS 6596 PS	$2,985.00	27	33	99	11	7
SAS 6596 SB	$2,985.00	27	33	99	11	7
SAS 6596 SS	$2,585.00	27	33	99	11	7
SAS 9936-A BK	$1,530.00	28	13	41	7	7
SAS 9936-A ORB	$1,530.00	28	13	41	7	7
SAS 9936-A PS	$1,530.00	28	13	41	7	7
SAS 9936-A SB	$1,530.00	28	13	41	7	7
SAS 9936-A SS	$1,330.00	28	13	41	7	7
SAS 9936-I BK	$1,530.00	28	13	41	7	7
SAS 9936-I ORB	$1,530.00	28	13	41	7	7
SAS 9936-I PS	$1,530.00	28	13	41	7	7

Price Sheet & Index

SKU	List Price	Page #	Shipping Dimensions (inches)			
			Lbs	L	W	H
SAS 9936-I SB	$1,530.00	28	13	41	7	7
SAS 9936-I SS	$1,330.00	28	13	41	7	7
SAS 9936-P BK	$1,530.00	28	13	41	7	7
SAS 9936-P ORB	$1,530.00	28	13	41	7	7
SAS 9936-P PS	$1,530.00	28	13	41	7	7
SAS 9936-P SB	$1,530.00	28	13	41	7	7
SAS 9936-P SS	$1,330.00	28	13	41	7	7
SAS 9948-A BK	$1,745.00	28	15	53	7	7
SAS 9948-A ORB	$1,745.00	28	15	53	7	7
SAS 9948-A PS	$1,745.00	28	15	53	7	7
SAS 9948-A SB	$1,745.00	28	15	53	7	7
SAS 9948-A SS	$1,550.00	28	15	53	7	7
SAS 9948-I BK	$1,745.00	28	15	53	7	7
SAS 9948-I ORB	$1,745.00	28	15	53	7	7
SAS 9948-I PS	$1,745.00	28	15	53	7	7
SAS 9948-I SB	$1,745.00	28	15	53	7	7
SAS 9948-I SS	$1,550.00	28	15	53	7	7
SAS 9948-P BK	$1,745.00	28	15	53	7	7
SAS 9948-P ORB	$1,745.00	28	15	53	7	7
SAS 9948-P PS	$1,745.00	28	15	53	7	7
SAS 9948-P SB	$1,745.00	28	15	53	7	7
SAS 9948-P SS	$1,550.00	28	15	53	7	7
SAS 9960-A BK	$1,965.00	28	17	65	7	7
SAS 9960-A ORB	$1,965.00	28	17	65	7	7
SAS 9960-A PS	$1,965.00	28	17	65	7	7
SAS 9960-A SB	$1,965.00	28	17	65	7	7
SAS 9960-A SS	$1,770.00	28	17	65	7	7
SAS 9960-I BK	$1,965.00	28	17	65	7	7
SAS 9960-I ORB	$1,965.00	28	17	65	7	7
SAS 9960-I PS	$1,965.00	28	17	65	7	7
SAS 9960-I SB	$1,965.00	28	17	65	7	7
SAS 9960-I SS	$1,770.00	28	17	65	7	7
SAS 9960-P BK	$1,965.00	28	17	65	7	7
SAS 9960-P ORB	$1,965.00	28	17	65	7	7
SAS 9960-P PS	$1,965.00	28	17	65	7	7
SAS 9960-P SB	$1,965.00	28	17	65	7	7
SAS 9960-P SS	$1,770.00	28	17	65	7	7
SAS 9972-A BK	$2,920.00	28	18	78	7	7
SAS 9972-A ORB	$2,920.00	28	18	78	7	7
SAS 9972-A PS	$2,920.00	28	18	78	7	7
SAS 9972-A SB	$2,920.00	28	18	78	7	7
SAS 9972-A SS	$2,550.00	28	18	78	7	7
SAS 9972-I BK	$2,920.00	28	18	78	7	7
SAS 9972-I ORB	$2,920.00	28	18	78	7	7

SKU	List Price	Page #	Shipping Dimensions (inches)			
			Lbs	L	W	H
SAS 9972-I PS	$2,920.00	28	18	78	7	7
SAS 9972-I SB	$2,920.00	28	18	78	7	7
SAS 9972-I SS	$2,550.00	28	18	78	7	7
SAS 9972-P BK	$2,920.00	28	18	78	7	7
SAS 9972-P ORB	$2,920.00	28	18	78	7	7
SAS 9972-P PS	$2,920.00	28	18	78	7	7
SAS 9972-P SB	$2,920.00	28	18	78	7	7
SAS 9972-P SS	$2,550.00	28	18	78	7	7
SAS 9996-A BK	$3,495.00	28	33	99	7	7
SAS 9996-A ORB	$3,495.00	28	33	99	7	7
SAS 9996-A PS	$3,495.00	28	33	99	7	7
SAS 9996-A SB	$3,495.00	28	33	99	7	7
SAS 9996-A SS	$3,115.00	28	33	99	7	7
SAS 9996-I BK	$3,495.00	28	33	99	7	7
SAS 9996-I ORB	$3,495.00	28	33	99	7	7
SAS 9996-I PS	$3,495.00	28	33	99	7	7
SAS 9996-I SB	$3,495.00	28	33	99	7	7
SAS 9996-I SS	$3,115.00	28	33	99	7	7
SAS 9996-P BK	$3,495.00	28	33	99	7	7
SAS 9996-P ORB	$3,495.00	28	33	99	7	7
SAS 9996-P PS	$3,495.00	28	33	99	7	7
SAS 9996-P SB	$3,495.00	28	33	99	7	7
SAS 9996-P SS	$3,115.00	28	33	99	7	7
SC 6548 BK	$230.00	119	6	53	7	7
SC 6548 ORB	$230.00	119	6	53	7	7
SC 6548 PS	$230.00	119	6	53	7	7
SC 6548 SB	$230.00	119	6	53	7	7
SC 6548 SS	$170.00	119	6	53	7	7
SC 6596 BK	$460.00	119	10	102	7	7
SC 6596 ORB	$460.00	119	10	102	7	7
SC 6596 PS	$460.00	119	10	102	7	7
SC 6596 SB	$460.00	119	10	102	7	7
SC 6596 SS	$340.00	119	10	102	7	7
SDG 3848 BK	$535.00	17	8	53	7	7
SDG 3848 ORB	$535.00	17	8	53	7	7
SDG 3848 PS	$535.00	17	8	53	7	7
SDG 3848 SB	$535.00	17	8	53	7	7
SDG 3848 SS	$370.00	17	8	53	7	7
SDG 3860 BK	$650.00	17	9	65	7	7
SDG 3860 ORB	$650.00	17	9	65	7	7
SDG 3860 PS	$650.00	17	9	65	7	7
SDG 3860 SB	$650.00	17	9	65	7	7
SDG 3860 SS	$495.00	17	9	65	7	7
SDG 3896 BK	$995.00	17	16	102	7	7

Price Sheet & Index

SKU	List Price	Page #	Shipping Dimensions (inches)			
			Lbs	L	W	H
SDG 3896 ORB	$995.00	17	16	102	7	7
SDG 3896 PS	$995.00	17	16	102	7	7
SDG 3896 SB	$995.00	17	16	102	7	7
SDG 3896 SS	$695.00	17	16	102	7	7
SDG 6548 BK	$550.00	19	9	53	7	7
SDG 6548 ORB	$550.00	19	9	53	7	7
SDG 6548 PS	$550.00	19	9	53	7	7
SDG 6548 SB	$550.00	19	9	53	7	7
SDG 6548 SS	$410.00	19	9	53	7	7
SDG 6560 BK	$735.00	19	10	65	7	7
SDG 6560 ORB	$735.00	19	10	65	7	7
SDG 6560 PS	$735.00	19	10	65	7	7
SDG 6560 SB	$735.00	19	10	65	7	7
SDG 6560 SS	$550.00	19	10	65	7	7
SDG 6596 BK	$1,010.00	19	18	102	7	7
SDG 6596 ORB	$1,010.00	19	18	102	7	7
SDG 6596 PS	$1,010.00	19	18	102	7	7
SDG 6596 SB	$1,010.00	19	18	102	7	7
SDG 6596 SS	$775.00	19	18	102	7	7
SDGAS 6536 BK	$750.00	25	9	41	7	7
SDGAS 6536 ORB	$750.00	25	9	41	7	7
SDGAS 6536 PS	$750.00	25	9	41	7	7
SDGAS 6536 SB	$750.00	25	9	41	7	7
SDGAS 6536 SS	$630.00	25	9	41	7	7
SDGAS 6548 BK	$870.00	25	11	53	7	7
SDGAS 6548 ORB	$870.00	25	11	53	7	7
SDGAS 6548 PS	$870.00	25	11	53	7	7
SDGAS 6548 SB	$870.00	25	11	53	7	7
SDGAS 6548 SS	$750.00	25	11	53	7	7
SDGAS 6560 BK	$920.00	25	13	65	7	7
SDGAS 6560 ORB	$920.00	25	13	65	7	7
SDGAS 6560 PS	$920.00	25	13	65	7	7
SDGAS 6560 SB	$920.00	25	13	65	7	7
SDGAS 6560 SS	$860.00	25	13	65	7	7
SDGAS 6572 BK	$1,245.00	25	19	78	7	7
SDGAS 6572 ORB	$1,245.00	25	19	78	7	7
SDGAS 6572 PS	$1,245.00	25	19	78	7	7
SDGAS 6572 SB	$1,245.00	25	19	78	7	7
SDGAS 6572 SS	$1,035.00	25	19	78	7	7
SDGAS 6596 BK	$1,695.00	25	23	102	7	7
SDGAS 6596 ORB	$1,695.00	25	23	102	7	7
SDGAS 6596 PS	$1,695.00	25	23	102	7	7
SDGAS 6596 SB	$1,695.00	25	23	102	7	7
SDGAS 6596 SS	$1,440.00	25	23	102	7	7

SKU	List Price	Page #	Shipping Dimensions (inches)			
			Lbs	L	W	H
SDGAS 9936-A BK	$1,030.00	26	10	41	7	7
SDGAS 9936-A ORB	$1,030.00	26	10	41	7	7
SDGAS 9936-A PS	$1,030.00	26	10	41	7	7
SDGAS 9936-A SB	$1,030.00	26	10	41	7	7
SDGAS 9936-A SS	$895.00	26	10	41	7	7
SDGAS 9936-I BK	$1,030.00	26	10	41	7	7
SDGAS 9936-I ORB	$1,030.00	26	10	41	7	7
SDGAS 9936-I PS	$1,030.00	26	10	41	7	7
SDGAS 9936-I SB	$1,030.00	26	10	41	7	7
SDGAS 9936-I SS	$895.00	26	10	41	7	7
SDGAS 9936-P BK	$1,030.00	26	10	41	7	7
SDGAS 9936-P ORB	$1,030.00	26	10	41	7	7
SDGAS 9936-P PS	$1,030.00	26	10	41	7	7
SDGAS 9936-P SB	$1,030.00	26	10	41	7	7
SDGAS 9936-P SS	$895.00	26	10	41	7	7
SDGAS 9948-A BK	$1,125.00	26	12	53	7	7
SDGAS 9948-A ORB	$1,125.00	26	12	53	7	7
SDGAS 9948-A PS	$1,125.00	26	12	53	7	7
SDGAS 9948-A SB	$1,125.00	26	12	53	7	7
SDGAS 9948-A SS	$1,015.00	26	12	53	7	7
SDGAS 9948-I BK	$1,125.00	26	12	53	7	7
SDGAS 9948-I ORB	$1,125.00	26	12	53	7	7
SDGAS 9948-I PS	$1,125.00	26	12	53	7	7
SDGAS 9948-I SB	$1,125.00	26	12	53	7	7
SDGAS 9948-I SS	$1,015.00	26	12	53	7	7
SDGAS 9948-P BK	$1,125.00	26	12	53	7	7
SDGAS 9948-P ORB	$1,125.00	26	12	53	7	7
SDGAS 9948-P PS	$1,125.00	26	12	53	7	7
SDGAS 9948-P SB	$1,125.00	26	12	53	7	7
SDGAS 9948-P SS	$1,015.00	26	12	53	7	7
SDGAS 9960-A BK	$1,175.00	26	14	65	7	7
SDGAS 9960-A ORB	$1,175.00	26	14	65	7	7
SDGAS 9960-A PS	$1,175.00	26	14	65	7	7
SDGAS 9960-A SB	$1,175.00	26	14	65	7	7
SDGAS 9960-A SS	$1,125.00	26	14	65	7	7
SDGAS 9960-I BK	$1,175.00	26	14	65	7	7
SDGAS 9960-I ORB	$1,175.00	26	14	65	7	7
SDGAS 9960-I PS	$1,175.00	26	14	65	7	7
SDGAS 9960-I SB	$1,175.00	26	14	65	7	7
SDGAS 9960-I SS	$1,125.00	26	14	65	7	7
SDGAS 9960-P BK	$1,450.00	26	14	65	7	7
SDGAS 9960-P ORB	$1,450.00	26	14	65	7	7
SDGAS 9960-P PS	$1,450.00	26	14	65	7	7
SDGAS 9960-P SB	$1,450.00	26	14	65	7	7

Price Sheet & Index

SKU	List Price	Page #	Shipping Dimensions (inches)			
			Lbs	L	W	H
SDGAS 9960-P SS	$1,325.00	26	14	65	7	7
SDGAS 9972-A BK	$1,890.00	26	20	78	7	7
SDGAS 9972-A ORB	$1,890.00	26	20	78	7	7
SDGAS 9972-A PS	$1,890.00	26	20	78	7	7
SDGAS 9972-A SB	$1,890.00	26	20	78	7	7
SDGAS 9972-A SS	$1,680.00	26	20	78	7	7
SDGAS 9972-I BK	$1,890.00	26	20	78	7	7
SDGAS 9972-I ORB	$1,890.00	26	20	78	7	7
SDGAS 9972-I PS	$1,890.00	26	20	78	7	7
SDGAS 9972-I SB	$1,890.00	26	20	78	7	7
SDGAS 9972-I SS	$1,680.00	26	20	78	7	7
SDGAS 9972-P BK	$1,890.00	26	20	78	7	7
SDGAS 9972-P ORB	$1,890.00	26	20	78	7	7
SDGAS 9972-P PS	$1,890.00	26	20	78	7	7
SDGAS 9972-P SB	$1,890.00	26	20	78	7	7
SDGAS 9972-P SS	$1,680.00	26	20	78	7	7
SDGAS 9996-A BK	$2,205.00	26	24	102	7	7
SDGAS 9996-A ORB	$2,205.00	26	24	102	7	7
SDGAS 9996-A PS	$2,205.00	26	24	102	7	7
SDGAS 9996-A SB	$2,205.00	26	24	102	7	7
SDGAS 9996-A SS	$1,970.00	26	24	102	7	7
SDGAS 9996-I BK	$2,205.00	26	24	102	7	7
SDGAS 9996-I ORB	$2,205.00	26	24	102	7	7
SDGAS 9996-I PS	$2,205.00	26	24	102	7	7
SDGAS 9996-I SB	$2,205.00	26	24	102	7	7
SDGAS 9996-I SS	$1,970.00	26	24	102	7	7
SDGAS 9996-P BK	$2,205.00	26	24	102	7	7
SDGAS 9996-P ORB	$2,205.00	26	24	102	7	7
SDGAS 9996-P PS	$2,205.00	26	24	102	7	7
SDGAS 9996-P SB	$2,205.00	26	24	102	7	7
SDGAS 9996-P SS	$1,970.00	26	24	102	7	7
SE 65 BK	$60.00	119	1	4	4	4
SE 65 ORB	$60.00	119	1	4	4	4
SE 65 PS	$60.00	119	1	4	4	4
SE 65 SB	$60.00	119	1	4	4	4
SE 65 SS	$50.00	119	1	4	4	4
SHA 65 BK	$140.00	120	2	4	4	4
SHA 65 ORB	$140.00	120	2	4	4	4
SHA 65 PS	$140.00	120	2	4	4	4
SHA 65 SB	$140.00	120	2	4	4	4
SHA 65 SS	$130.00	120	2	4	4	4
SL 32	$10.00	114	1	4	4	4
SL 65	$10.00	116	1	4	4	4
SLA 65 BK	$140.00	119	2	4	4	4

SKU	List Price	Page #	Shipping Dimensions (inches)			
			Lbs	L	W	H
SLA 65 ORB	$140.00	119	2	4	4	4
SLA 65 PS	$140.00	119	2	4	4	4
SLA 65 SB	$140.00	119	2	4	4	4
SLA 65 SS	$130.00	119	2	4	4	4
S-LAG 3836 BK	$780.00	14	9	41	7	7
S-LAG 3836 ORB	$780.00	14	9	41	7	7
S-LAG 3836 PS	$780.00	14	9	41	7	7
S-LAG 3836 SB	$780.00	14	9	41	7	7
S-LAG 3836 SS	$620.00	14	9	41	7	7
S-LAG 3848 BK	$840.00	14	11	53	7	7
S-LAG 3848 ORB	$840.00	14	11	53	7	7
S-LAG 3848 PS	$840.00	14	11	53	7	7
S-LAG 3848 SB	$840.00	14	11	53	7	7
S-LAG 3848 SS	$665.00	14	11	53	7	7
S-LAG 3860 BK	$1,000.00	14	14	65	7	7
S-LAG 3860 ORB	$1,000.00	14	14	65	7	7
S-LAG 3860 PS	$1,000.00	14	14	65	7	7
S-LAG 3860 SB	$1,000.00	14	14	65	7	7
S-LAG 3860 SS	$855.00	14	14	65	7	7
S-LAG 3872 BK	$1,375.00	14	17	78	7	7
S-LAG 3872 ORB	$1,375.00	14	17	78	7	7
S-LAG 3872 PS	$1,375.00	14	17	78	7	7
S-LAG 3872 SB	$1,375.00	14	17	78	7	7
S-LAG 3872 SS	$1,060.00	14	17	78	7	7
S-LAG 3896 BK	$1,660.00	14	23	102	7	7
S-LAG 3896 ORB	$1,660.00	14	23	102	7	7
S-LAG 3896 PS	$1,660.00	14	23	102	7	7
S-LAG 3896 SB	$1,660.00	14	23	102	7	7
S-LAG 3896 SS	$1,335.00	14	23	102	7	7
S-LAG 6536 BK	$1,020.00	16	9	41	7	7
S-LAG 6536 ORB	$1,020.00	16	9	41	7	7
S-LAG 6536 PS	$1,020.00	16	9	41	7	7
S-LAG 6536 SB	$1,020.00	16	9	41	7	7
S-LAG 6536 SS	$855.00	16	9	41	7	7
S-LAG 6548 BK	$1,075.00	16	11	53	7	7
S-LAG 6548 ORB	$1,075.00	16	11	53	7	7
S-LAG 6548 PS	$1,075.00	16	11	53	7	7
S-LAG 6548 SB	$1,075.00	16	11	53	7	7
S-LAG 6548 SS	$910.00	16	11	53	7	7
S-LAG 6560 BK	$1,185.00	16	13	65	7	7
S-LAG 6560 ORB	$1,185.00	16	13	65	7	7
S-LAG 6560 PS	$1,185.00	16	13	65	7	7
S-LAG 6560 SB	$1,185.00	16	13	65	7	7
S-LAG 6560 SS	$1,075.00	16	13	65	7	7

Price Sheet & Index

SKU	List Price	Page #	Shipping Dimensions (inches)			
			Lbs	L	W	H
S-LAG 6572 BK	$1,585.00	16	17	78	7	7
S-LAG 6572 ORB	$1,585.00	16	17	78	7	7
S-LAG 6572 PS	$1,585.00	16	17	78	7	7
S-LAG 6572 SB	$1,585.00	16	17	78	7	7
S-LAG 6572 SS	$1,450.00	16	17	78	7	7
S-LAG 6596 BK	$2,140.00	16	25	102	7	7
S-LAG 6596 ORB	$2,140.00	16	25	102	7	7
S-LAG 6596 PS	$2,140.00	16	25	102	7	7
S-LAG 6596 SB	$2,140.00	16	25	102	7	7
S-LAG 6596 SS	$1,820.00	16	25	102	7	7
SLOT 24 BK	$135.00	126	3	30	7	7
SLOT 24 ORB	$135.00	126	3	30	7	7
SLOT 24 PS	$135.00	126	3	30	7	7
SLOT 24 SB	$135.00	126	3	30	7	7
SLOT 24 SS	$105.00	126	3	30	7	7
SLOT 32 BK	$170.00	126	3	37	7	7
SLOT 32 ORB	$170.00	126	3	37	7	7
SLOT 32 PS	$170.00	126	3	37	7	7
SLOT 32 SB	$170.00	126	3	37	7	7
SLOT 32 SS	$135.00	126	3	37	7	7
SLOT 36 BK	$195.00	126	3	41	7	7
SLOT 36 ORB	$195.00	126	3	41	7	7
SLOT 36 PS	$195.00	126	3	41	7	7
SLOT 36 SB	$195.00	126	3	41	7	7
SLOT 36 SS	$145.00	126	3	41	7	7
SLOT 42 BK	$250.00	126	3	47	7	7
SLOT 42 ORB	$250.00	126	3	47	7	7
SLOT 42 PS	$250.00	126	3	47	7	7
SLOT 42 SB	$250.00	126	3	47	7	7
SLOT 42 SS	$195.00	126	3	47	7	7
SLOT 48 BK	$295.00	126	3	53	7	7
SLOT 48 ORB	$295.00	126	3	53	7	7
SLOT 48 PS	$295.00	126	3	53	7	7
SLOT 48 SB	$295.00	126	3	53	7	7
SLOT 48 SS	$235.00	126	3	53	7	7
SLOT 60 BK	$360.00	126	4	65	7	7
SLOT 60 ORB	$360.00	126	4	65	7	7
SLOT 60 PS	$360.00	126	4	65	7	7
SLOT 60 SB	$360.00	126	4	65	7	7
SLOT 60 SS	$285.00	126	4	65	7	7
S-LT 3836 BK	$405.00	18	7	41	7	7
S-LT 3836 ORB	$405.00	18	7	41	7	7
S-LT 3836 PS	$405.00	18	7	41	7	7
S-LT 3836 SB	$405.00	18	7	41	7	7

SKU	List Price	Page #	Shipping Dimensions (inches)			
			Lbs	L	W	H
S-LT 3836 SS	$280.00	18	7	41	7	7
S-LT 3848 BK	$535.00	18	9	53	7	7
S-LT 3848 ORB	$535.00	18	9	53	7	7
S-LT 3848 PS	$535.00	18	9	53	7	7
S-LT 3848 SB	$535.00	18	9	53	7	7
S-LT 3848 SS	$370.00	18	9	53	7	7
S-LT 3860 BK	$650.00	18	11	65	7	7
S-LT 3860 ORB	$650.00	18	11	65	7	7
S-LT 3860 PS	$650.00	18	11	65	7	7
S-LT 3860 SB	$650.00	18	11	65	7	7
S-LT 3860 SS	$495.00	18	11	65	7	7
S-LT 3872 BK	$805.00	18	15	78	7	7
S-LT 3872 ORB	$805.00	18	15	78	7	7
S-LT 3872 PS	$805.00	18	15	78	7	7
S-LT 3872 SB	$805.00	18	15	78	7	7
S-LT 3872 SS	$555.00	18	15	78	7	7
S-LT 3896 BK	$995.00	18	23	102	7	7
S-LT 3896 ORB	$995.00	18	23	102	7	7
S-LT 3896 PS	$995.00	18	23	102	7	7
S-LT 3896 SB	$995.00	18	23	102	7	7
S-LT 3896 SS	$695.00	18	23	102	7	7
S-LT 6536 BK	$415.00	20	7	41	7	7
S-LT 6536 ORB	$415.00	20	7	41	7	7
S-LT 6536 PS	$415.00	20	7	41	7	7
S-LT 6536 SB	$415.00	20	7	41	7	7
S-LT 6536 SS	$310.00	20	7	41	7	7
S-LT 6548 BK	$550.00	20	9	53	7	7
S-LT 6548 ORB	$550.00	20	9	53	7	7
S-LT 6548 PS	$550.00	20	9	53	7	7
S-LT 6548 SB	$550.00	20	9	53	7	7
S-LT 6548 SS	$410.00	20	9	53	7	7
S-LT 6560 BK	$735.00	20	11	65	7	7
S-LT 6560 ORB	$735.00	20	11	65	7	7
S-LT 6560 PS	$735.00	20	11	65	7	7
S-LT 6560 SB	$735.00	20	11	65	7	7
S-LT 6560 SS	$550.00	20	11	65	7	7
S-LT 6572 BK	$825.00	20	15	78	7	7
S-LT 6572 ORB	$825.00	20	15	78	7	7
S-LT 6572 PS	$825.00	20	15	78	7	7
S-LT 6572 SB	$825.00	20	15	78	7	7
S-LT 6572 SS	$615.00	20	15	78	7	7
S-LT 6596 BK	$1,010.00	20	23	102	7	7
S-LT 6596 ORB	$1,010.00	20	23	102	7	7
S-LT 6596 PS	$1,010.00	20	23	102	7	7

Price Sheet & Index

SKU	List Price	Page #	Shipping Dimensions (inches)			
			Lbs	L	W	H
S-LT 6596 SB	$1,010.00	20	23	102	7	7
S-LT 6596 SS	$775.00	20	23	102	7	7
S-LTIF 6536 BK	$685.00	22	7	41	7	7
S-LTIF 6536 ORB	$685.00	22	7	41	7	7
S-LTIF 6536 PS	$685.00	22	7	41	7	7
S-LTIF 6536 SB	$685.00	22	7	41	7	7
S-LTIF 6536 SS	$620.00	22	7	41	7	7
S-LTIF 6548 BK	$910.00	22	9	53	7	7
S-LTIF 6548 ORB	$910.00	22	9	53	7	7
S-LTIF 6548 PS	$910.00	22	9	53	7	7
S-LTIF 6548 SB	$910.00	22	9	53	7	7
S-LTIF 6548 SS	$825.00	22	9	53	7	7
S-LTIF 6560 BK	$1,120.00	22	11	65	7	7
S-LTIF 6560 ORB	$1,120.00	22	11	65	7	7
S-LTIF 6560 PS	$1,120.00	22	11	65	7	7
S-LTIF 6560 SB	$1,120.00	22	11	65	7	7
S-LTIF 6560 SS	$1,035.00	22	11	65	7	7
S-LTIF 6572 BK	$1,365.00	22	15	78	7	7
S-LTIF 6572 ORB	$1,365.00	22	15	78	7	7
S-LTIF 6572 PS	$1,365.00	22	15	78	7	7
S-LTIF 6572 SB	$1,365.00	22	15	78	7	7
S-LTIF 6572 SS	$1,240.00	22	15	78	7	7
S-LTIF 6596 BK	$1,805.00	22	23	102	7	7
S-LTIF 6596 ORB	$1,805.00	22	23	102	7	7
S-LTIF 6596 PS	$1,805.00	22	23	102	7	7
S-LTIF 6596 SB	$1,805.00	22	23	102	7	7
S-LTIF 6596 SS	$1,645.00	22	23	102	7	7
ST 125	$55.00	140	2	4	4	4
ST 65	$50.00	140	2	4	4	4
STIF 6540 BK	$780.00	21	10	47	7	7
STIF 6540 ORB	$780.00	21	10	47	7	7
STIF 6540 PS	$780.00	21	10	47	7	7
STIF 6540 SB	$780.00	21	10	47	7	7
STIF 6540 SS	$695.00	21	10	47	7	7
STIF 6548 BK	$910.00	21	12	53	7	7
STIF 6548 ORB	$910.00	21	12	53	7	7
STIF 6548 PS	$910.00	21	12	53	7	7
STIF 6548 SB	$910.00	21	12	53	7	7
STIF 6548 SS	$825.00	21	12	53	7	7
STIF 6560 BK	$1,120.00	21	14	65	7	7
STIF 6560 ORB	$1,120.00	21	14	65	7	7
STIF 6560 PS	$1,120.00	21	14	65	7	7
STIF 6560 SB	$1,120.00	21	14	65	7	7
STIF 6560 SS	$1,035.00	21	14	65	7	7

SKU	List Price	Page #	Shipping Dimensions (inches)			
			Lbs	L	W	H
STIF 6580 BK	$1,550.00	21	22	88	7	7
STIF 6580 ORB	$1,550.00	21	22	88	7	7
STIF 6580 PS	$1,550.00	21	22	88	7	7
STIF 6580 SB	$1,550.00	21	22	88	7	7
STIF 6580 SS	$1,390.00	21	22	88	7	7
STIF 6596 BK	$1,805.00	21	27	102	7	7
STIF 6596 ORB	$1,805.00	21	27	102	7	7
STIF 6596 PS	$1,805.00	21	27	102	7	7
STIF 6596 SB	$1,805.00	21	27	102	7	7
STIF 6596 SS	$1,645.00	21	27	102	7	7
STIF AS 6540 BK	$1,110.00	29	15	47	7	7
STIF AS 6540 ORB	$1,110.00	29	15	47	7	7
STIF AS 6540 PS	$1,110.00	29	15	47	7	7
STIF AS 6540 SB	$1,110.00	29	15	47	7	7
STIF AS 6540 SS	$995.00	29	15	47	7	7
STIF AS 6548 BK	$1,275.00	29	17	53	7	7
STIF AS 6548 ORB	$1,275.00	29	17	53	7	7
STIF AS 6548 PS	$1,275.00	29	17	53	7	7
STIF AS 6548 SB	$1,275.00	29	17	53	7	7
STIF AS 6548 SS	$1,140.00	29	17	53	7	7
STIF AS 6560 BK	$1,495.00	29	20	65	7	7
STIF AS 6560 ORB	$1,495.00	29	20	65	7	7
STIF AS 6560 PS	$1,495.00	29	20	65	7	7
STIF AS 6560 SB	$1,495.00	29	20	65	7	7
STIF AS 6560 SS	$1,350.00	29	20	65	7	7
STIF AS 6580 BK	$2,090.00	29	30	83	11	7
STIF AS 6580 ORB	$2,090.00	29	30	83	11	7
STIF AS 6580 PS	$2,090.00	29	30	83	11	7
STIF AS 6580 SB	$2,090.00	29	30	83	11	7
STIF AS 6580 SS	$1,900.00	29	30	83	11	7
STIF AS 6596 BK	$2,470.00	29	35	99	11	7
STIF AS 6596 ORB	$2,470.00	29	35	99	11	7
STIF AS 6596 PS	$2,470.00	29	35	99	11	7
STIF AS 6596 SB	$2,470.00	29	35	99	11	7
STIF AS 6596 SS	$2,270.00	29	35	99	11	7
STIF AS 9940-A BK	$1,680.00	30	15	47	7	7
STIF AS 9940-A ORB	$1,680.00	30	15	47	7	7
STIF AS 9940-A PS	$1,680.00	30	15	47	7	7
STIF AS 9940-A SB	$1,680.00	30	15	47	7	7
STIF AS 9940-A SS	$1,520.00	30	15	47	7	7
STIF AS 9940-I BK	$1,680.00	30	15	47	7	7
STIF AS 9940-I ORB	$1,680.00	30	15	47	7	7
STIF AS 9940-I PS	$1,680.00	30	15	47	7	7
STIF AS 9940-I SB	$1,680.00	30	15	47	7	7

Price Sheet & Index

SKU	List Price	Page #	Shipping Dimensions (inches)			
			Lbs	L	W	H
STIF AS 9940-I SS	$1,520.00	30	15	47	7	7
STIF AS 9940-P BK	$1,680.00	30	15	47	7	7
STIF AS 9940-P ORB	$1,680.00	30	15	47	7	7
STIF AS 9940-P PS	$1,680.00	30	15	47	7	7
STIF AS 9940-P SB	$1,680.00	30	15	47	7	7
STIF AS 9940-P SS	$1,520.00	30	15	47	7	7
STIF AS 9948-A BK	$1,845.00	30	17	53	7	7
STIF AS 9948-A ORB	$1,845.00	30	17	53	7	7
STIF AS 9948-A PS	$1,845.00	30	17	53	7	7
STIF AS 9948-A SB	$1,845.00	30	17	53	7	7
STIF AS 9948-A SS	$1,745.00	30	17	53	7	7
STIF AS 9948-I BK	$1,845.00	30	17	53	7	7
STIF AS 9948-I ORB	$1,845.00	30	17	53	7	7
STIF AS 9948-I PS	$1,845.00	30	17	53	7	7
STIF AS 9948-I SB	$1,845.00	30	17	53	7	7
STIF AS 9948-I SS	$1,745.00	30	17	53	7	7
STIF AS 9948-P BK	$1,845.00	30	17	53	7	7
STIF AS 9948-P ORB	$1,845.00	30	17	53	7	7
STIF AS 9948-P PS	$1,845.00	30	17	53	7	7
STIF AS 9948-P SB	$1,845.00	30	17	53	7	7
STIF AS 9948-P SS	$1,745.00	30	17	53	7	7
STIF AS 9960-A BK	$2,065.00	30	20	65	7	7
STIF AS 9960-A ORB	$2,065.00	30	20	65	7	7
STIF AS 9960-A PS	$2,065.00	30	20	65	7	7
STIF AS 9960-A SB	$2,065.00	30	20	65	7	7
STIF AS 9960-A SS	$1,875.00	30	20	65	7	7
STIF AS 9960-I BK	$2,065.00	30	20	65	7	7
STIF AS 9960-I ORB	$2,065.00	30	20	65	7	7
STIF AS 9960-I PS	$2,065.00	30	20	65	7	7
STIF AS 9960-I SB	$2,065.00	30	20	65	7	7
STIF AS 9960-I SS	$1,875.00	30	20	65	7	7
STIF AS 9960-P BK	$2,065.00	30	20	65	7	7
STIF AS 9960-P ORB	$2,065.00	30	20	65	7	7
STIF AS 9960-P PS	$2,065.00	30	20	65	7	7
STIF AS 9960-P SB	$2,065.00	30	20	65	7	7
STIF AS 9960-P SS	$1,875.00	30	20	65	7	7
STIF AS 9980-A BK	$2,800.00	30	30	83	11	7
STIF AS 9980-A ORB	$2,800.00	30	30	83	11	7
STIF AS 9980-A PS	$2,800.00	30	30	83	11	7
STIF AS 9980-A SB	$2,800.00	30	30	83	11	7
STIF AS 9980-A SS	$2,675.00	30	30	83	11	7
STIF AS 9980-I BK	$2,800.00	30	30	83	11	7
STIF AS 9980-I ORB	$2,800.00	30	30	83	11	7
STIF AS 9980-I PS	$2,800.00	30	30	83	11	7

SKU	List Price	Page #	Shipping Dimensions (inches)			
			Lbs	L	W	H
STIF AS 9980-I SB	$2,800.00	30	30	83	11	7
STIF AS 9980-I SS	$2,675.00	30	30	83	11	7
STIF AS 9980-P BK	$2,800.00	30	30	83	11	7
STIF AS 9980-P ORB	$2,800.00	30	30	83	11	7
STIF AS 9980-P PS	$2,800.00	30	30	83	11	7
STIF AS 9980-P SB	$2,800.00	30	30	83	11	7
STIF AS 9980-P SS	$2,675.00	30	30	83	11	7
STIF AS 9996-A BK	$3,160.00	30	34	99	11	7
STIF AS 9996-A ORB	$3,160.00	30	35	99	11	7
STIF AS 9996-A PS	$3,160.00	30	35	99	11	7
STIF AS 9996-A SB	$3,160.00	30	35	99	11	7
STIF AS 9996-A SS	$2,965.00	30	35	99	11	7
STIF AS 9996-I BK	$3,160.00	30	35	99	11	7
STIF AS 9996-I ORB	$3,160.00	30	35	99	11	7
STIF AS 9996-I PS	$3,160.00	30	35	99	11	7
STIF AS 9996-I SB	$3,160.00	30	35	99	11	7
STIF AS 9996-I SS	$2,965.00	30	35	99	11	7
STIF AS 9996-P BK	$3,285.00	30	35	99	11	7
STIF AS 9996-P ORB	$3,285.00	30	35	99	11	7
STIF AS 9996-P PS	$3,160.00	30	35	99	11	7
STIF AS 9996-P SB	$3,160.00	30	35	99	11	7
STIF AS 9996-P SS	$2,965.00	30	35	99	11	7
T 15 A BK	$460.00	66	4	7	7	4
T 15 A ORB	$460.00	66	4	7	7	4
T 15 A PS	$460.00	66	4	7	7	4
T 15 A SB	$460.00	66	4	7	7	4
T 15 A SS	$400.00	66	4	7	7	4
T 15 B BK	$460.00	66	4	7	7	4
T 15 B ORB	$460.00	66	4	7	7	4
T 15 B PS	$460.00	66	4	7	7	4
T 15 B SB	$460.00	66	4	7	7	4
T 15 B SS	$400.00	66	4	7	7	4
T 20 A BK	$540.00	67	6	9	9	4
T 20 A ORB	$540.00	67	6	9	9	4
T 20 A PS	$540.00	67	6	9	9	4
T 20 A SB	$540.00	67	6	9	9	4
T 20 A SS	$480.00	67	6	9	9	4
T 20 B BK	$540.00	67	6	9	9	4
T 20 B ORB	$540.00	67	6	9	9	4
T 20 B PS	$540.00	67	6	9	9	4
T 20 B SB	$540.00	67	6	9	9	4
T 20 B SS	$480.00	67	6	9	9	4
T 42-BK	$210.00	129	2	6	6	3
T 42-ORB	$210.00	129	2	6	6	3

Price Sheet & Index

SKU	List Price	Page #	Shipping Dimensions (inches)			
			Lbs	L	W	H
T 42-PS	$210.00	129	2	6	6	3
T 42-SB	$210.00	129	2	6	6	3
T 42-SS	$160.00	129	2	6	6	3
T 52-BK	$235.00	130	2	6	6	3
T 52-ORB	$235.00	130	2	6	6	3
T 52-PS	$235.00	130	2	6	6	3
T 52-SB	$235.00	130	2	6	6	3
T 52-SS	$180.00	130	2	6	6	3
T 54-BK	$240.00	130	2	6	6	3
T 54-ORB	$240.00	130	2	6	6	3
T 54-PS	$240.00	130	2	6	6	3
T 54-SB	$240.00	130	2	6	6	3
T 54-SS	$185.00	130	2	6	6	3
TA 6520 BK	$350.00	125	4	30	7	7
TA 6520 ORB	$350.00	125	4	30	7	7
TA 6520 PS	$350.00	125	4	30	7	7
TA 6520 SB	$350.00	125	4	30	7	7
TA 6520 SS	$315.00	125	4	30	7	7
TA 6540 BK	$615.00	120	7	47	7	7
TA 6540 ORB	$615.00	120	7	47	7	7
TA 6540 PS	$615.00	120	7	47	7	7
TA 6540 SB	$615.00	120	7	47	7	7
TA 6540 SS	$540.00	120	7	47	7	7
TA 6548 BK	$735.00	120	8	53	7	7
TA 6548 ORB	$735.00	120	8	53	7	7
TA 6548 PS	$735.00	120	8	53	7	7
TA 6548 SB	$735.00	120	8	53	7	7
TA 6548 SS	$660.00	120	8	53	7	7
TA 6560 BK	$915.00	120	9	65	7	7
TA 6560 ORB	$915.00	120	9	65	7	7
TA 6560 PS	$915.00	120	9	65	7	7
TA 6560 SB	$915.00	120	9	65	7	7
TA 6560 SS	$840.00	120	9	65	7	7
TC 6548 BK	$370.00	120	7	53	7	7
TC 6548 ORB	$370.00	120	7	53	7	7
TC 6548 PS	$370.00	120	7	53	7	7
TC 6548 SB	$370.00	120	7	53	7	7
TC 6548 SS	$305.00	120	7	53	7	7
TC 6596 BK	$745.00	120	12	102	7	7
TC 6596 ORB	$745.00	120	12	102	7	7
TC 6596 PS	$745.00	120	12	102	7	7
TC 6596 SB	$745.00	120	12	102	7	7
TC 6596 SS	$620.00	120	12	102	7	7
TD 15-2A BK	$575.00	66	7	9	9	7

SKU	List Price	Page #	Shipping Dimensions (inches)			
			Lbs	L	W	H
TD 15-2A ORB	$575.00	66	7	9	9	7
TD 15-2A PS	$575.00	66	7	9	9	7
TD 15-2A SB	$575.00	66	7	9	9	7
TD 15-2A SS	$515.00	66	7	9	9	7
TD 15-2I BK	$575.00	66	10	9	9	7
TD 15-2I ORB	$575.00	66	10	9	9	7
TD 15-2I PS	$575.00	66	10	9	9	7
TD 15-2I SB	$575.00	66	10	9	9	7
TD 15-2I SS	$515.00	66	10	9	9	7
TD 15-2P BK	$575.00	66	7	9	9	7
TD 15-2P ORB	$575.00	66	7	9	9	7
TD 15-2P PS	$575.00	66	7	9	9	7
TD 15-2P SB	$575.00	66	7	9	9	7
TD 15-2P SS	$515.00	66	7	9	9	7
TD 15-3A BK	$595.00	66	7	9	9	7
TD 15-3A ORB	$595.00	66	7	9	9	7
TD 15-3A PS	$595.00	66	7	9	9	7
TD 15-3A SB	$595.00	66	7	9	9	7
TD 15-3A SS	$535.00	66	7	9	9	7
TD 15-3I BK	$595.00	66	10	9	9	7
TD 15-3I ORB	$595.00	66	10	9	9	7
TD 15-3I PS	$595.00	66	10	9	9	7
TD 15-3I SB	$595.00	66	10	9	9	7
TD 15-3I SS	$535.00	66	10	9	9	7
TD 15-3P BK	$595.00	66	7	9	9	7
TD 15-3P ORB	$595.00	66	7	9	9	7
TD 15-3P PS	$595.00	66	7	9	9	7
TD 15-3P SB	$595.00	66	7	9	9	7
TD 15-3P SS	$535.00	66	7	9	9	7
TD 20-2A BK	$655.00	67	9	9	9	7
TD 20-2A ORB	$655.00	67	9	9	9	7
TD 20-2A PS	$655.00	67	9	9	9	7
TD 20-2A SB	$655.00	67	9	9	9	7
TD 20-2A SS	$595.00	67	9	9	9	7
TD 20-2I BK	$655.00	67	13	9	9	7
TD 20-2I ORB	$655.00	67	13	9	9	7
TD 20-2I PS	$655.00	67	13	9	9	7
TD 20-2I SB	$655.00	67	13	9	9	7
TD 20-2I SS	$595.00	67	13	9	9	7
TD 20-2P BK	$655.00	67	9	9	9	7
TD 20-2P ORB	$655.00	67	9	9	9	7
TD 20-2P PS	$655.00	67	9	9	9	7
TD 20-2P SB	$655.00	67	9	9	9	7
TD 20-2P SS	$595.00	67	9	9	9	7

Price Sheet & Index

SKU	List Price	Page #	Shipping Dimensions (inches)			
			Lbs	L	W	H
TD 20-3A BK	$665.00	67	9	9	9	7
TD 20-3A ORB	$665.00	67	9	9	9	7
TD 20-3A PS	$665.00	67	9	9	9	7
TD 20-3A SB	$665.00	67	9	9	9	7
TD 20-3A SS	$605.00	67	9	9	9	7
TD 20-3I BK	$665.00	67	13	9	9	7
TD 20-3I ORB	$665.00	67	13	9	9	7
TD 20-3I PS	$665.00	67	13	9	9	7
TD 20-3I SB	$665.00	67	13	9	9	7
TD 20-3I SS	$605.00	67	13	9	9	7
TD 20-3P BK	$665.00	67	9	9	9	7
TD 20-3P ORB	$665.00	67	9	9	9	7
TD 20-3P PS	$665.00	67	9	9	9	7
TD 20-3P SB	$665.00	67	9	9	9	7
TD 20-3P SS	$605.00	67	9	9	9	7
TDB 15-A BK	$575.00	66	5	9	9	7
TDB 15-A ORB	$575.00	66	5	9	9	7
TDB 15-A PS	$575.00	66	5	9	9	7
TDB 15-A SB	$575.00	66	5	9	9	7
TDB 15-A SS	$515.00	66	5	9	9	7
TDB 15-P BK	$575.00	66	5	9	9	7
TDB 15-P ORB	$575.00	66	5	9	9	7
TDB 15-P PS	$575.00	66	5	9	9	7
TDB 15-P SB	$575.00	66	5	9	9	7
TDB 15-P SS	$515.00	66	5	9	9	7
TDB 15-S BK	$690.00	66	11	9	9	7
TDB 15-S ORB	$690.00	66	11	9	9	7
TDB 15-S PS	$690.00	66	11	9	9	7
TDB 15-S SB	$690.00	66	11	9	9	7
TDB 15-S SS	$610.00	66	11	9	9	7
TDB 20-A BK	$645.00	67	7	13	13	7
TDB 20-A ORB	$645.00	67	7	13	13	7
TDB 20-A PS	$645.00	67	7	13	13	7
TDB 20-A SB	$645.00	67	7	13	13	7
TDB 20-A SS	$595.00	67	7	13	13	7
TDB 20-P BK	$645.00	67	7	13	13	7
TDB 20-P ORB	$645.00	67	7	13	13	7
TDB 20-P PS	$645.00	67	7	13	13	7
TDB 20-P SB	$645.00	67	7	13	13	7
TDB 20-P SS	$595.00	67	7	13	13	7
TDB 20-S BK	$690.00	67	9	13	13	7
TDB 20-S ORB	$690.00	67	9	13	13	7
TDB 20-S PS	$690.00	67	9	13	13	7
TDB 20-S SB	$690.00	67	9	13	13	7

SKU	List Price	Page #	Shipping Dimensions (inches)			
			Lbs	L	W	H
TDB 20-S SS	$610.00	67	9	13	13	7
TE 65 BK	$75.00	120	1	4	4	4
TE 65 ORB	$75.00	120	1	4	4	4
TE 65 PS	$75.00	120	1	4	4	4
TE 65 SB	$75.00	120	1	4	4	4
TE 65 SS	$60.00	120	1	4	4	4
TIF PL	$40.00	120	1	4	4	4
TJS 65	$25.00	120	1	4	4	4
TN4A	$200.00	139	1	6	6	2
TNAS	$45.00	139	1	4	4	4
TNAS-2	$70.00	139	1	4	4	4
TNAS-3	$75.00	139	1	4	4	4
TNAS-4	$85.00	139	1	4	4	4
TNAS-T	$55.00	139	1	4	4	4
TNRN-4	$55.00	139	1	7	7	5
TNRN-P	$40.00	139	1	4	4	4
TNRN-S	$200.00	139	1	4	4	4
UA 6524 BK	$160.00	124	4	30	7	7
UA 6524 ORB	$160.00	124	4	30	7	7
UA 6524 PS	$160.00	124	4	30	7	7
UA 6524 SB	$160.00	124	4	30	7	7
UA 6524 SS	$95.00	124	4	30	7	7
UA 6525 BK	$300.00	124	4	30	7	7
UA 6525 ORB	$300.00	124	4	30	7	7
UA 6525 PS	$300.00	124	4	30	7	7
UA 6525 SB	$300.00	124	4	30	7	7
UA 6525 SS	$200.00	124	4	30	7	7
UA 6532 BK	$195.00	124	5	41	7	7
UA 6532 ORB	$195.00	124	5	41	7	7
UA 6532 PS	$195.00	124	5	41	7	7
UA 6532 SB	$195.00	124	5	41	7	7
UA 6532 SS	$160.00	124	5	41	7	7
UA 6536 BK	$240.00	124	5	41	7	7
UA 6536 ORB	$240.00	124	5	41	7	7
UA 6536 PS	$240.00	124	5	41	7	7
UA 6536 SB	$240.00	124	5	41	7	7
UA 6536 SS	$170.00	124	5	41	7	7
UA 6542 BK	$295.00	124	6	47	7	7
UA 6542 ORB	$295.00	124	6	47	7	7
UA 6542 PS	$295.00	124	6	47	7	7
UA 6542 SB	$295.00	124	6	47	7	7
UA 6542 SS	$220.00	124	6	47	7	7
UA 6548 BK	$340.00	124	6	53	7	7
UA 6548 ORB	$340.00	124	6	53	7	7

Price Sheet & Index

SKU	List Price	Page #	Shipping Dimensions (inches)			
			Lbs	L	W	H
UA 6548 PS	$340.00	124	6	53	7	7
UA 6548 SB	$340.00	124	6	53	7	7
UA 6548 SS	$260.00	124	6	53	7	7
UA 6558 BK	$405.00	124	7	65	7	7
UA 6558 ORB	$405.00	124	7	65	7	7
UA 6558 PS	$405.00	124	7	65	7	7
UA 6558 SB	$405.00	124	7	65	7	7
UA 6558 SS	$305.00	124	7	65	7	7
UA 6560 BK	$420.00	124	7	65	7	7
UA 6560 ORB	$420.00	124	7	65	7	7
UA 6560 PS	$420.00	124	7	65	7	7
UA 6560 SB	$420.00	124	7	65	7	7
UA 6560 SS	$320.00	124	7	65	7	7
UC 24-ABS	$50.00	133	3	30	7	7
UC 24-HMP	$65.00	133	3	30	7	7
UC 24-PVC	$50.00	133	3	30	7	7
UC 30-ABS	$55.00	133	3	37	7	7
BGF	$70.00	133	3	37	7	7
UC 30-PVC	$55.00	133	3	37	7	7
UC 32-ABS	$60.00	133	3	37	7	7
UC 32-HMP	$75.00	133	3	37	7	7
UC 32-PVC	$60.00	133	3	37	7	7
UC 36-ABS	$65.00	133	3	41	7	7
UC 36-HMP	$80.00	133	3	41	7	7
UC 36-PVC	$65.00	133	3	41	7	7
UC 42-ABS	$70.00	133	4	47	7	7
UC 42-HMP	$85.00	133	4	47	7	7
UC 42-PVC	$70.00	133	4	47	7	7
UC 48-ABS	$75.00	133	4	53	7	7
UC 48-HMP	$90.00	133	4	53	7	7
UC 48-PVC	$75.00	133	4	53	7	7
UC 54-ABS	$80.00	133	4	65	7	7
UC 54-HMP	$95.00	133	4	65	7	7
UC 54-PVC	$80.00	133	4	65	7	7
UC 60-ABS	$85.00	133	4	65	7	7
UC 60-HMP	$100.00	133	4	65	7	7
UC 60-PVC	$85.00	133	4	65	7	7
UCP 2	$75.00	139	2	2	6	6
UCP 4	$110.00	139	2	2	8	8
UCP 42	$110.00	139	3	2	8	8
USQ-A 24 PS	$225.00	61	5.5	28	6	3
USQ-A 24 SS	$200.00	61	5.5	28	6	3
USQ-A 30 PS	$250.00	61	6	34	6	3
USQ-A 30 SS	$225.00	61	6	34	6	3

SKU	List Price	Page #	Shipping Dimensions (inches)			
			Lbs	L	W	H
USQ-A 32 PS	$260.00	61	6.5	36	6	3
USQ-A 32 SS	$235.00	61	6.5	36	6	3
USQ-A 36 PS	$275.00	61	7	40	6	3
USQ-A 36 SS	$250.00	61	7	40	6	3
USQ-A 42 PS	$300.00	61	7.5	46	6	3
USQ-A 42 SS	$275.00	61	7.5	46	6	3
USQ-A 48 PS	$325.00	61	8	52	6	3
USQ-A 48 SS	$300.00	61	8	52	6	3
USQ-A 54 PS	$350.00	61	8.5	58	6	3
USQ-A 54 SS	$325.00	61	8.5	58	6	3
USQ-A 60 PS	$375.00	61	9	64	6	3
USQ-A 60 SS	$350.00	61	9	64	6	3
USQ-H 24 PS	$240.00	61	5.5	28	6	3
USQ-H 24 SS	$215.00	61	5.5	28	6	3
USQ-H 30 PS	$265.00	61	6	34	6	3
USQ-H 30 SS	$240.00	61	6	34	6	3
USQ-H 32 PS	$275.00	61	6.5	36	6	3
USQ-H 32 SS	$250.00	61	6.5	36	6	3
USQ-H 36 PS	$290.00	61	7	40	6	3
USQ-H 36 SS	$265.00	61	7	40	6	3
USQ-H 42 PS	$315.00	61	7.5	46	6	3
USQ-H 42 SS	$290.00	61	7.5	46	6	3
USQ-H 48 PS	$340.00	61	8	52	6	3
USQ-H 48 SS	$315.00	61	8	52	6	3
USQ-H 54 PS	$365.00	61	8.5	58	6	3
USQ-H 54 SS	$340.00	61	8.5	58	6	3
USQ-H 60 PS	$390.00	61	9	64	6	3
USQ-H 60 SS	$365.00	61	9	64	6	3
USQ-P 24 PS	$225.00	61	5.5	28	6	3
USQ-P 24 SS	$200.00	61	5.5	28	6	3
USQ-P 30 PS	$250.00	61	6	34	6	3
USQ-P 30 SS	$225.00	61	6	34	6	3
USQ-P 32 PS	$260.00	61	6.5	36	6	3
USQ-P 32 SS	$235.00	61	6.5	36	6	3
USQ-P 36 PS	$275.00	61	7	40	6	3
USQ-P 36 SS	$250.00	61	7	40	6	3
USQ-P 42 PS	$300.00	61	7.5	46	6	3
USQ-P 42 SS	$275.00	61	7.5	46	6	3
USQ-P 48 PS	$325.00	61	8	52	6	3
USQ-P 48 SS	$300.00	61	8	52	6	3
USQ-P 54 PS	$350.00	61	8.5	58	6	3
USQ-P 54 SS	$325.00	61	8.5	58	6	3
USQ-P 60 PS	$375.00	61	9	64	6	3
USQ-P 60 SS	$350.00	61	9	64	6	3

Price Sheet & Index

SKU	List Price	Page #	Shipping Dimensions (inches)			
			Lbs	L	W	H
UTIF-A 24 SS	$250.00	62	5.5	28	6	3
UTIF-A 30 SS	$275.00	62	6	34	6	3
UTIF-A 32 SS	$285.00	62	6.5	36	6	3
UTIF-A 36 SS	$300.00	62	7	40	6	3
UTIF-A 42 SS	$325.00	62	7.5	46	6	3
UTIF-A 48 SS	$350.00	62	8	52	6	3
UTIF-A 54 SS	$375.00	62	8.5	58	6	3
UTIF-A 60 SS	$400.00	62	9	64	6	3
UTIF-H 24 SS	$265.00	62	5.5	28	6	3
UTIF-H 30 SS	$290.00	62	6	34	6	3
UTIF-H 32 SS	$300.00	62	6.5	36	6	3
UTIF-H 36 SS	$315.00	62	7	40	6	3
UTIF-H 42 SS	$340.00	62	7.5	46	6	3
UTIF-H 48 SS	$365.00	62	8	52	6	3
UTIF-H 54 SS	$390.00	62	8.5	58	6	3
UTIF-H 60 SS	$415.00	62	9	64	6	3
UTIF-P 24 SS	$250.00	62	5.5	28	6	3
UTIF-P 30 SS	$275.00	62	6	34	6	3
UTIF-P 32 SS	$285.00	62	6.5	36	6	3
UTIF-P 36 SS	$300.00	62	7	40	6	3
UTIF-P 42 SS	$325.00	62	7.5	46	6	3
UTIF-P 48 SS	$350.00	62	8	52	6	3
UTIF-P 54 SS	$375.00	62	8.5	58	6	3
UTIF-P 60 SS	$400.00	62	9	64	6	3
V 4 BK	$345.00	81	2	7	7	7
V 4 ORB	$345.00	81	2	7	7	7
V 4 PS	$345.00	81	2	7	7	7
V 4 SB	$345.00	81	2	7	7	7
V 4 SS	$265.00	81	2	7	7	7
V 5 BK	$380.00	82	2	7	7	7
V 5 ORB	$380.00	82	2	7	7	7
V 5 PS	$380.00	82	2	7	7	7
V 5 SB	$380.00	82	2	7	7	7
V 5 SS	$295.00	82	2	7	7	7
VD 4-2A BK	$395.00	81	3	5	5	5
VD 4-2A ORB	$395.00	81	3	5	5	5
VD 4-2A PS	$395.00	81	3	5	5	5
VD 4-2A SB	$395.00	81	3	5	5	5
VD 4-2A SS	$315.00	81	3	5	5	5
VD 4-2H BK	$410.00	81	5	5	5	5
VD 4-2H ORB	$410.00	81	5	5	5	5
VD 4-2H PS	$410.00	81	5	5	5	5
VD 4-2H SB	$410.00	81	5	5	5	5
VD 4-2H SS	$330.00	81	5	5	5	5

SKU	List Price	Page #	Shipping Dimensions (inches)			
			Lbs	L	W	H
VD 4-2I BK	$410.00	81	5	5	5	5
VD 4-2I ORB	$410.00	81	5	5	5	5
VD 4-2I PS	$410.00	81	5	5	5	5
VD 4-2I SB	$410.00	81	5	5	5	5
VD 4-2I SS	$330.00	81	5	5	5	5
VD 4-2P BK	$395.00	81	3	5	5	5
VD 4-2P ORB	$395.00	81	3	5	5	5
VD 4-2P PS	$395.00	81	3	5	5	5
VD 4-2P SB	$395.00	81	3	5	5	5
VD 4-2P SS	$315.00	81	3	5	5	5
VD 5-2A BK	$430.00	82	3	6	6	6
VD 5-2A ORB	$430.00	82	3	6	6	6
VD 5-2A PS	$430.00	82	3	6	6	6
VD 5-2A SB	$430.00	82	3	6	6	6
VD 5-2A SS	$345.00	82	3	6	6	6
VD 5-2H BK	$445.00	82	6	6	6	6
VD 5-2H ORB	$445.00	82	6	6	6	6
VD 5-2H PS	$445.00	82	6	6	6	6
VD 5-2H SB	$445.00	82	6	6	6	6
VD 5-2H SS	$360.00	82	6	6	6	6
VD 5-2I BK	$445.00	82	6	6	6	6
VD 5-2I ORB	$445.00	82	6	6	6	6
VD 5-2I PS	$445.00	82	6	6	6	6
VD 5-2I SB	$445.00	82	6	6	6	6
VD 5-2I SS	$360.00	82	6	6	6	6
VD 5-2P BK	$430.00	82	3	6	6	6
VD 5-2P ORB	$430.00	82	3	6	6	6
VD 5-2P PS	$430.00	82	3	6	6	6
VD 5-2P SB	$430.00	82	3	6	6	6
VD 5-2P SS	$345.00	82	3	6	6	6
VD 5-3A BK	$500.00	82	5	9	9	7
VD 5-3A ORB	$500.00	82	5	9	9	7
VD 5-3A PS	$500.00	82	5	9	9	7
VD 5-3A SB	$500.00	82	5	9	9	7
VD 5-3A SS	$415.00	82	5	9	9	7
VD 5-3I BK	$500.00	82	10	9	9	7
VD 5-3I ORB	$500.00	82	10	9	9	7
VD 5-3I PS	$500.00	82	10	9	9	7
VD 5-3I SB	$500.00	82	10	9	9	7
VD 5-3I SS	$415.00	82	10	9	9	7
VD 5-3P BK	$500.00	82	5	9	9	7
VD 5-3P ORB	$500.00	82	5	9	9	7
VD 5-3P PS	$500.00	82	5	9	9	7
VD 5-3P SB	$500.00	82	5	9	9	7

Price Sheet & Index

SKU	List Price	Page #	Shipping Dimensions (inches)			
			Lbs	L	W	H
VD 5-3P SS	$415.00	82	5	9	9	7
VDB 4-A BK	$445.00	81	6	7	7	13
VDB 4-A ORB	$445.00	81	6	7	7	13
VDB 4-A PS	$445.00	81	6	7	7	13
VDB 4-A SB	$445.00	81	6	7	7	13
VDB 4-A SS	$365.00	81	6	7	7	13
VDB 4-P BK	$445.00	81	6	7	7	13
VDB 4-P ORB	$445.00	81	6	7	7	13
VDB 4-P PS	$445.00	81	6	7	7	13
VDB 4-P SB	$445.00	81	6	7	7	13
VDB 4-P SS	$365.00	81	6	7	7	13
VDB 4-S BK	$540.00	81	8	7	7	13
VDB 4-S ORB	$540.00	81	8	7	7	13
VDB 4-S PS	$540.00	81	8	7	7	13
VDB 4-S SB	$540.00	81	8	7	7	13
VDB 4-S SS	$460.00	81	8	7	7	13
VDB 5-A BK	$480.00	82	6	7	7	13
VDB 5-A ORB	$480.00	82	6	7	7	13
VDB 5-A PS	$480.00	82	6	7	7	13
VDB 5-A SB	$480.00	82	6	7	7	13
VDB 5-A SS	$395.00	82	6	7	7	13
VDB 5-P BK	$480.00	82	6	7	7	13
VDB 5-P ORB	$480.00	82	6	7	7	13
VDB 5-P PS	$480.00	82	6	7	7	13
VDB 5-P SB	$480.00	82	6	7	7	13
VDB 5-P SS	$395.00	82	6	7	7	13
VDB 5-S BK	$575.00	82	8	7	7	13
VDB 5-S ORB	$575.00	82	8	7	7	13
VDB 5-S PS	$575.00	82	8	7	7	13
VDB 5-S SB	$575.00	82	8	7	7	13
VDB 5-S SS	$490.00	82	8	7	7	13
VS 4 BK	$115.00	129	1	6	6	1
VS 4 ORB	$115.00	129	1	6	6	1
VS 4 PS	$115.00	129	1	6	6	1
VS 4 SB	$115.00	129	1	6	6	1
VS 4 SS	$85.00	129	1	6	6	1
VS 5 BK	$125.00	130	1	6	6	1
VS 5 ORB	$125.00	130	1	6	6	1
VS 5 PS	$125.00	130	1	6	6	1
VS 5 SB	$125.00	130	1	6	6	1
VS 5 SS	$95.00	130	1	6	6	1
W 4 BK	$425.00	87	2	7	7	7
W 4 ORB	$425.00	87	2	7	7	7
W 4 PS	$425.00	87	2	7	7	7

SKU	List Price	Page #	Shipping Dimensions (inches)			
			Lbs	L	W	H
W 4 SB	$425.00	87	2	7	7	7
W 4 SS	$330.00	87	2	7	7	7
W 5 BK	$450.00	88	2	7	7	7
W 5 ORB	$450.00	88	2	7	7	7
W 5 PS	$450.00	88	2	7	7	7
W 5 SB	$450.00	88	2	7	7	7
W 5 SS	$370.00	88	2	7	7	7
WA 6524 BK	$565.00	124	4	30	7	7
WA 6524 ORB	$565.00	124	4	30	7	7
WA 6524 PS	$565.00	124	4	30	7	7
WA 6524 SB	$565.00	124	4	30	7	7
WA 6524 SS	$405.00	124	4	30	7	7
WA 6532 BK	$765.00	124	5	37	7	7
WA 6532 ORB	$765.00	124	5	37	7	7
WA 6532 PS	$765.00	124	5	37	7	7
WA 6532 SB	$765.00	124	5	37	7	7
WA 6532 SS	$600.00	124	5	37	7	7
WA 6536 BK	$775.00	124	6	41	7	7
WA 6536 ORB	$775.00	124	6	41	7	7
WA 6536 PS	$775.00	124	6	41	7	7
WA 6536 SB	$775.00	124	6	41	7	7
WA 6536 SS	$610.00	124	6	41	7	7
WA 6542 BK	$875.00	124	7	47	7	7
WA 6542 ORB	$875.00	124	7	47	7	7
WA 6542 PS	$875.00	124	7	47	7	7
WA 6542 SB	$875.00	124	7	47	7	7
WA 6542 SS	$710.00	124	7	47	7	7
WA 6548 BK	$955.00	124	7	53	7	7
WA 6548 ORB	$955.00	124	7	53	7	7
WA 6548 PS	$955.00	124	7	53	7	7
WA 6548 SB	$955.00	124	7	53	7	7
WA 6548 SS	$790.00	124	7	53	7	7
WA 6560 BK	$1,085.00	124	8	65	7	7
WA 6560 ORB	$1,085.00	124	8	65	7	7
WA 6560 PS	$1,085.00	124	8	65	7	7
WA 6560 SB	$1,085.00	124	8	65	7	7
WA 6560 SS	$930.00	124	8	65	7	7
WD 4-2A BK	$475.00	87	3	5	5	5
WD 4-2A ORB	$475.00	87	3	5	5	5
WD 4-2A PS	$475.00	87	3	5	5	5
WD 4-2A SB	$475.00	87	3	5	5	5
WD 4-2A SS	$380.00	87	3	5	5	5
WD 4-2H BK	$490.00	87	5	5	5	5
WD 4-2H ORB	$490.00	87	5	5	5	5

Price Sheet & Index

SKU	List Price	Page #	Shipping Dimensions (inches)			
			Lbs	L	W	H
WD 4-2H PS	$490.00	87	5	5	5	5
WD 4-2H SB	$490.00	87	5	5	5	5
WD 4-2H SS	$395.00	87	5	5	5	5
WD 4-2I BK	$490.00	87	5	5	5	5
WD 4-2I ORB	$490.00	87	5	5	5	5
WD 4-2I PS	$490.00	87	5	5	5	5
WD 4-2I SB	$490.00	87	5	5	5	5
WD 4-2I SS	$395.00	87	5	5	5	5
WD 4-2P BK	$475.00	87	3	5	5	5
WD 4-2P ORB	$475.00	87	3	5	5	5
WD 4-2P PS	$475.00	87	3	5	5	5
WD 4-2P SB	$475.00	87	3	5	5	5
WD 4-2P SS	$380.00	87	3	5	5	5
WD 5-2A BK	$500.00	88	3	6	6	6
WD 5-2A ORB	$500.00	88	3	6	6	6
WD 5-2A PS	$500.00	88	3	6	6	6
WD 5-2A SB	$500.00	88	3	6	6	6
WD 5-2A SS	$420.00	88	3	6	6	6
WD 5-2H BK	$515.00	88	6	6	6	6
WD 5-2H ORB	$515.00	88	6	6	6	6
WD 5-2H PS	$515.00	88	6	6	6	6
WD 5-2H SB	$515.00	88	6	6	6	6
WD 5-2H SS	$435.00	88	6	6	6	6
WD 5-2I BK	$515.00	88	6	6	6	6
WD 5-2I ORB	$515.00	88	6	6	6	6
WD 5-2I PS	$515.00	88	6	6	6	6
WD 5-2I SB	$515.00	88	6	6	6	6
WD 5-2I SS	$435.00	88	6	6	6	6
WD 5-2P BK	$500.00	88	3	6	6	6
WD 5-2P ORB	$500.00	88	3	6	6	6
WD 5-2P PS	$500.00	88	3	6	6	6
WD 5-2P SB	$500.00	88	3	6	6	6
WD 5-2P SS	$420.00	88	3	6	6	6
WD 5-3A BK	$570.00	88	5	9	9	7
WD 5-3A ORB	$570.00	88	5	9	9	7
WD 5-3A PS	$570.00	88	5	9	9	7
WD 5-3A SB	$570.00	88	5	9	9	7
WD 5-3A SS	$470.00	88	5	9	9	7
WD 5-3I BK	$570.00	88	10	9	9	7
WD 5-3I ORB	$570.00	88	10	9	9	7
WD 5-3I PS	$570.00	88	10	9	9	7
WD 5-3I SB	$570.00	88	10	9	9	7
WD 5-3I SS	$470.00	88	10	9	9	7
WD 5-3P BK	$570.00	88	5	9	9	7

SKU	List Price	Page #	Shipping Dimensions (inches)			
			Lbs	L	W	H
WD 5-3P ORB	$570.00	88	5	9	9	7
WD 5-3P PS	$570.00	88	5	9	9	7
WD 5-3P SB	$570.00	88	5	9	9	7
WD 5-3P SS	$470.00	88	5	9	9	7
WDB 4-A BK	$525.00	87	6	7	7	13
WDB 4-A ORB	$525.00	87	6	7	7	13
WDB 4-A PS	$525.00	87	6	7	7	13
WDB 4-A SB	$525.00	87	6	7	7	13
WDB 4-A SS	$430.00	87	6	7	7	13
WDB 4-P BK	$525.00	87	6	7	7	13
WDB 4-P ORB	$525.00	87	6	7	7	13
WDB 4-P PS	$525.00	87	6	7	7	13
WDB 4-P SB	$525.00	87	6	7	7	13
WDB 4-P SS	$430.00	87	6	7	7	13
WDB 4-S BK	$620.00	87	8	7	7	13
WDB 4-S ORB	$620.00	87	8	7	7	13
WDB 4-S PS	$620.00	87	8	7	7	13
WDB 4-S SB	$620.00	87	8	7	7	13
WDB 4-S SS	$525.00	87	8	7	7	13
WDB 5-A BK	$550.00	88	6	7	7	13
WDB 5-A ORB	$550.00	88	6	7	7	13
WDB 5-A PS	$550.00	88	6	7	7	13
WDB 5-A SB	$550.00	88	6	7	7	13
WDB 5-A SS	$470.00	88	6	7	7	13
WDB 5-P BK	$550.00	88	6	7	7	13
WDB 5-P ORB	$550.00	88	6	7	7	13
WDB 5-P PS	$550.00	88	6	7	7	13
WDB 5-P SB	$550.00	88	6	7	7	13
WDB 5-P SS	$470.00	88	6	7	7	13
WDB 5-S BK	$645.00	88	8	7	7	13
WDB 5-S ORB	$645.00	88	8	7	7	13
WDB 5-S PS	$645.00	88	8	7	7	13
WDB 5-S SB	$645.00	88	8	7	7	13
WDB 5-S SS	$565.00	88	8	7	7	13
WKEY	$5.00	140	1	4	4	4
WS 4 BK	$195.00	129	1	6	6	1
WS 4 ORB	$195.00	129	1	6	6	1
WS 4 PS	$195.00	129	1	6	6	1
WS 4 SB	$195.00	129	1	6	6	1
WS 4 SS	$150.00	129	1	6	6	1
WS 5 BK	$195.00	130	1	6	6	1
WS 5 ORB	$195.00	130	1	6	6	1
WS 5 PS	$195.00	130	1	6	6	1
WS 5 SB	$195.00	130	1	6	6	1

Price Sheet & Index

SKU	List Price	Page #	Shipping Dimensions (inches)			
			Lbs	L	W	H
WS 5 SS	$170.00	130	1	4	5	1
X 4 BK	$345.00	70	2	7	7	7
X 4 ORB	$345.00	70	2	7	7	7
X 4 PS	$345.00	70	2	7	7	7
X 4 SB	$345.00	70	2	7	7	7
X 4 SS	$265.00	70	2	7	7	7
X 5 BK	$380.00	70	2	7	7	7
X 5 ORB	$380.00	70	2	7	7	7
X 5 PS	$380.00	70	2	7	7	7
X 5 SB	$380.00	70	2	7	7	7
X 5 SS	$295.00	70	2	7	7	7
XC 12532 BK	$470.00	127	6	44	7	7
XC 12532 ORB	$470.00	127	6	44	7	7
XC 12532 PS	$470.00	127	6	44	7	7
XC 12532 SB	$470.00	127	6	44	7	7
XC 12532 SS	$370.00	127	6	44	7	7
XC 12536 BK	$490.00	127	7	44	7	7
XC 12536 ORB	$490.00	127	7	44	7	7
XC 12536 PS	$490.00	127	7	44	7	7
XC 12536 SB	$490.00	127	7	44	7	7
XC 12536 SS	$390.00	127	7	44	7	7
XC 12542 BK	$510.00	127	7	44	7	7
XC 12542 ORB	$510.00	127	7	44	7	7
XC 12542 PS	$510.00	127	7	44	7	7
XC 12542 SB	$510.00	127	7	44	7	7
XC 12542 SS	$410.00	127	7	44	7	7
XC 12548 BK	$585.00	127	8	53	7	7
XC 12548 ORB	$585.00	127	8	53	7	7
XC 12548 PS	$585.00	127	8	53	7	7
XC 12548 SB	$585.00	127	8	53	7	7
XC 12548 SS	$485.00	127	8	53	7	7
XC 12560 BK	$610.00	127	9	65	7	7
XC 12560 ORB	$610.00	127	9	65	7	7
XC 12560 PS	$610.00	127	9	65	7	7
XC 12560 SB	$610.00	127	9	65	7	7
XC 12560 SS	$510.00	127	9	65	7	7
XC 6532 BK	$325.00	123	5	44	7	7
XC 6532 ORB	$325.00	123	5	44	7	7
XC 6532 PS	$325.00	123	5	44	7	7
XC 6532 SB	$325.00	123	5	44	7	7
XC 6532 SS	$280.00	123	5	44	7	7
XC 6536 BK	$355.00	123	5	44	7	7
XC 6536 ORB	$355.00	123	5	44	7	7
XC 6536 PS	$355.00	123	5	44	7	7

SKU	List Price	Page #	Shipping Dimensions (inches)			
			Lbs	L	W	H
XC 6536 SB	$355.00	123	5	44	7	7
XC 6536 SS	$305.00	123	5	44	7	7
XC 6542 BK	$370.00	123	6	44	7	7
XC 6542 ORB	$370.00	123	6	44	7	7
XC 6542 PS	$370.00	123	6	44	7	7
XC 6542 SB	$370.00	123	6	44	7	7
XC 6542 SS	$320.00	123	6	44	7	7
XC 6548 BK	$400.00	123	6	53	7	7
XC 6548 ORB	$400.00	123	6	53	7	7
XC 6548 PS	$400.00	123	6	53	7	7
XC 6548 SB	$400.00	123	6	53	7	7
XC 6548 SS	$340.00	123	6	53	7	7
XC 6560 BK	$455.00	123	7	65	7	7
XC 6560 ORB	$455.00	123	7	65	7	7
XC 6560 PS	$455.00	123	7	65	7	7
XC 6560 SB	$455.00	123	7	65	7	7
XC 6560 SS	$410.00	123	7	65	7	7
XD 4-2A BK	$395.00	69	3	5	5	5
XD 4-2A ORB	$395.00	69	3	5	5	5
XD 4-2A PS	$395.00	69	3	5	5	5
XD 4-2A SB	$395.00	69	3	5	5	5
XD 4-2A SS	$315.00	69	3	5	5	5
XD 4-2H BK	$410.00	69	5	5	5	5
XD 4-2H ORB	$410.00	69	5	5	5	5
XD 4-2H PS	$410.00	69	5	5	5	5
XD 4-2H SB	$410.00	69	5	5	5	5
XD 4-2H SS	$330.00	69	5	5	5	5
XD 4-2I BK	$410.00	69	5	5	5	5
XD 4-2I ORB	$410.00	69	5	5	5	5
XD 4-2I PS	$410.00	69	5	5	5	5
XD 4-2I SB	$410.00	69	5	5	5	5
XD 4-2I SS	$330.00	69	5	5	5	5
XD 4-2P BK	$395.00	69	3	5	5	5
XD 4-2P ORB	$395.00	69	3	5	5	5
XD 4-2P PS	$395.00	69	3	5	5	5
XD 4-2P SB	$395.00	69	3	5	5	5
XD 4-2P SS	$315.00	69	3	5	5	5
XD 5-2A BK	$430.00	70	3	6	6	6
XD 5-2A ORB	$430.00	70	3	6	6	6
XD 5-2A PS	$430.00	70	3	6	6	6
XD 5-2A SB	$430.00	70	3	6	6	6
XD 5-2A SS	$345.00	70	3	6	6	6
XD 5-2H BK	$445.00	70	6	6	6	6
XD 5-2H ORB	$445.00	70	6	6	6	6

Price Sheet & Index

SKU	List Price	Page #	Shipping Dimensions (inches)			
			Lbs	L	W	H
XD 5-2H PS	$445.00	70	6	6	6	6
XD 5-2H SB	$445.00	70	6	6	6	6
XD 5-2H SS	$360.00	70	6	6	6	6
XD 5-2I BK	$445.00	70	6	6	6	6
XD 5-2I ORB	$445.00	70	6	6	6	6
XD 5-2I PS	$445.00	70	6	6	6	6
XD 5-2I SB	$445.00	70	6	6	6	6
XD 5-2I SS	$360.00	70	6	6	6	6
XD 5-2P BK	$430.00	70	3	6	6	6
XD 5-2P ORB	$430.00	70	3	6	6	6
XD 5-2P PS	$430.00	70	3	6	6	6
XD 5-2P SB	$430.00	70	3	6	6	6
XD 5-2P SS	$345.00	70	3	6	6	6
XD 5-3A BK	$500.00	70	5	9	9	7
XD 5-3A ORB	$500.00	70	5	9	9	7
XD 5-3A PS	$500.00	70	5	9	9	7
XD 5-3A SB	$500.00	70	5	9	9	7
XD 5-3A SS	$415.00	70	5	9	9	7
XD 5-3I BK	$500.00	70	10	9	9	7
XD 5-3I ORB	$500.00	70	10	9	9	7
XD 5-3I PS	$500.00	70	10	9	9	7
XD 5-3I SB	$500.00	70	10	9	9	7
XD 5-3I SS	$415.00	70	10	9	9	7
XD 5-3P BK	$500.00	70	5	9	9	7
XD 5-3P ORB	$500.00	70	5	9	9	7
XD 5-3P PS	$500.00	70	5	9	9	7
XD 5-3P SB	$500.00	70	5	9	9	7
XD 5-3P SS	$415.00	70	5	9	9	7
XDB 4-A BK	$445.00	69	6	7	7	13
XDB 4-A ORB	$445.00	69	6	7	7	13
XDB 4-A PS	$445.00	69	6	7	7	13
XDB 4-A SB	$445.00	69	6	7	7	13
XDB 4-A SS	$365.00	69	6	7	7	13
XDB 4-P BK	$445.00	69	6	7	7	13
XDB 4-P ORB	$445.00	69	6	7	7	13
XDB 4-P PS	$445.00	69	6	7	7	13
XDB 4-P SB	$445.00	69	6	7	7	13
XDB 4-P SS	$365.00	69	6	7	7	13
XDB 4-S BK	$540.00	69	8	7	7	13
XDB 4-S ORB	$540.00	69	8	7	7	13
XDB 4-S PS	$540.00	69	8	7	7	13
XDB 4-S SB	$540.00	69	8	7	7	13
XDB 4-S SS	$460.00	69	8	7	7	13
XDB 5-A BK	$480.00	70	6	7	7	13

SKU	List Price	Page #	Shipping Dimensions (inches)			
			Lbs	L	W	H
XDB 5-A ORB	$480.00	70	6	7	7	13
XDB 5-A PS	$480.00	70	6	7	7	13
XDB 5-A SB	$480.00	70	6	7	7	13
XDB 5-A SS	$395.00	70	6	7	7	13
XDB 5-P BK	$480.00	70	6	7	7	13
XDB 5-P ORB	$480.00	70	6	7	7	13
XDB 5-P PS	$480.00	70	6	7	7	13
XDB 5-P SB	$480.00	70	6	7	7	13
XDB 5-P SS	$395.00	70	6	7	7	13
XDB 5-S BK	$575.00	70	8	7	7	13
XDB 5-S ORB	$575.00	70	8	7	7	13
XDB 5-S PS	$575.00	70	8	7	7	13
XDB 5-S SB	$575.00	70	8	7	7	13
XDB 5-S SS	$490.00	70	8	7	7	13
XS 4 BK	$115.00	129	1	6	6	1
XS 4 ORB	$115.00	129	1	6	6	1
XS 4 PS	$115.00	129	1	6	6	1
XS 4 SB	$115.00	129	1	6	6	1
XS 4 SS	$85.00	129	1	6	6	1
XS 5 BK	$125.00	129	1	6	6	1
XS 5 ORB	$125.00	129	1	6	6	1
XS 5 PS	$125.00	129	1	6	6	1
XS 5 SB	$125.00	129	1	6	6	1
XS 5 SS	$95.00	129	1	6	6	1
Z SIKA	$10.00	119	2	7	7	4